WWW.MILL-MAX.COM

BOARD-TO-BOARD INTERCONNECTS

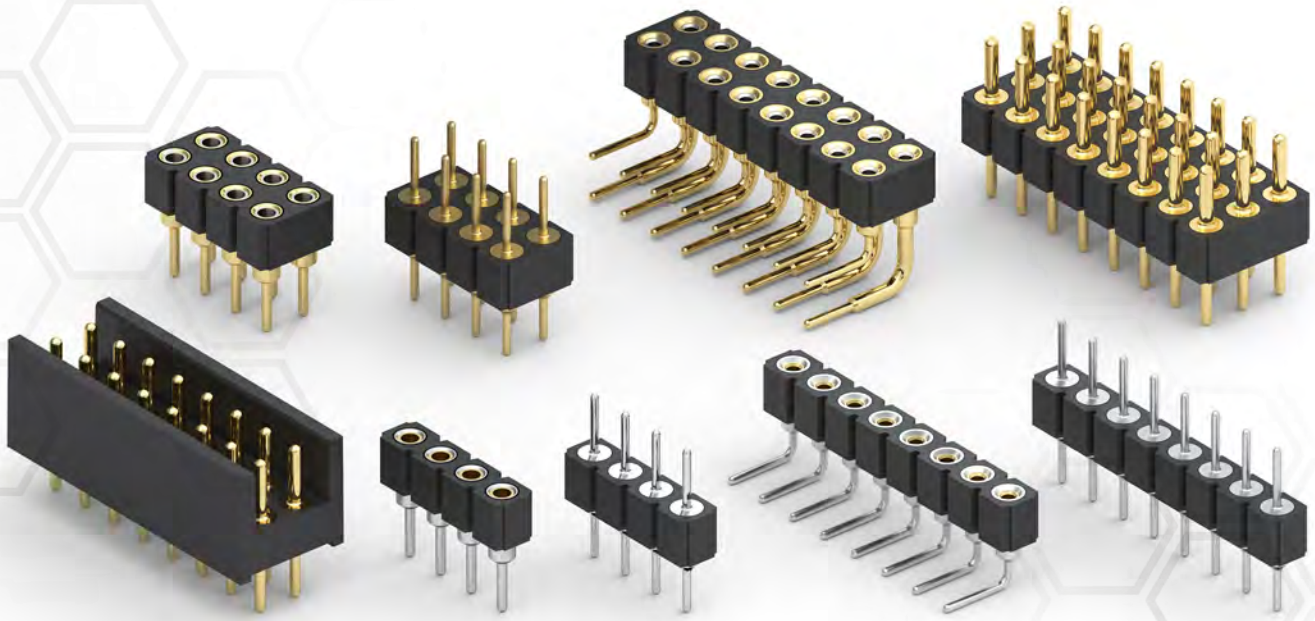

WWW.MILL-MAX.COM

MILL-MAX HEADER AND SOCKET INTERCONNECTS OFFER AN IDEAL SOLUTION TO THE BOARD-TO-BOARD INTERCONNECT CHALLENGES THAT DESIGN ENGINEERS FACE EVERY DAY. We offer a variety of options to accommodate everything from space-saving, fine-pitch requirements, to larger, more robust applications in which products are subjected to harsh environments including significant shock and vibration. By mating different combinations of headers and sockets, a wide range of board-to-board spacing can be achieved.

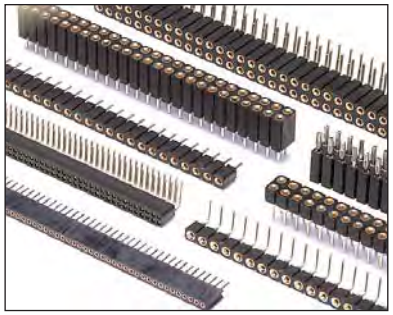

MILL-MAX CONNECTORS ARE AVAILABLE IN THE FOLLOWING CONFIGURATIONS:

- Pluggable using a mating socket and header
- Permanent by soldering a through-hole header to both boards
- Fine pitch from 2mm down to 1mm pin-to-pin spacing
- Surface mount headers and sockets
- Right angle
- Multiple board stacking using Organic Fiber Plug® pass-through sockets
- Horizontal "Z-Bend" SMT
- Wire Termination: Soldercup, Turret, Slotted
- Solderless Press-fit

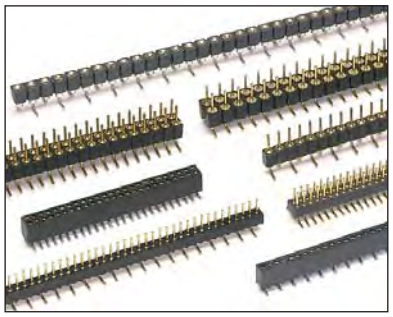

Mill-Max Mfg. Corp. • 190 Pine Hollow Road, P.O. Box 300, Oyster Bay, NY 11771 • 516-922-6000 • Fax: 516-922-9253 • www.mill-max.com

CUSTOM INSULATORS

NEED A SOCKET OR HEADER IN A UNIQUE CONFIGURATION?

Mill-Max can manufacture custom insulators to your exacting specifications, saving you money for high volume runs.

When your product's in high demand, the most cost-effective way to produce a custom connector insulator is to mold it. Mill-Max can mold* insulators out of PCT, Nylon, PPS or LCP, depending on the environmental, mechanical, electrical and thermal requirements of your application.

If you have a high-volume connector application, Mill-Max can provide a superior molded insulator solution that will keep your costs in check.

In addition, Mill-Max's utilization of FR-4 epoxy material, in combination with standard pins/receptacles, makes this kind of customization a quick and efficient process for both prototype and volume production.

FR-4 insulators offered in standard thicknesses of .020", .031", .047", .062", .093" and .125" are best suited for single plane designs. Mill-Max can turn around a socket, header or spring pin connector typically in 2-4 weeks or less! (Provided that a standard receptacle or pin with a press-fit feature is used.)

Please contact us with your custom application by completing our Custom Product Worksheet on page 247.

* A one-time partial tooling charge is assessed in order to cover the costs associated with building a custom mold tool.

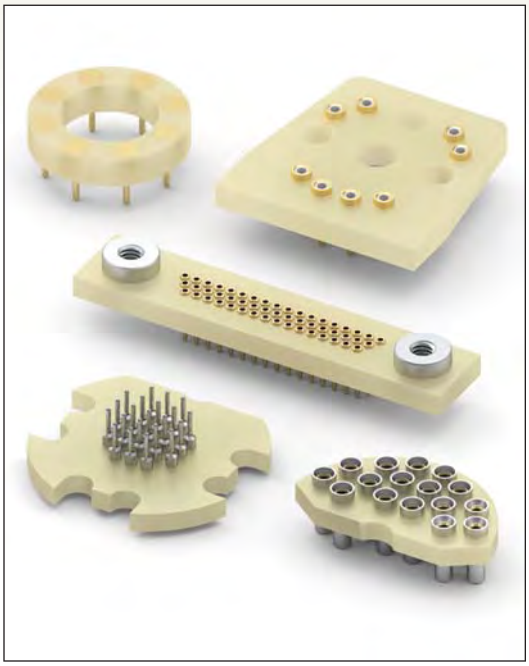

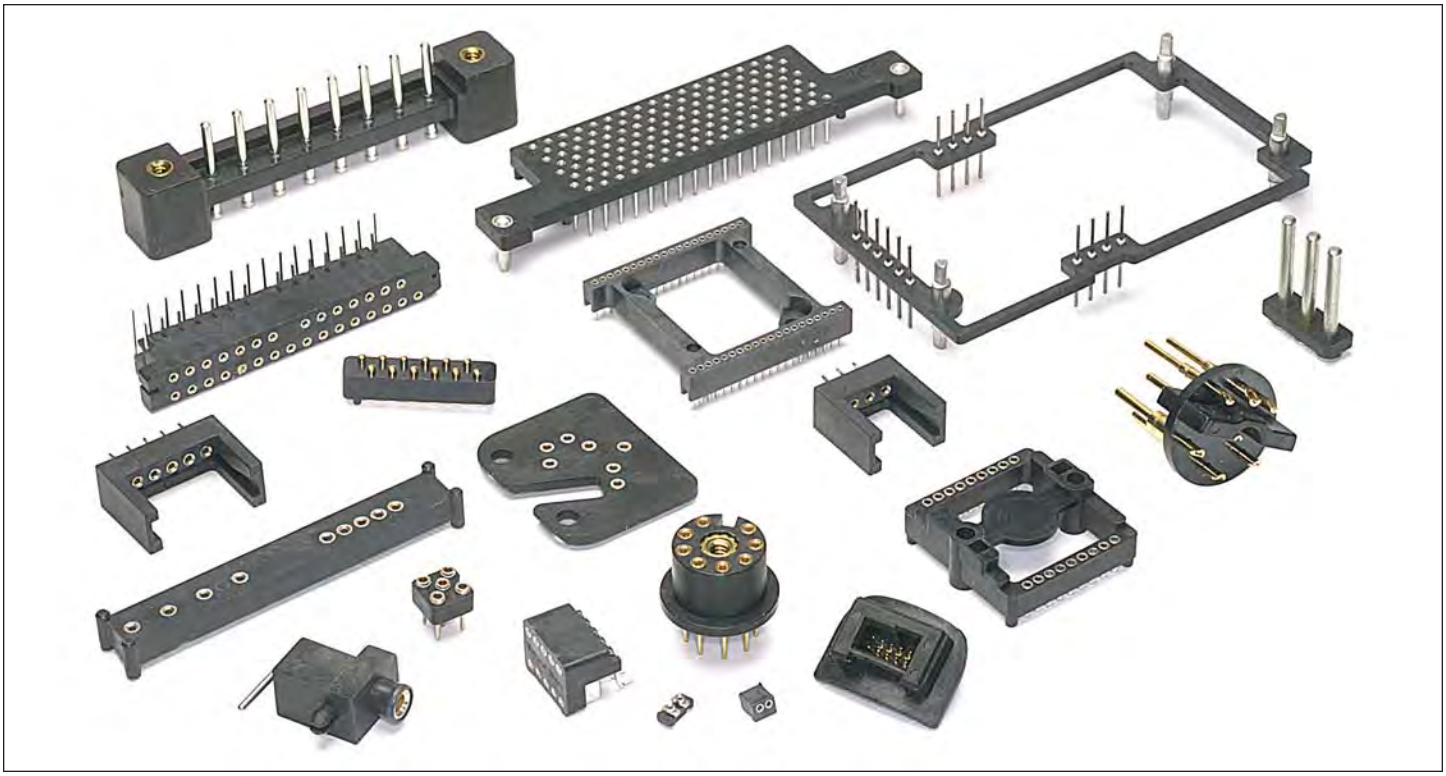

MILL-MAX Mill-Max Mfg. Corp. • 190 Pine Hollow Road, P.O. Box 300, Oyster Bay, NY 11771 • 516-922-6000 • Fax: 516-922-9253 • www.mill-max.com

SERIES 891 & 893 • 1mm GRID SURFACE MOUNT • MALE AND FEMALE CONNECTORS

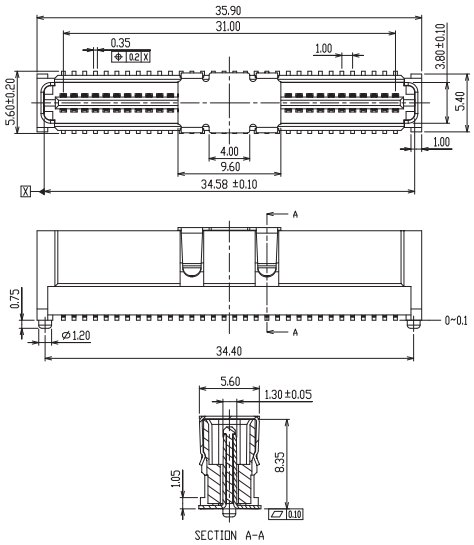

FIG. 1

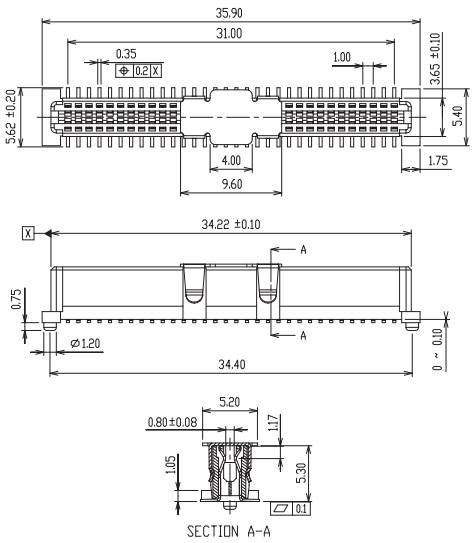

FIG. 2

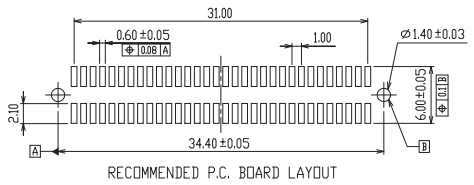

- 64 Position Mezzanine Connectors for board stacking
- 1 mm Centerline high density packaging
- Mated connector board stacking height of 10 mm
- Conforms to EIA-700 AAAB for IEEE 1386 applictions
- Tape & Reel packaged per EIA-783 (56 mm wide; 16 mm pitch)
- Insulators are high temperature thermoplastic, suitable for all soldering operations

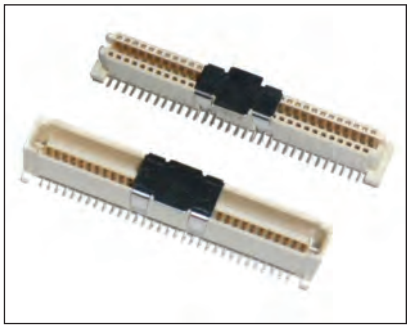

ORDERING INFORMATION

FIG. 1	**Series 891...120**	**1mm Surface Mount Male Connector**
	891-10-064-30-120000 **Tape and Reel Packaging:** 400 Parts per 13" reel	
FIG. 2	**Series 893...420**	**1mm Surface Mount Female Connector**
	893-43-064-30-420000 **Tape and Reel Packaging:** 600 Parts per 13" reel	

Technical Specifications

RoHS-2 2011/65/EU

Materials:

Terminals and Contacts: Phosphor Bronze
Plating: Contact area - 30 µ" Gold over Nickel
Solder Terminals - 75 µ" Tin over Nickel
Vacuum Cap: Stainless Steel
Insulator Material: High temperature glass filled LCP, rated UL 94V-0

Ratings:

Current: (30° C Temperature Rise): 0.5 A max., all circuits wired in series (1.0A max., five adjacent circuits wired in series)
Voltage: 250V AC (RMS) (contact to contact)
Operating Temperature Range: -55° C - +85° C

Electrical:

Contact resistance: 30mΩ max.
Insulation resistance: 1,000 MΩ min.
Dielectric Withstanding Voltage: 250V AC for one minute @ sea level

Mechanical:

Vibration: No discontinuity > 1 ms per MIL-STD 202, Method 201
Physical Shock: No discontinuity > 1 µs per EIA 364-27 Test Condition H
Durability: 100 cycles min. per EIA 364-09
Mating Force: 60 g/terminal max. per EIA 364-13
Separation Force: 23 g/terminal min. per EIA 364-13
Contact Retention Force: .4Kg min. per EIA 364-35

Environmental:

Thermal Shock: Per EIA 364-32, Test Condition I
Humidity: Test conditions - Ambient temp. 40±2°C; Relative humidity: 90 - 95%; Duration: 96 Hrs.
Post Humidity Inspection - 1. No damage
2. Contact resistance change < 15 mΩ
3. Insulation Resistance: 100 MΩ min.
Solderability: Per EIA 364-52 Category 2

MILL-MAX Mill-Max Mfg. Corp. • 190 Pine Hollow Road, P.O. Box 300, Oyster Bay, NY 11771 • 516-922-6000 • Fax: 516-922-9253 • www.mill-max.com

SERIES 860 & 861 • 1mm GRID HEADERS AND SOCKETS • SINGLE ROW STRIPS

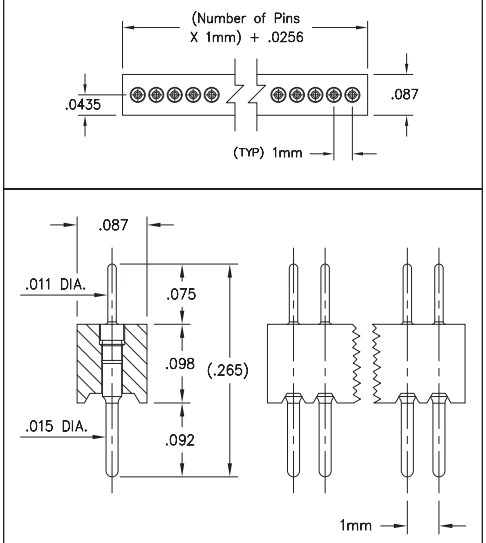

FIG. 1

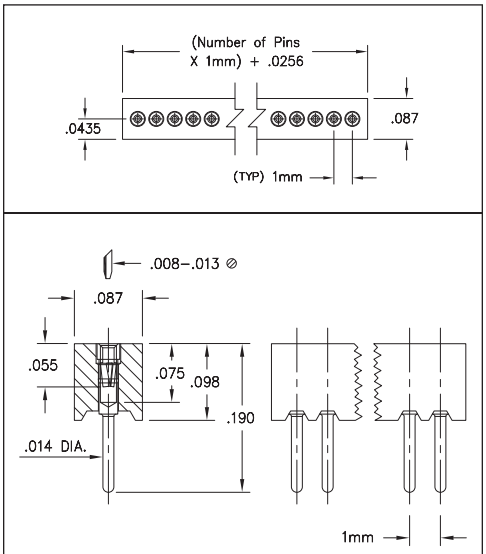

FIG. 2

- Series 860 headers and Series 861 sockets are single row, 1mm pitch interconnects rated at 2 amps
- Series 860 headers have .015" diameter solder tails and .011" diameter pluggable pins (MM #3039) See page 208 for details
- Series 861 sockets have .014" diameter solder tails (MM #0439). See page 156 for details
- Both 860 headers and 861 sockets are available in 2-50 position strips
- The header and socket provide a mated height of .196" for board stacking applications
- Insulators are high temperature thermoplastic, suitable for most soldering processes, and feature standoffs to promote solder flow

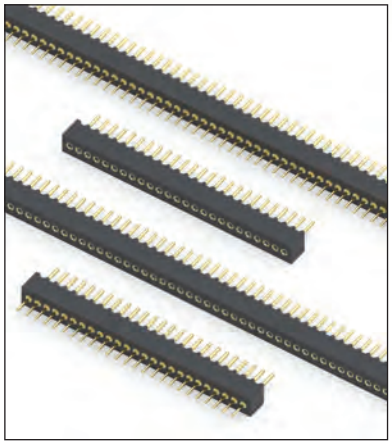

ORDERING INFORMATION

FIG. 1 — **Series 860...002** — **Single Row 1mm Header**

860-10-0__-10-002000

Specify number of pins — 02-50

RoHS-2 2011/65/EU

XX=Plating Code See Below

For Electrical, Mechanical & Enviromental Data, See page 264

SPECIFY PLATING CODE XX=	10 ◆			
Pin Plating	10 µ" Au			

FIG. 2 — **Series 861...002** — **Single Row 1mm Socket**

861-13-0__-10-002000

Specify number of pins — 02-50

RoHS-2 2011/65/EU

XX=Plating Code See Below

For Electrical, Mechanical & Enviromental Data, See page 264

SPECIFY PLATING CODE XX=	13 ◆						
Sleeve (Pin)	10 µ" Au						
Contact (Clip)	30 µ" Au						

SERIES 860 & 861 • 1mm GRID SURFACE MOUNT GULL WING HEADERS & SOCKETS • SINGLE ROW STRIPS

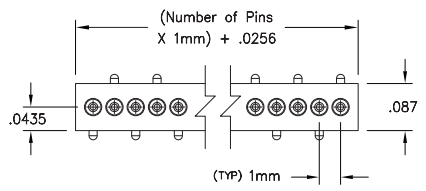

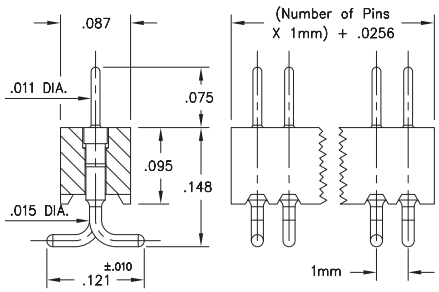

Coplanarity .005". For pin counts >20 positions, consult Technical Support.

FIG. 1

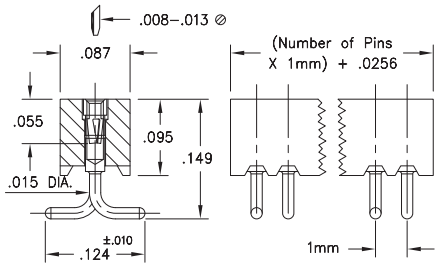

Coplanarity .005". For pin counts >20 positions, consult Technical Support.

FIG. 2

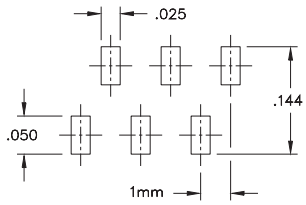

Footprint

- Series 860 surface mount gull wing headers have .011" dia. pluggable pins for Surface Mount soldering to the P.C.B. (MM #3039). See page 208 for details
- Series 861 surface mount gull wing sockets uses MM #0439 receptacles that accept pin diameters from .008"-.013". See page 156 for details
- Receptacles use Hi-Rel, 3-finger BeCu #04 contact rated at 2 amps. See page 250 for details
- Insulators are high temperature thermoplastic, suitable for all soldering operations

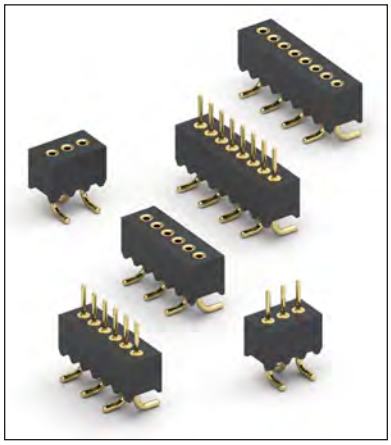

ORDERING INFORMATION

FIG. 1 — **Series 860...002** — **Single Row Surface Mount Header**

860-10-0_ _-30-002000

Specify number of pins → 03-26

RoHS-2 2011/65/EU

XX=Plating Code See Below

For Electrical, Mechanical & Enviromental Data, See page 264

SPECIFY PLATING CODE XX=	10 ◆			
Pin Plating	10 µ" Au			

FIG. 2 — **Series 861...002** — **Single Row Surface Mount Socket**

861-13-0_ _-30-002000

Specify number of pins → 03-26

RoHS-2 2011/65/EU

XX=Plating Code See Below

For Electrical, Mechanical & Enviromental Data, See page 264

SPECIFY PLATING CODE XX=		13 ◆					
Sleeve (Pin)		10 µ" Au					
Contact (Clip)		30 µ" Au					

MILL-MAX® Mill-Max Mfg. Corp. • 190 Pine Hollow Road, P.O. Box 300, Oyster Bay, NY 11771 • 516-922-6000 • Fax: 516-922-9253 • www.mill-max.com

INTERCONNECTS

SERIES 850, 851, 852, 853 • .050" GRID HEADERS AND SOCKETS • SINGLE AND DOUBLE ROW STRIPS

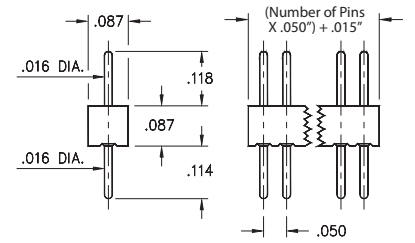

FIG. 1

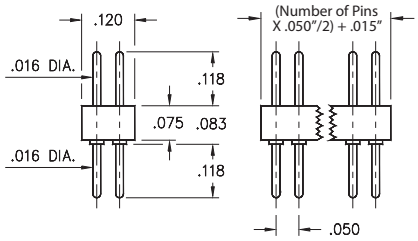

FIG. 2

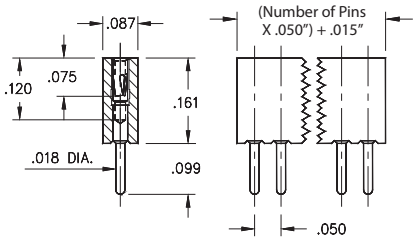

FIG. 3

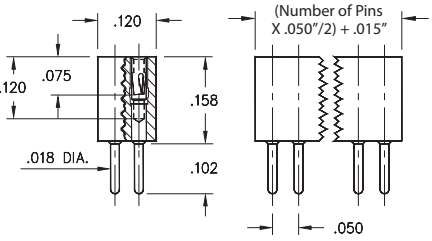

FIG. 4

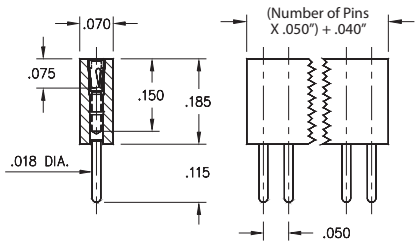

FIG. 5

- Series 850, 851, 852, 853 single and double row interconnects have .050" pin spacing and permit board stacking as low as .248"
- Pin headers have .016" dia. pins (MM #4006-0) See page 208 for details
- MM #0467 and MM #4890 receptacles use Hi-Rel, 3-finger BeCu #11 contact rated at 3 amps. (#11 contact accepts pin diameters from .015"-.020"). See pages 158 and 160 for details
- Insulators are high temperature thermoplastic, suitable for all soldering operations

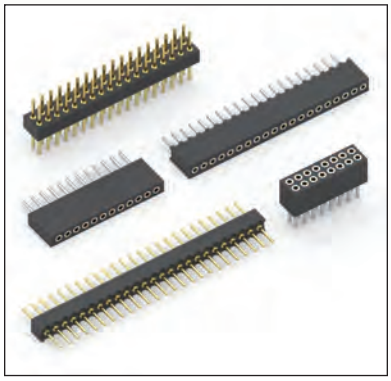

ORDERING INFORMATION

FIG. 1	**Series 850...001**	**Single Row .087" Profile Pin Header**
	850-XX-0_ _-10-001000	
	Specify number of pins	01-50
FIG. 2	**Series 852...001**	**Double Row .083" Profile Pin Header**
	852-XX-_ _ _-10-001000	
	Specify number of pins	004-100

RoHS-2 2011/65/EU

XX=Plating Code See Below

For Electrical, Mechanical & Enviromental Data, See page 264

SPECIFY PLATING CODE XX=	10 ◆	90	40 ◆	
Pin Plating	10 µ" Au	200 µ" Sn/Pb	200 µ" Sn	

FIG. 3	**Series 851...001**	**Single Row .161" Profile Socket**
	851-XX-0_ _-10-001000	
	Specify number of pins	01-50
FIG. 4	**Series 853...001**	**Double Row .161" Profile Socket**
	853-XX-_ _ _-10-001000	
	Specify number of pins	004-100
FIG. 5	**Series 851...002**	**Single Row .185" Profile Socket**
	851-XX-0_ _-10-002000	
	Specify number of pins	01-77

RoHS-2 2011/65/EU

XX=Plating Code See Below

For Electrical, Mechanical & Enviromental Data, See page 264

SPECIFY PLATING CODE XX=		91	93	99	41 ◆	43 ◆	47 ◆
Sleeve (Pin)		200 µ" Sn/Pb	200 µ" Sn/Pb	200 µ" Sn/Pb	200 µ" Sn	200 µ" Sn	200 µ" Sn
Contact (Clip)		10 µ" Au	30 µ" Au	100 µ" Sn/Pb	10 µ" Au	30 µ" Au	Au Flash

MILL-MAX Mill-Max Mfg. Corp. • 190 Pine Hollow Road, P.O. Box 300, Oyster Bay, NY 11771 • 516-922-6000 • Fax: 516-922-9253 • www.mill-max.com

SERIES 851 & 853 • .050" GRID LONG TAIL SOCKETS • SINGLE AND DOUBLE ROW STRIPS

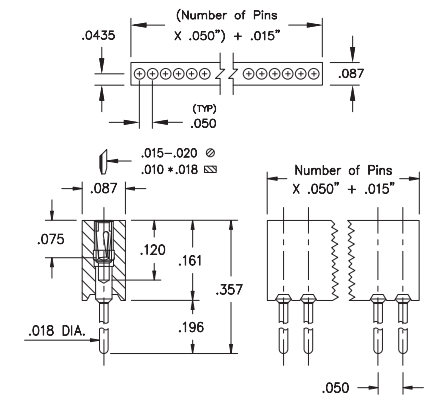

FIG. 1

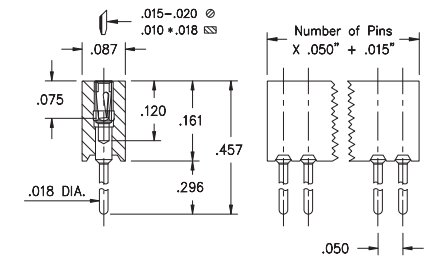

FIG. 2

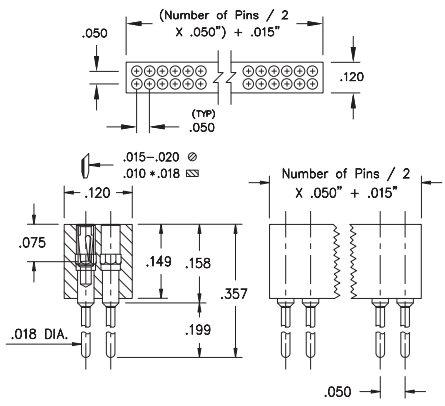

FIG. 3

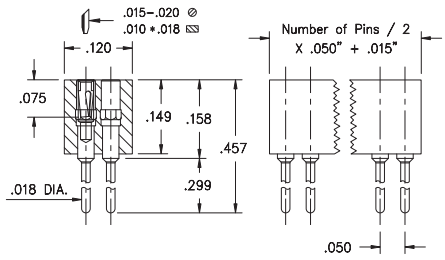

FIG. 4

- Series 851...011 and 853...011 use MM #4890-1 pins. See page 160 for details
- Series 851...021 and 853...021 use MM #4890-2 pins. See page 160 for details
- Receptacles use Hi-Rel, 3-finger BeCu #11 contact rated at 3 amps. (#11 contact accepts pin diameters from .015"-.020"). See page 251 for details
- Insulators are high temperature thermoplastic, suitable for all soldering operations

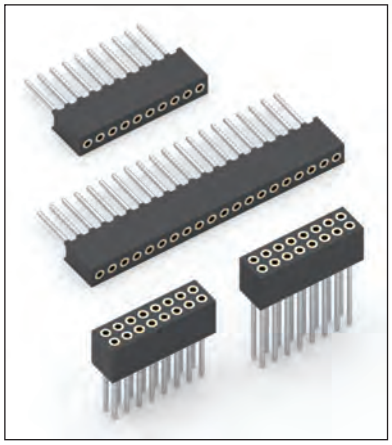

ORDERING INFORMATION

FIG. 1	**Series 851...011**	**Single Row Socket**
	851-XX-0_ _-10-011000 **Specify number of pins** ↑ 01-50	
FIG. 2	**Series 851...021**	**Single Row Socket**
	851-XX-0_ _-10-021000 **Specify number of pins** ↑ 01-50	
FIG. 3	**Series 853...011**	**Double Row Socket**
	853-XX-_ _ _-10-011000 **Specify number of pins** ↑ 004-100	
FIG. 4	**Series 853...021**	**Double Row Socket**
	853-XX-_ _ _-10-021000 **Specify number of pins** ↑ 004-100	

RoHS-2 2011/65/EU

XX=Plating Code See Below

For Electrical, Mechanical & Enviromental Data, See page 264

SPECIFY PLATING CODE XX=					41 ◆	43 ◆	
Sleeve (Pin)					200 µ" Sn	200 µ" Sn	
Contact (Clip)					10 µ" Au	30 µ" Au	

INTERCONNECTS

SERIES 850, 851, 852, 853 • .050" GRID SOLDER CUP HEADERS AND SOCKETS • SINGLE AND DOUBLE ROW STRIPS

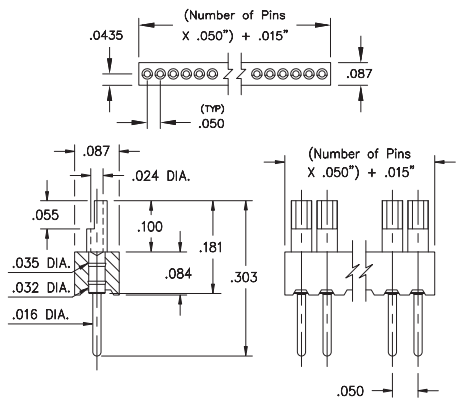

FIG. 1

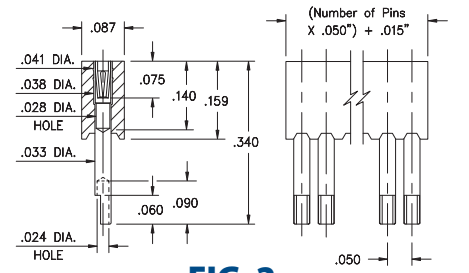

FIG. 2

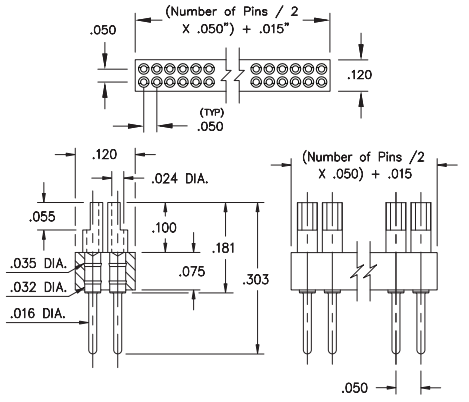

FIG. 3

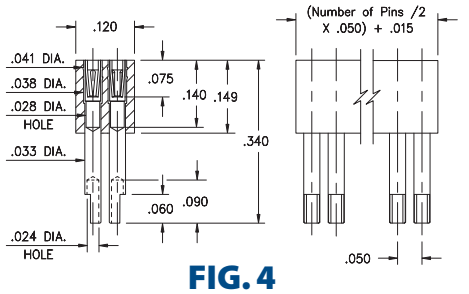

FIG. 4

- Solder cups are pre-aligned and accept up to 26 AWG wire
- Series 850 and 852 headers use MM #3050-0 pins. See page 244 for details
- Series 851 and 853 sockets use MM #1157-0 receptacles that accept pin diameters from .015"-.020". See page 160 for details
- Receptacles use Hi-Rel, 3-finger BeCu #11 contact rated at 3 amps. See page 251 for details
- Insulators are high temperature thermoplastic, suitable for all soldering operations

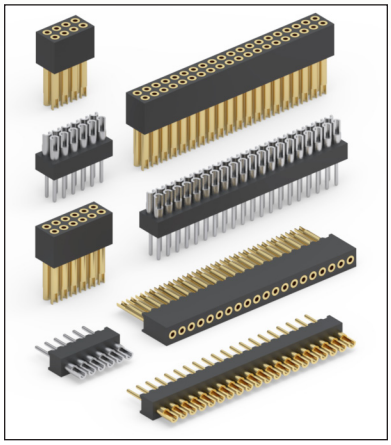

ORDERING INFORMATION

FIG. 1	**Series 850...003**	**Single Row Solder Cup / Solder Tail**
	850-XX-0_ _-10-003000	
	Specify number of pins	01-50
FIG. 2	**Series 851...003**	**Single Row Solder Cup Sockets**
	851-XX-_ _ _-10-003000	
	Specify number of pins	01-50

RoHS-2 2011/65/EU

XX=Plating Code See Below

For Electrical, Mechanical & Enviromental Data, See page 264

SPECIFY PLATING CODE XX=	10 ◆			
Pin Plating	10 µ" Au			

FIG. 3	**Series 852...003**	**Double Row Solder Cup / Solder Tail**
	852-XX-0_ _-10-003000	
	Specify number of pins	002-100
FIG. 4	**Series 853...003**	**Double Row Solder Cup Sockets**
	853-XX-_ _ _-10-003000	
	Specify number of pins	002-100

RoHS-2 2011/65/EU

XX=Plating Code See Below

For Electrical, Mechanical & Enviromental Data, See page 264

SPECIFY PLATING CODE XX=	13 ◆						
Sleeve (Pin)	10 µ" Au						
Contact (Clip)	30 µ" Au						

MILL-MAX Mill-Max Mfg. Corp. • 190 Pine Hollow Road, P.O. Box 300, Oyster Bay, NY 11771 • 516-922-6000 • Fax: 516-922-9253 • www.mill-max.com

SERIES 850, 851, 852, 853 • 050" GRID RIGHT ANGLE HEADERS AND SOCKETS • SINGLE AND DOUBLE ROW STRIPS

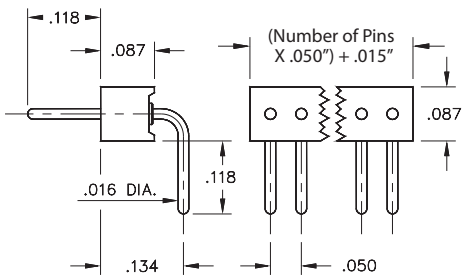

FIG. 1

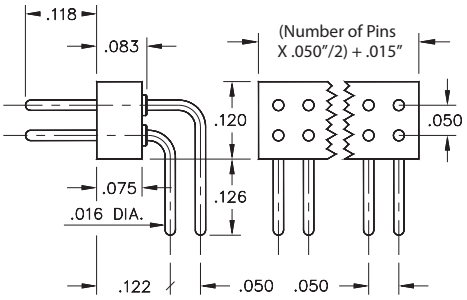

FIG. 2

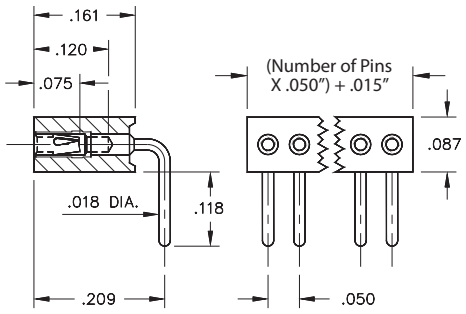

FIG. 3

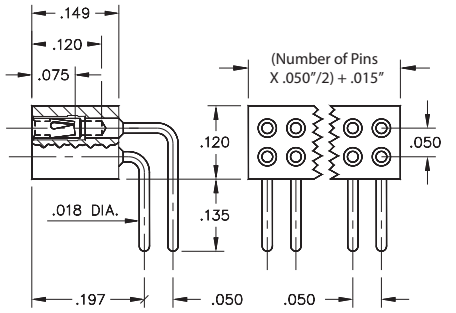

FIG. 4

- Series 850 and 851 interconnects are available in single and double row form
- Series 850 & 852 headers use MM #4006-1 and #4006-2 pins. See page 208 for details
- Series 851 & 853 sockets use MM #4890-1 and #4890-2 receptacles that accept pin diameters from .015"-.021". See page 160 for details
- Receptacles use Hi-Rel, 3-finger BeCu #11 contact rated at 3 amps. See page 251 for details
- Insulators are high temperature thermoplastic, suitable for all soldering operations

ORDERING INFORMATION

FIG. 1	**Series 850...001**	**Single Row Right Angle Pin Header**
	850-XX-0_ _-20-001000	
	Specify number of pins	01-50
FIG. 2	**Series 852...001**	**Double Row Right Angle Pin Header**
	852-XX-_ _ _-20-001000	
	Specify number of pins	002-100

RoHS-2 2011/65/EU

XX=Plating Code See Below

For Electrical, Mechanical & Enviromental Data, See page 264

SPECIFY PLATING CODE XX=	10 ◆	90	40 ◆	
Pin Plating	10 µ" Au	200 µ" Sn/Pb	200 µ" Sn	

FIG. 3	**Series 851...001**	**Single Row Right Angle Socket**
	851-XX-0_ _-20-001000	
	Specify number of pins	01-50
FIG. 4	**Series 853...001**	**Double Row Right Angle Socket**
	853-XX-_ _ _-20-001000	
	Specify number of pins	002-100

RoHS-2 2011/65/EU

XX=Plating Code See Below

For Electrical, Mechanical & Enviromental Data, See page 264

SPECIFY PLATING CODE XX=			93	99		43 ◆	47 ◆
Sleeve (Pin)			200 µ" Sn/Pb	200 µ" Sn/Pb		200 µ" Sn	200 µ" Sn
Contact (Clip)			30 µ" Au	100 µ" Sn/Pb		30 µ" Au	Au Flash

MILL-MAX Mill-Max Mfg. Corp. • 190 Pine Hollow Road, P.O. Box 300, Oyster Bay, NY 11771 • 516-922-6000 • Fax: 516-922-9253 • www.mill-max.com

INTERCONNECTS

SERIES 850, 851, 852, 853 • 050" GRID SURFACE MOUNT HEADERS AND SOCKETS • SINGLE AND DOUBLE ROW STRIPS

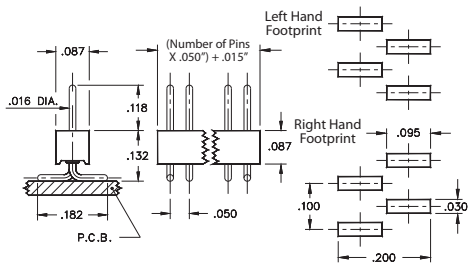

Coplanarity .005". For pin counts >20 positions, consult Technical Support.

FIG. 1

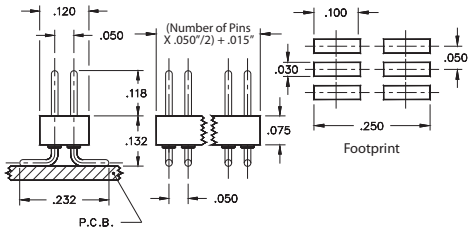

Coplanarity .005". For pin counts >40 positions, consult Technical Support.

FIG. 2

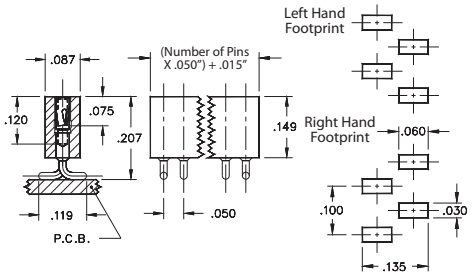

Coplanarity .005". For pin counts >20 positions, consult Technical Support.

FIG. 3

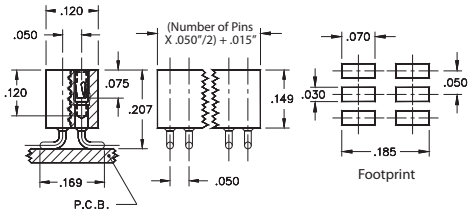

Coplanarity .005". For pin counts >40 positions, consult Technical Support.

FIG. 4

- Single row interconnects having an even number of pins are now available with a left or right hand footprints
- Headers (850 and 852) use MM #4006 pins. See page 208 for details
- Sockets (851 and 853) use MM #4890-0 receptacles and accept pin diameters from .015"-.021". See page 160 for details
- Receptacles use Hi-Rel, 3-finger BeCu #11 contact rated at 3 amps. See page 251 for details
- Insulators are high temperature thermoplastic, suitable for all soldering operations

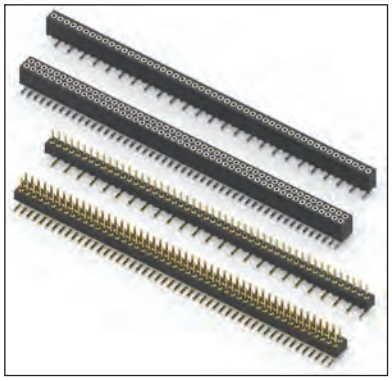

ORDERING INFORMATION

FIG. 1L	**Single Row Header, Left Hand Footprint, Odd or Even # of Pins**			
	850-XX-0_ _-30-001000 **Specify number of pins** ↑ 02-50			
FIG. 1R	**Single Row Header, Right Hand Footprint, Even # of Pins**			
	850-XX-0_ _-30-002000 **Specify number of pins** ↑ 02-50			
FIG. 2	**Double Row Header, Even # of Pins**			
	852-XX-_ _ _-30-001000 **Specify number of pins** ↑ 004-100			
SPECIFY PLATING CODE XX=	10 ◆	90	40 ◆	
Pin Plating	10 µ" Au	200 µ" Sn/Pb	200 µ" Sn	
FIG. 3L	**Single Row Socket, Left Hand Footprint, Odd or Even # of Pins**			
	851-XX-0_ _-30-001000 ★ **Specify number of pins** ↑ 02-50			
FIG. 3R	**Single Row Socket, Right Hand Footprint, Even # of Pins**			
	851-XX-0_ _-30-002000 **Specify number of pins** ↑ 02-50			
FIG. 4	**Double Row Socket, Even # of Pins**			
	853-XX-_ _ _-30-001000 ★ **Specify number of pins** ↑ 004-100			

RoHS-2 2011/65/EU

XX=Plating Code See Below

For Electrical, Mechanical & Enviromental Data, See page 264

SPECIFY PLATING CODE XX=		91	93	99	41 ◆	43 ◆	44 ◆
Sleeve (Pin)		200 µ" Sn/Pb	200 µ" Sn/Pb	200 µ" Sn/Pb	200 µ" Sn	200 µ" Sn	200 µ" Sn
Contact (Clip)		10 µ" Au	30 µ" Au	100 µ" Sn/Pb	10 µ" Au	30 µ" Au	100 µ" Sn

★ 44 Plating Non-Standard

HORIZONTAL SMT PINS & CONNECTORS

VERSATILE CONNECTORS FOR HORIZONTAL & EDGE BOARD MATING APPLICATIONS

Z-Bend Style
SIP Header & Socket
HSMT (.050" Grid)

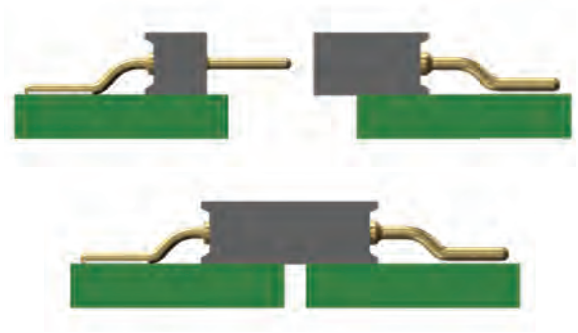

850-10-0XX-40-001000
.050" Grid (See Page 40)

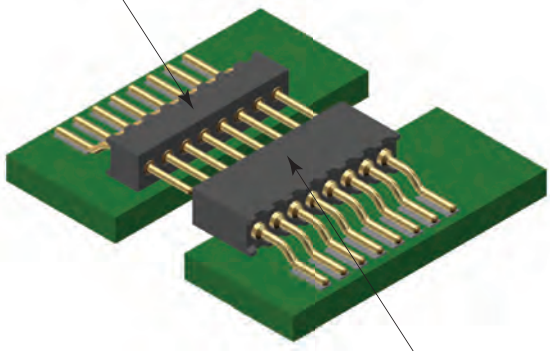

851-13-0XX-40-001000
.050" Grid (See Page 40)

Z-Bend Style
SIP Socket HSMT
(.100" Grid)

Block Style
SIP Header HSMT
(.100" Grid)

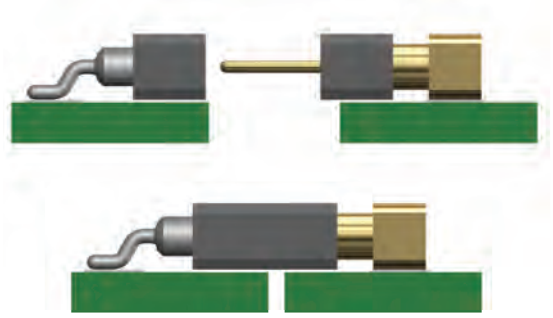

351-10-1XX-40-002000
.100" Grid (See Page 50)

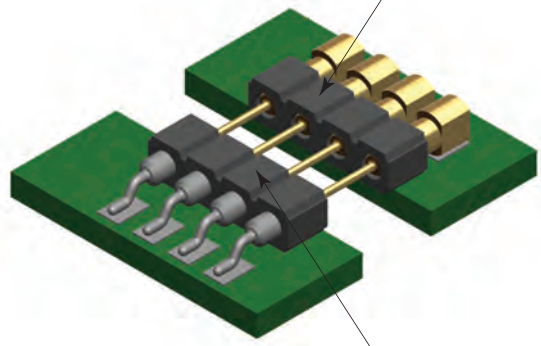

310-43-1XX-40-023000
.100" Grid (See Page 50)

Mill-Max Mfg. offers a complete line of Horizontal Surface Mount products including headers and sockets on .050" (1,27mm) and .100" (2,54mm) grid, discrete spring-loaded and mating target pins and spring-loaded connector strips.

For low profile IO applications surface mount SIP sockets and headers strips are assembled parallel to the board surface. They are ideal for placement near the board edge for easy access test connections & creating pluggable adapter modules which can sit perpendicular to the motherboard (mated to a vertical connector), effectively conserving precious board real estate.

MILL-MAX Mill-Max Mfg. Corp. • 190 Pine Hollow Road, P.O. Box 300, Oyster Bay, NY 11771 • 516-922-6000 • Fax: 516-922-9253 • www.mill-max.com

HORIZONTAL SMT PINS & CONNECTORS

VERSATILE CONNECTORS FOR HORIZONTAL & EDGE BOARD MATING APPLICATIONS

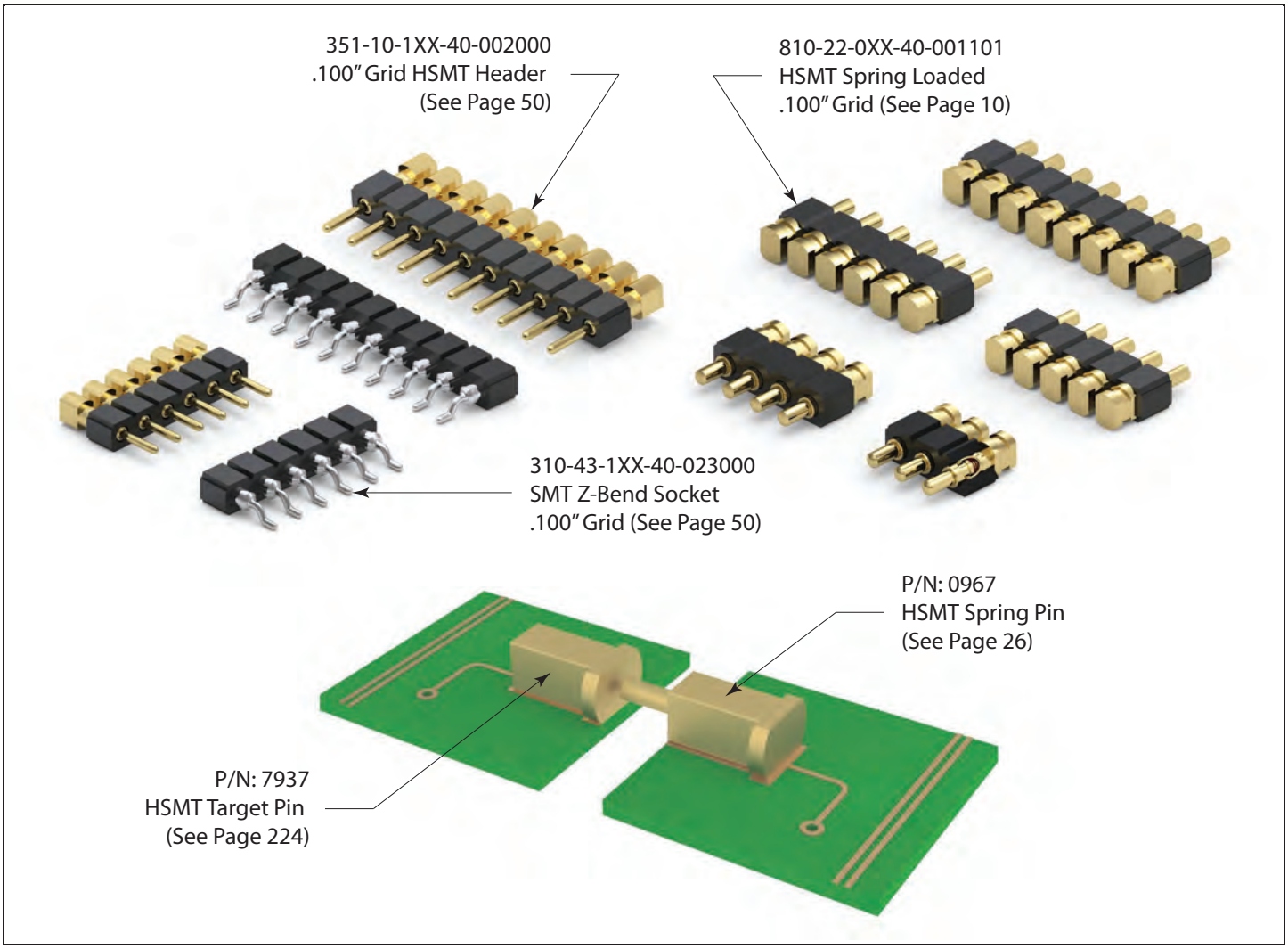

Mill-Max Mfg's #0967 (featured above) is a low profile, horizontal, surface mount spring pin designed for edge board interface applications: board-to-board or device-to-board. The #0967 mounts parallel to the P.C. board so that the plunger travel is horizontal to the board surface. The above board height of .100" (2,54mm) provides a low profile for tight packaging requirements. Typically mounted on the edge of the P.C. board, it can be mated with a board running perpendicular to it, or parallel P.C. boards can be daisy-chained together by using the Mill-Max Mfg. #7937 horizontal SMT target pin and #0967 on opposing boards.

MILL-MAX Mill-Max Mfg. Corp. • 190 Pine Hollow Road, P.O. Box 300, Oyster Bay, NY 11771 • 516-922-6000 • Fax: 516-922-9253 • www.mill-max.com

SERIES 850 & 851 • .050" GRID HORIZONTAL SURFACE MOUNT Z-BEND HEADERS & SOCKETS • SINGLE ROW STRIPS

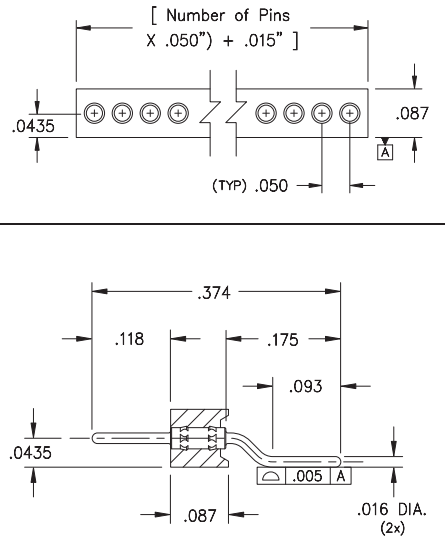

Coplanarity .005". For pin counts >20 positions, consult Technical Support.

FIG. 1

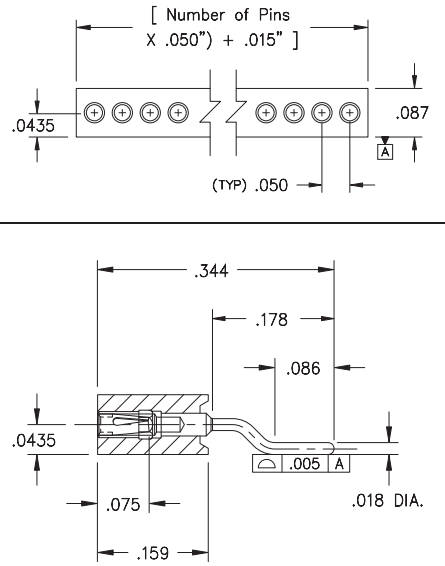

Coplanarity .005". For pin counts >20 positions, consult Technical Support.

FIG. 2

- Series 850 horizontal surface mount headers have .016" dia. pluggable pins and Z-bend tails for SMT soldering to the P.C.B. (MM #4006-1). See page 208 for details
- Series 851 horizontal Surface Mount Z-Bend sockets uses MM #4890-1 receptacles that accept pin diameters from .015"-.020". See page 160 for details
- Receptacles use Hi-Rel, 3-finger BeCu #11 contact rated at 3 amps. See page 251 for details
- Insulators are high temperature thermoplastic, suitable for all soldering operations

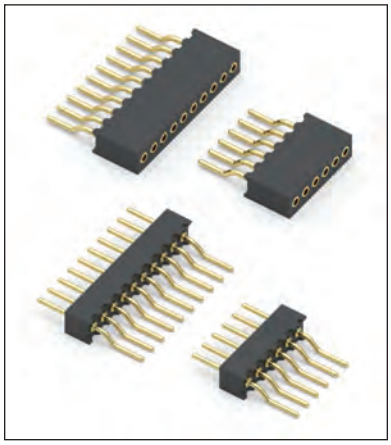

ORDERING INFORMATION

FIG. 1 — **Series 850...001 Single Row Surface Mount Z-Bend Header**

850-10-0_ _-40-001000

Specify number of pins 02-20

RoHS-2 2011/65/EU

XX=Plating Code See Below

For Electrical, Mechanical & Enviromental Data, See page 264

SPECIFY PLATING CODE XX=	10 ◆			
Pin Plating	10 µ" Au			

FIG. 2 — **Series 851...001 Single Row Surface Mount Z-Bend Socket**

851-XX-0_ _-40-001000

Specify number of pins 02-20

RoHS-2 2011/65/EU

XX=Plating Code See Below

For Electrical, Mechanical & Enviromental Data, See page 264

SPECIFY PLATING CODE XX=	11 ◆	13 ◆					
Sleeve (Pin)	10 µ" Au	10 µ" Au					
Contact (Clip)	10 µ" Au	30 µ" Au					

MILL-MAX Mill-Max Mfg. Corp. • 190 Pine Hollow Road, P.O. Box 300, Oyster Bay, NY 11771 • 516-922-6000 • Fax: 516-922-9253 • www.mill-max.com

INTERCONNECTS

SERIES 340 & 399 • .050" AND .100" GRID SURFACE MOUNT HEADERS & SOCKETS • SINGLE ROW STRIPS

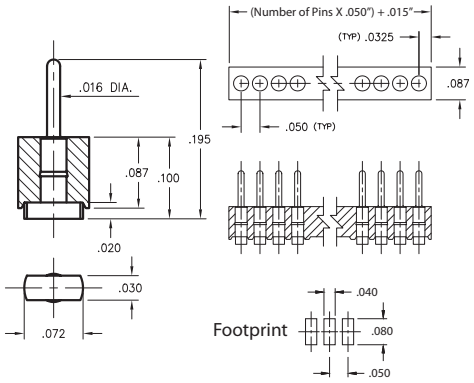

Coplanarity .005". For pin counts >20 positions, consult Technical Support.

FIG. 1

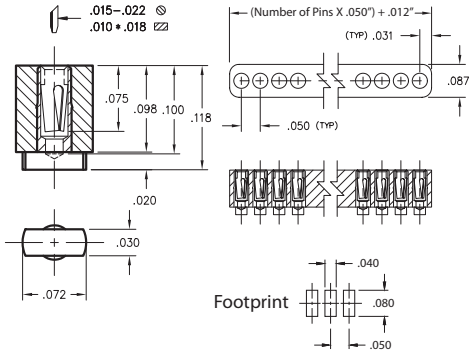

Coplanarity .005". For pin counts >20 positions, consult Technical Support.

FIG. 2

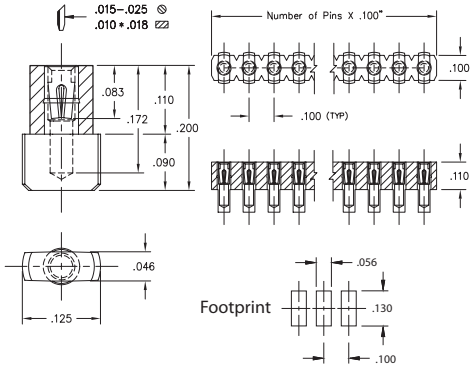

Coplanarity .005". For pin counts >10 positions, consult Technical Support.

FIG. 3

- Series 340 and 399 interconnects are single row headers & sockets having unique surface mount "block" terminals
- "Block" termination makes the interconnects "self standing". This also minimizes profile and reduces the footprint compared with traditional "gullwing" designs
- Series 399 is a matched pair of .050" pitch sockets and headers with a mated height of only .218"
- Series 340 is a .100" pitch SIP socket using a Hi-Rel, 4-finger BeCu #30 contact rated at 3 amps. See page 253 for details
- Insulators are high temperature thermoplastic, suitable for all soldering processes

ORDERING INFORMATION

FIG. 1 — **Series 399...310 — Single Row .050" Grid Header**

399-10-0__-00-310000

Specify number of pins → 02-50

RoHS-2 2011/65/EU

XX=Plating Code See Below

For Electrical, Mechanical & Enviromental Data, See page 264

SPECIFY PLATING CODE XX=	10 ◆			
Pin Plating	10 µ" Au			

FIG. 2 — **Series 399...300 — Single Row .050" Grid Socket**

399-XX-0__-21-300000

Specify number of pins → 02-50

RoHS-2 2011/65/EU

XX=Plating Code See Below

For Electrical, Mechanical & Enviromental Data, See page 264

SPECIFY PLATING CODE XX=		91			41 ◆		
Sleeve (Pin)		200 µ" Sn/Pb			200 µ" Sn		
Contact (Clip)		10 µ" Au			10 µ" Au		

FIG. 3 — **Series 340...780 — Single Row .100" Grid Socket**

340-XX-1__-30-780100

Specify number of pins → 02-64

RoHS-2 2011/65/EU

XX=Plating Code See Below

For Electrical, Mechanical & Enviromental Data, See page 264

SPECIFY PLATING CODE XX=				99			44 ◆
Sleeve (Pin)				200 µ" Sn/Pb			200 µ" Sn
Contact (Clip)				100 µ" Sn/Pb			100 µ" Sn

SERIES 870 & 871 • .070" GRID (.018" DIA.) PINS, RIGHT ANGLE HEADERS & SOCKETS • SINGLE ROW STRIPS

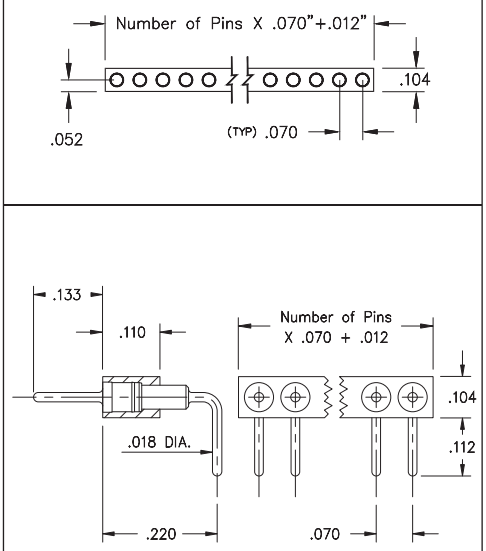

FIG. 1

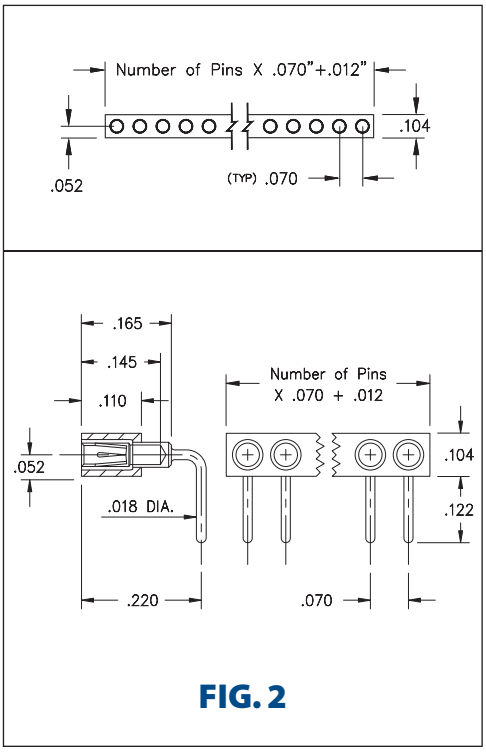

FIG. 2

- Series 870 and 871 Interconnects feature space saving .070" pitch
- Series 870 uses MM #3790-0 pins. See page 209 for details
- Series 871 uses MM #1805 receptacles and accept pin diameters from .015" - .025". See page 169 for details
- Receptacles use Hi-Rel, 4-finger BeCu #30 contact rated at 3 amps. See page 253 for details
- Insulators are high temperature thermoplastic, suitable for all soldering operations

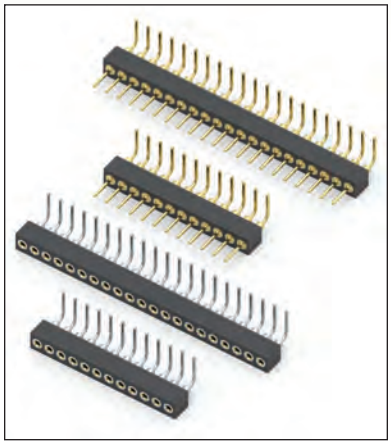

ORDERING INFORMATION

FIG. 1 — **Series 870...20-001** — **Right Angle Pin Header**

870-10-0__-20-001000

Specify number of pins → 02-21

RoHS-2 2011/65/EU

XX=Plating Code See Below

For Electrical, Mechanical & Enviromental Data, See page 264

SPECIFY PLATING CODE XX=	10 ◆			
Pin Plating	10 µ" Au			

FIG. 2 — **Series 871...20-001** — **Right Angle Socket**

871-XX-0__-20-001000

Specify number of pins → 02-21

RoHS-2 2011/65/EU

XX=Plating Code See Below

For Electrical, Mechanical & Enviromental Data, See page 264

SPECIFY PLATING CODE XX=					41 ◆	43 ◆	
Sleeve (Pin)					200 µ" Sn	200 µ" Sn	
Contact (Clip)					10 µ" Au	30 µ" Au	

MILL-MAX Mill-Max Mfg. Corp. • 190 Pine Hollow Road, P.O. Box 300, Oyster Bay, NY 11771 • 516-922-6000 • Fax: 516-922-9253 • www.mill-max.com

SERIES 830, 831, 832, 833 • 2mm GRID HEADERS AND SOCKETS • SINGLE AND DOUBLE ROW STRIPS

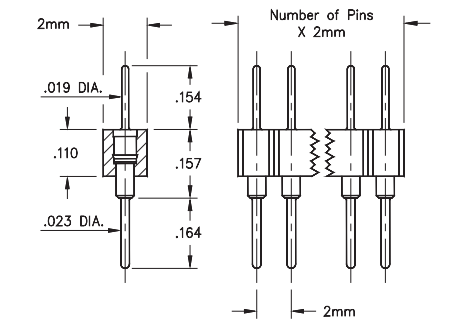

FIG. 1

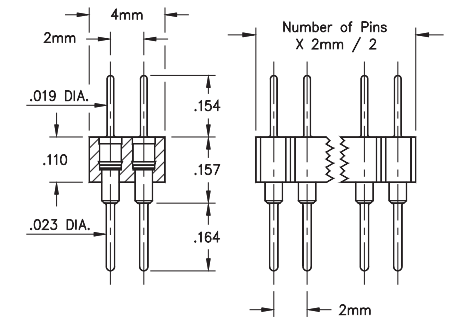

FIG. 2

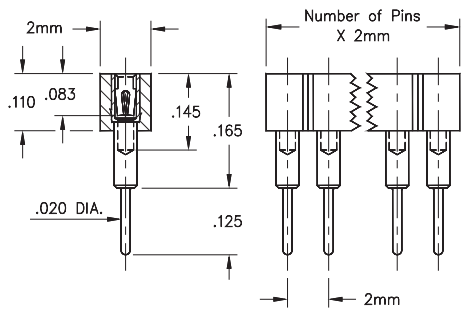

FIG. 3

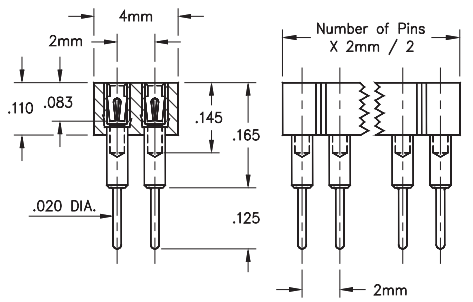

FIG. 4

- Series 830 single & double row interconnects have 2mm pin spacing and permit board stacking as low as .322"
- Pin headers (830 & 832 series) use MM #5012 pins. See page 208 for details
- Sockets (831 & 833 series) use MM #1802 receptacles and accept pin diameters from .015"-.025". See page 169 for details
- Contact is rated at 3 amps
- Insulators are high temperature thermoplastic, suitable for all soldering operations

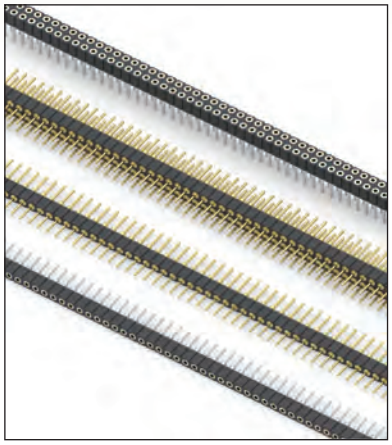

ORDERING INFORMATION

FIG. 1	**Series 830...001**	**Single Row Pin Header**
	830-XX-0_ _-10-001000	
	Specify number of pins ← 01-50	
FIG. 2	**Series 832...001**	**Double Row Pin Header**
	832-XX-_ _ _-10-001000	
	Specify number of pins ← 004-100	

RoHS-2 2011/65/EU

XX=Plating Code See Below

For Electrical, Mechanical & Enviromental Data, See page 264

SPECIFY PLATING CODE XX=	10 ◆	90	40 ◆	
Pin Plating	10 µ" Au	200 µ" Sn/Pb	200 µ" Sn	

FIG. 3	**Series 831...001**	**Single Row Socket**
	831-XX-0_ _-10-001000	
	Specify number of pins ← 01-50	
FIG. 4	**Series 833...001**	**Double Row Socket**
	833-XX-_ _ _-10-001000	
	Specify number of pins ← 004-100	

RoHS-2 2011/65/EU

XX=Plating Code See Below

For Electrical, Mechanical & Enviromental Data, See page 264

SPECIFY PLATING CODE XX=		91	93		41 ◆	43 ◆	47 ◆
Sleeve (Pin)		200 µ" Sn/Pb	200 µ" Sn/Pb		200 µ" Sn	200 µ" Sn	200 µ" Sn
Contact (Clip)		10 µ" Au	30 µ" Au		10 µ" Au	30 µ" Au	Au Flash

MILL-MAX Mill-Max Mfg. Corp. • 190 Pine Hollow Road, P.O. Box 300, Oyster Bay, NY 11771 • 516-922-6000 • Fax: 516-922-9253 • www.mill-max.com

INTERCONNECTS

SERIES 830, 831, 832, 833 • 2mm GRID GULL WING SURFACE MOUNT HEADERS AND SOCKETS • SINGLE AND DOUBLE ROW STRIPS

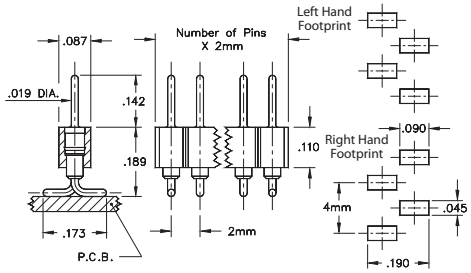

Coplanarity .005". For pin counts >12 positions, consult Technical Support.

FIG. 1

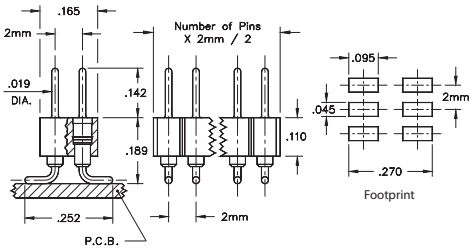

Coplanarity .005". For pin counts >24 positions, consult Technical Support.

FIG. 2

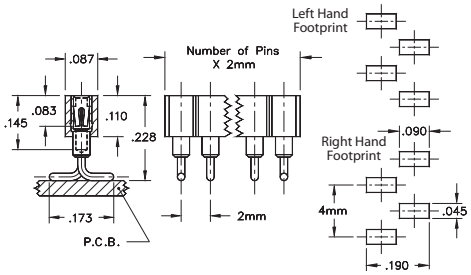

Coplanarity .005". For pin counts >12 positions, consult Technical Support.

FIG. 3

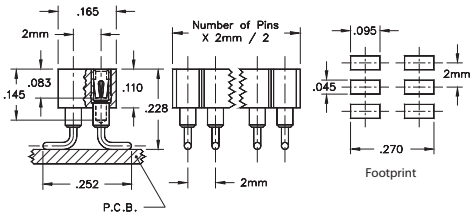

Coplanarity .005". For pin counts >24 positions, consult Technical Support.

FIG. 4

- Headers (830 & 832) use MM #6218 pins. See page 208 for details
- Sockets (831 & 833) use MM #1802 receptacles and accept pin diameters from .015"-.025". See page 169 for details
- Coplanarity .005" (Single Row max 12 pins; Double Row max 24 pins) For higher pin counts, contact Technical Support
- Contact is rated at 3 amps
- Insulators are high temperature thermoplastic, suitable for all soldering operations

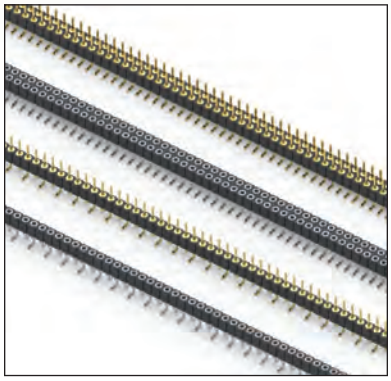

ORDERING INFORMATION

FIG. 1L	**Single Row Header, Left Hand Footprint, Odd or Even # of pins**			
	830-XX-0_ _-30-001000			
	Specify number of pins ↑ 02-50			
FIG. 1R	**Single Row Header, Right Hand Footprint, Even # of pins**			
	830-XX-0_ _-30-002000			
	Specify number of pins ↑ 02-50			
FIG. 2	**Double Row Header, Even # of pins**			
	832-XX-_ _ _-30-001000			
	Specify number of pins ↑ 004-100			
SPECIFY PLATING CODE XX=	10 ◆	90	40 ◆	
Pin Plating	10 µ" Au	200 µ" Sn/Pb	200 µ" Sn	
FIG. 3L	**Single Row Socket, Left Hand Footprint, Odd or Even # of pins**			
	831-XX-0_ _-30-001000			
	Specify number of pins ↑ 02-50			
FIG. 3R	**Single Row Socket, Right Hand Footprint, Even # of pins**			
	831-XX-0_ _-30-002000			
	Specify number of pins ↑ 02-50			
FIG. 4	**Double Row Socket, Even # of pins**			
	833-XX-_ _ _-30-001000			
	Specify number of pins ↑ 004-100			

RoHS-2 2011/65/EU

XX=Plating Code See Below

For Electrical, Mechanical & Enviromental Data, See page 264

SPECIFY PLATING CODE XX=		91	93		41 ◆	43 ◆	
Sleeve (Pin)		200 µ" Sn/Pb	200 µ" Sn/Pb		200 µ" Sn	200 µ" Sn	
Contact (Clip)		10 µ" Au	30 µ" Au		10 µ" Au	30 µ" Au	

MILL-MAX® *Mill-Max Mfg. Corp. • 190 Pine Hollow Road, P.O. Box 300, Oyster Bay, NY 11771 • 516-922-6000 • Fax: 516-922-9253 • www.mill-max.com*

SERIES 830, 831, 832, 833 • 2mm GRID RIGHT ANGLE HEADERS AND SOCKETS • SINGLE AND DOUBLE ROW STRIPS

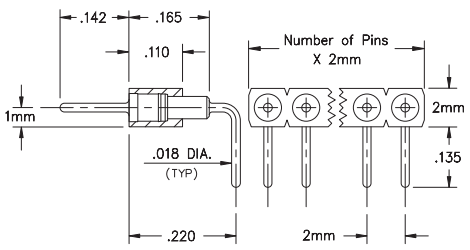

FIG. 1

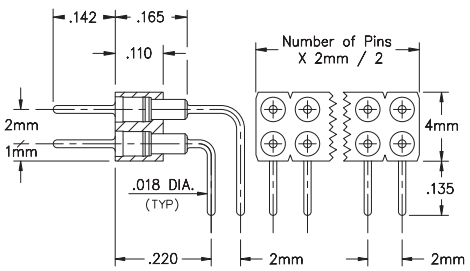

FIG. 2

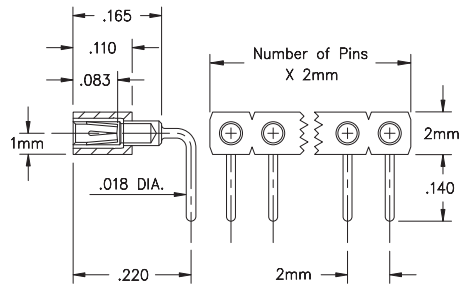

FIG. 3

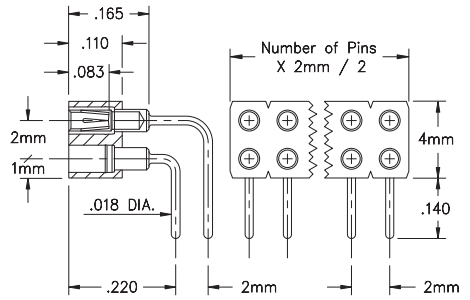

FIG. 4

- Series 830 & 832 use MM #3790 & MM #3796 pins. See page 209 for details
- Series 831 & 833 use MM #1805 and MM #3805 receptacles and accept pin diameters from .015"-.025". See page 169 for details
- Receptacles use Hi-Rel, Low force, 6-finger BeCu #32 contact rated at 3 amps. See page 253 for details
- Insulators are high temperature thermoplastic, suitable for all soldering operations

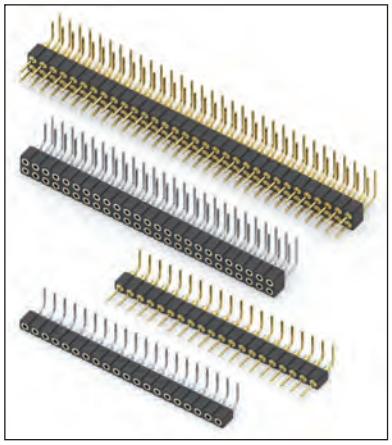

ORDERING INFORMATION

FIG. 1	**Series 830...001**	**Single Row Right Angle Header**
	830-10-0_ _-20-001000	
	Specify number of pins	01-50
FIG. 2	**Series 832...001**	**Double Row Right Angle Header**
	832-10-_ _ _-20-001000	
	Specify number of pins	002-100

RoHS-2 2011/65/EU

XX=Plating Code See Below

For Electrical, Mechanical & Enviromental Data, See page 264

SPECIFY PLATING CODE XX=	10 ◆			
Pin Plating	10 µ" Au			

FIG. 3	**Series 831...001**	**Single Row Right Angle Socket**
	831-XX-0_ _-20-001000	
	Specify number of pins	01-50
FIG. 4	**Series 833...001**	**Double Row Right Angle Socket**
	833-43-_ _ _-20-001000	
	Specify number of pins	002-100

RoHS-2 2011/65/EU

XX=Plating Code See Below

For Electrical, Mechanical & Enviromental Data, See page 264

SPECIFY PLATING CODE XX=					41 ◆	43 ◆	
Sleeve (Pin)					200 µ" Sn	200 µ" Sn	
Contact (Clip)					10 µ" Au	30 µ" Au	

SERIES 832 & 833 • 2mm GRID (.020" DIA. PINS), SHROUDED STRAIGHT, SURFACE MOUNT & RIGHT ANGLE • DOUBLE ROW STRIPS

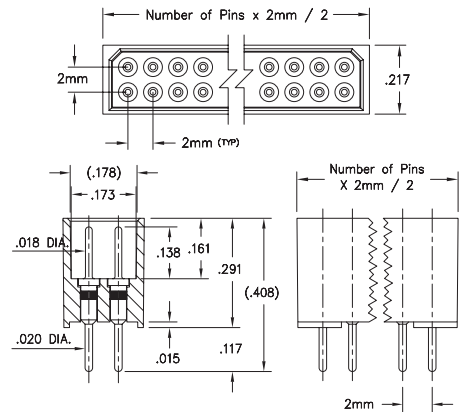

FIG. 1

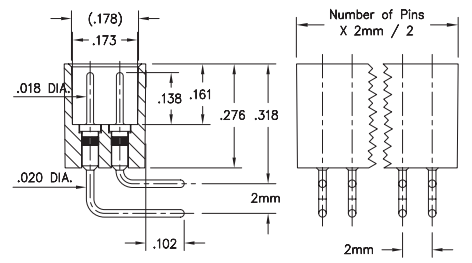

FIG. 2

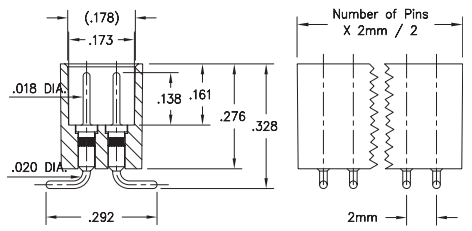

FIG. 3

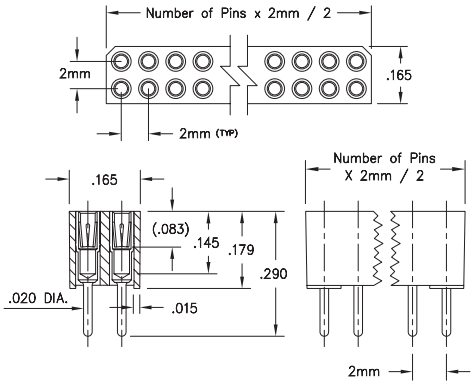

FIG. 4

- Shrouded pin interconnects available with straight Series 832...10-052 or surface mount 832...30-052 and use MM #3143 pins. Series 832...20-052 right angle interconnects use MM #3160 and #3161 pins. See page 214 for details
- Series 833...10-002 with keying features use MM #1802 and accept pin diameters from .015"-.025". See page 169 for details
- Receptacles use Hi-Rel, Low force, 4-finger BeCu #30 contact rated at 3 amps. See page 253 for details
- Insulators are high temperature thermoplastic, suitable for all soldering operations

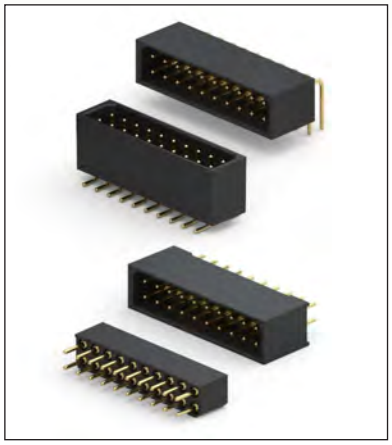

ORDERING INFORMATION

FIG. 1	**Series 832...10-052**	**Straight Pin Header**
	832-10-_ _ _-10-052000	
	Specify number of pins ↑ 004-100	
FIG. 2	**Series 832...20-052**	**Right Angle Pin Header**
	832-10-_ _ _-20-052000	
	Specify number of pins ↑ 004-100	
FIG. 3	**Series 832...30-052**	**Surface Mount Pin Header**
	832-10-_ _ _-30-052000	
	Specify number of pins ↑ 004-100	

RoHS-2 2011/65/EU

XX=Plating Code See Below

For Electrical, Mechanical & Enviromental Data, See page 264

SPECIFY PLATING CODE XX=	10 ◆			
Pin Plating	10 µ" Au			

FIG. 4	**Series 833...10-002**	**Double Row Keying Socket**
	833-13-_ _ _-10-002000	
	Specify number of pins ↑ 004-100	

RoHS-2 2011/65/EU

XX=Plating Code See Below

For Electrical, Mechanical & Enviromental Data, See page 264

SPECIFY PLATING CODE XX=	13 ◆						
Sleeve (Pin)	10 µ" Au						
Contact (Clip)	30 µ" Au						

SERIES 315 & 415 • .100" GRID, SUPER LOW PROFILE SOCKETS • SINGLE AND DOUBLE ROW STRIPS

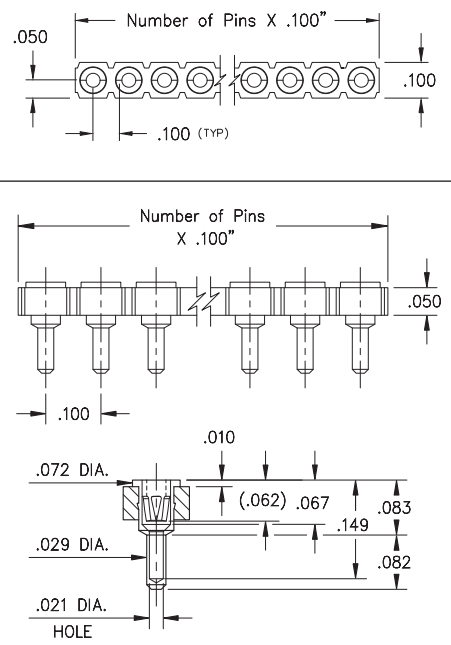

FIG. 1

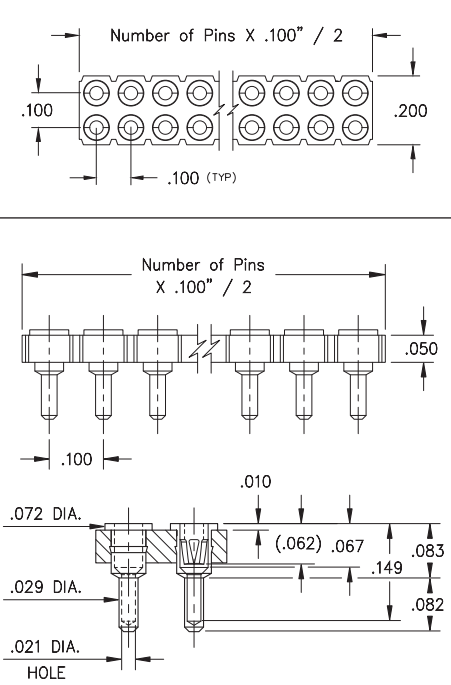

FIG. 2

- Series 315 and 415 solder mount sockets use MM #0512 receptacles that accept pin diameters from .015"-.022". See pages 161 for details
- Hi-Rel, 4-finger BeCu #12 contact is rated at 3 amps. See page 252 for details
- .083" Super low profile above the board utilizes .050" thick insulators
- Insulators are high temperature thermoplastic, suitable for all soldering operations

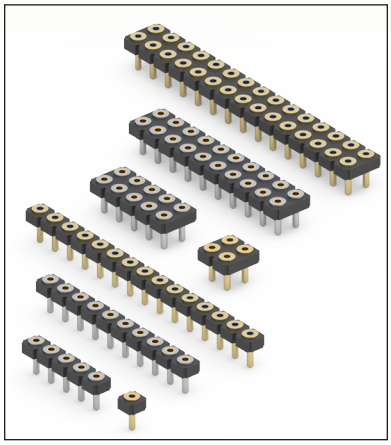

ORDERING INFORMATION

FIG. 1	**Series 315...004**	**Single Row Socket**
	315-XX-1__-41-004000 **Specify number of pins** ↑ 01-32	
FIG. 2	**Series 415...004**	**Double Row Socket**
	415-XX-2__-41-004000 **Specify number of pins** ↑ 04-72	

RoHS-2 2011/65/EU

XX=Plating Code See Below

For Electrical, Mechanical & Enviromental Data, See page 264

SPECIFY PLATING CODE XX=	13 ◆		93		43 ◆	44 ◆	47 ◆
Sleeve (Pin)	10 µ" Au		200 µ" Sn/Pb		200 µ" Sn	200 µ" Sn	200 µ" Sn
Contact (Clip)	30 µ" Au		30 µ" Au		30 µ" Au	100 µ" Sn	Au Flash

MILL-MAX® Mill-Max Mfg. Corp. • 190 Pine Hollow Road, P.O. Box 300, Oyster Bay, NY 11771 • 516-922-6000 • Fax: 516-922-9253 • www.mill-max.com

SERIES 301, 310, 350, 399 • .100" GRID (.018" DIA.) PINS, STRAIGHT AND RIGHT ANGLE • SINGLE ROW STRIPS

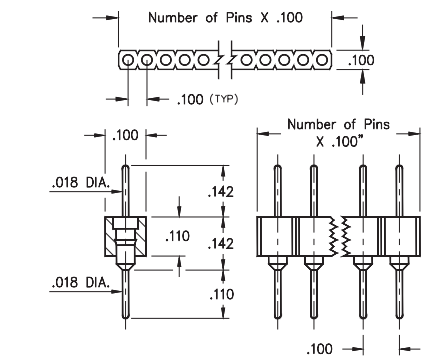

FIG. 1

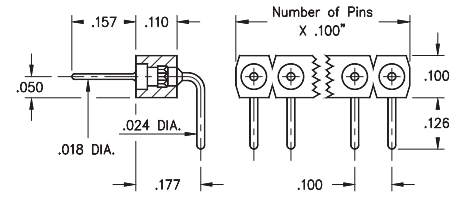

FIG. 2

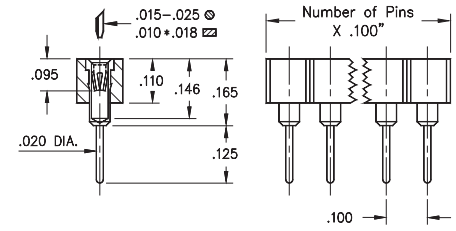

FIG. 3

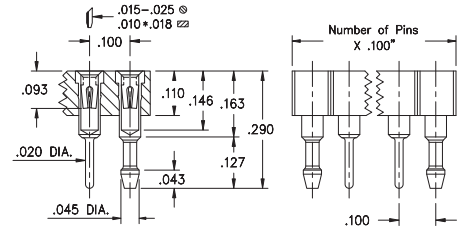

FIG. 4

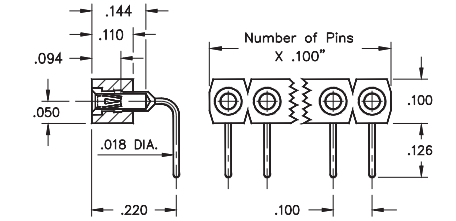

FIG. 5

- Series 3XX are available with straight and right angle solder tails
- Series 350 & 399...009 use MM #3404 and #5011 pins. See pages 212 & 214 for details
- Series 301, 310 & 399...003 use MM #0156, #1001 & #1103 receptacles. See pages 165 and 166 for details
- Receptacles use Hi-Rel, 4-finger #30 BeCu contact rated at 3 amps. See page 253 for details
- Insulators are high temperature thermoplastic, suitable for all soldering operations

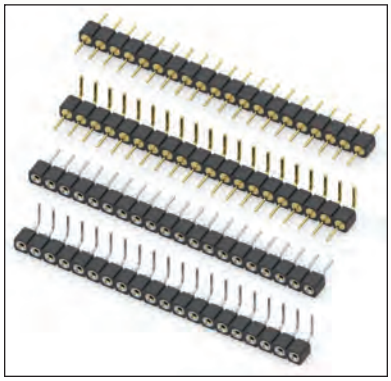

ORDERING INFORMATION

FIG. 1	**Series 350...006**	**Straight Pin Header**
	350-XX-1__-00-006000	
	Specify number of pins ↑ 01-64	
FIG. 2	**Series 399...009**	**Right Angle Pin Header**
	399-XX-1__-10-009000	
	Specify number of pins ↑ 02-64	

RoHS-2 2011/65/EU

XX=Plating Code See Below

For Electrical, Mechanical & Enviromental Data, See page 264

SPECIFY PLATING CODE XX=	10 ◆	90	40 ◆	
Pin Plating	10 µ" Au	200 µ" Sn/Pb	200 µ" Sn	

FIG. 3	**Series 310...001**	**Solder Tail Socket**
	310-XX-1__-41-001000	
	Specify number of pins ↑ 01-64	
FIG. 4	**Series 301...056**	**Socket with Retention Pins**
	301-43-1__-41-560000	
	Specify number of pins ↑ 03-64	
FIG. 5	**Series 399...003**	**Right Angle Socket**
	399-XX-1__-10-003000	
	Specify number of pins ↑ 02-64	

RoHS-2 2011/65/EU

XX=Plating Code See Below

For Electrical, Mechanical & Enviromental Data, See page 264

SPECIFY PLATING CODE XX=	11 ◆	13 ◆	91	93	99	41 ◆	43 ◆	44 ◆	47 ◆
Sleeve (Pin)	10 µ" Au	10 µ" Au	200 µ"Sn/Pb	200 µ"Sn/Pb	200 µ"Sn/Pb	200 µ" Sn	200 µ" Sn	200 µ" Sn	200 µ" Sn
Contact (Clip)	10 µ" Au	30 µ" Au	10 µ" Au	30 µ" Au	100 µ"Sn/Pb	10 µ" Au	30 µ" Au	100 µ" Sn	Au Flash

★ 41, 91 & 99 Platings Non-Standard

MILL-MAX Mill-Max Mfg. Corp. • 190 Pine Hollow Road, P.O. Box 300, Oyster Bay, NY 11771 • 516-922-6000 • Fax: 516-922-9253 • www.mill-max.com

SERIES 410, 450, 499 • .100" GRID (.018" DIA.) PINS, STRAIGHT AND RIGHT ANGLE • DOUBLE ROW STRIPS

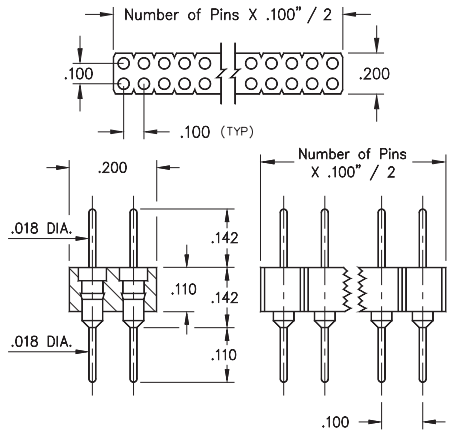

FIG. 1

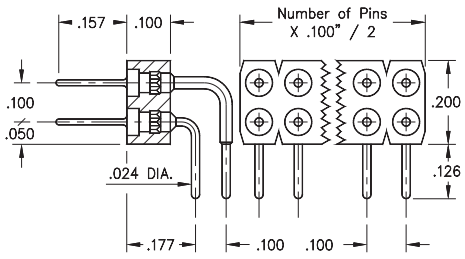

FIG. 2

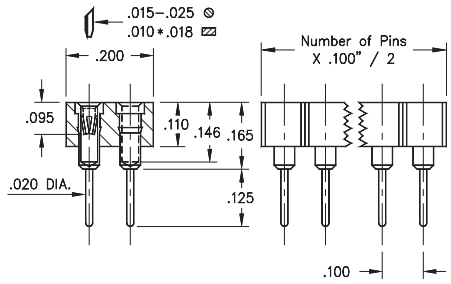

FIG. 3

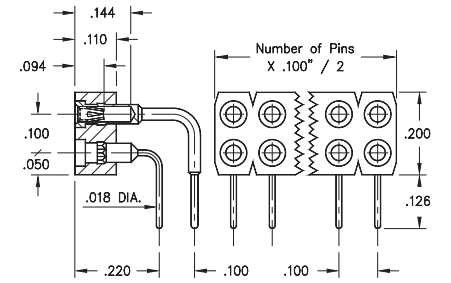

FIG. 4

- Series 4XX are available with straight and right angle solder tails
- Series 450 & 499...009 use MM #3404 and #5011/5113 pins. See pages 212 and 214 for details
- Series 410 & 499...003 use MM #1001 and #1103/1602 receptacles. See pages 165, 166 and 167 for details
- Receptacles use Hi-Rel, 4-finger #30 BeCu contact rated at 3 amps. See page 253 for details
- Insulators are high temperature thermoplastic, suitable for all soldering operations

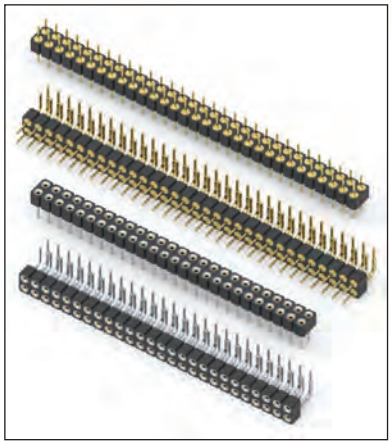

ORDERING INFORMATION

FIG. 1	**Series 450...006**	**Straight Pin Header**
	450-XX-2__-00-006000	
	Specify number of pins	04-64
FIG. 2	**Series 499...009**	**Right Angle Pin Header**
	499-10-2__-10-009000	
	Specify number of pins	02-64

RoHS-2 2011/65/EU

XX=Plating Code See Below

For Electrical, Mechanical & Enviromental Data, See page 264

SPECIFY PLATING CODE XX=	10 ◆	90	40 ◆	
Pin Plating	10 µ" Au	200 µ" Sn/Pb	200 µ" Sn	

FIG. 3	**Series 410...001**	**Solder Tail Socket**
	410-XX-2__-41-001000	
	Specify number of pins	04-64
FIG. 4	**Series 499...003**	**Right Angle Socket**
	499-XX-2__-10-003000	
	Specify number of pins	02-64

RoHS-2 2011/65/EU

XX=Plating Code See Below

For Electrical, Mechanical & Enviromental Data, See page 264

SPECIFY PLATING CODE XX=	11 ◆	13 ◆	91	93	41 ◆	43 ◆	
Sleeve (Pin)	10 µ" Au	10 µ" Au	200 µ" Sn/Pb	200 µ" Sn/Pb	200 µ" Sn	200 µ" Sn	
Contact (Clip)	10 µ" Au	30 µ" Au	10 µ" Au	30 µ" Au	10 µ" Au	30 µ" Au	

SERIES 380 & 480 • .100" GRID LOW PROFILE SOLDER CUP HEADERS SINGLE AND DOUBLE ROW STRIPS

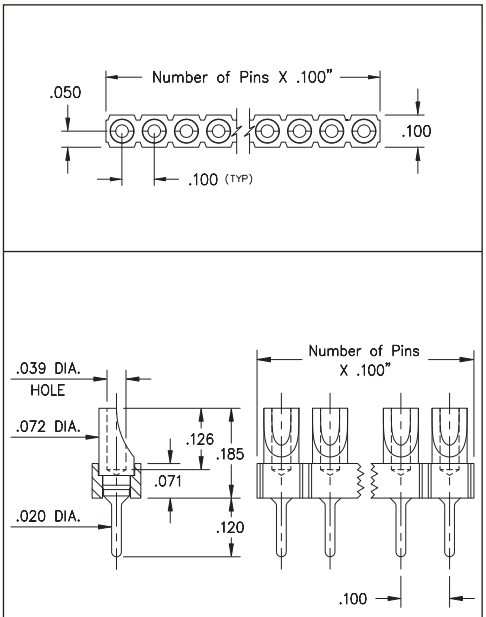

FIG. 1

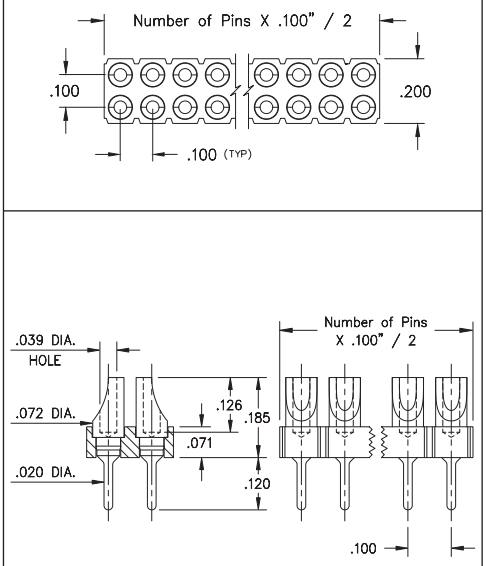

FIG. 2

- Series 380 & 480 solder cup headers for low profile wire termination applications
- .020" diameter pins are suitable for mating with standard sockets or for through-hole soldering to the P.C.B.
- Solder cups are uniformly aligned to facilitate efficient soldering
- Accepts up to 22 AWG Stranded wire
- Insulators are high temperature thermoplastic, suitable for all soldering operations

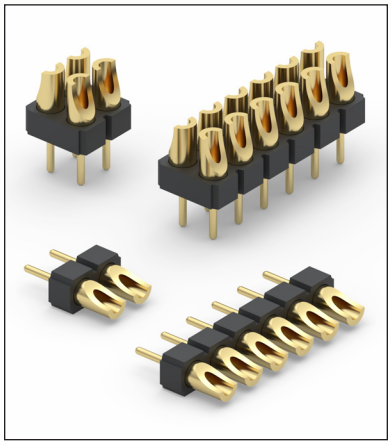

ORDERING INFORMATION

FIG. 1 — **Series 380...002** — **Single Row Solder Cup Header**

380-10-0_ _-00-002000

Specify number of pins — 01-64

RoHS-2 2011/65/EU

XX=Plating Code See Below

For Electrical, Mechanical & Enviromental Data, See page 264

SPECIFY PLATING CODE XX=	10 ◆			
Pin Plating	10 µ" Au			

FIG. 2 — **Series 480...002** — **Double Row Solder Cup Header**

480-XX-0_ _-00-002000

Specify number of pins — 02-72

RoHS-2 2011/65/EU

XX=Plating Code See Below

For Electrical, Mechanical & Enviromental Data, See page 264

SPECIFY PLATING CODE XX=	10 ◆			
Pin Plating	10 µ" Au			

MILL-MAX Mill-Max Mfg. Corp. • 190 Pine Hollow Road, P.O. Box 300, Oyster Bay, NY 11771 • 516-922-6000 • Fax: 516-922-9253 • www.mill-max.com

SERIES 380 • .100" GRID, LOW PROFILE ANTI-ROTATION STRAIGHT & RIGHT ANGLE SOLDER CUP HEADERS • SINGLE ROW STRIPS

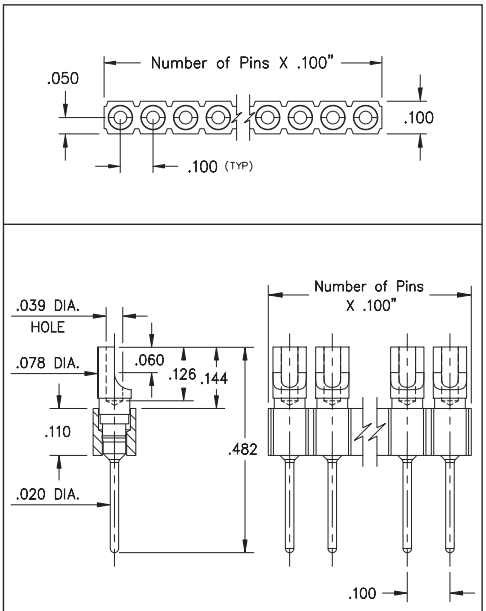

FIG. 1

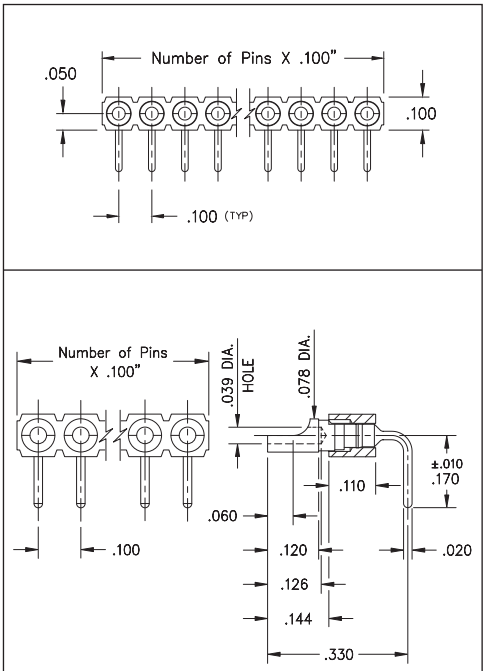

FIG. 2

- Series 380 straight and right angle solder cup headers for low profile wire termination applications
- .020" diameter pins are suitable for mating with standard sockets or for through-hole soldering to the P.C.B.
- Solder cups are uniformly aligned to facilitate efficient soldering with anti-rotation boss
- Accepts up to 22 AWG Stranded wire
- Insulators are high temperature thermoplastic, suitable for all soldering operations

ORDERING INFORMATION

FIG. 1 — **Series 380...003** — **Single Row Solder Cup Header**

380-XX-1__-00-003000

Specify number of pins → 01-64

RoHS-2 2011/65/EU

XX=Plating Code See Below

For Electrical, Mechanical & Enviromental Data, See page 264

SPECIFY PLATING CODE XX=	10 ◆	90	40 ◆	
Pin Plating	10 µ" Au	200 µ" Sn/Pb	200 µ" Sn	

FIG. 2 — **Series 380...003** — **Single Row R/A Solder Cup Header**

380-XX-1__-10-003000

Specify number of pins → 01-64

RoHS-2 2011/65/EU

XX=Plating Code See Below

For Electrical, Mechanical & Enviromental Data, See page 264

SPECIFY PLATING CODE XX=	10 ◆		40 ◆	
Pin Plating	10 µ" Au		200 µ" Sn	

MILL-MAX® Mill-Max Mfg. Corp. • 190 Pine Hollow Road, P.O. Box 300, Oyster Bay, NY 11771 • 516-922-6000 • Fax: 516-922-9253 • www.mill-max.com

INTERCONNECTS

SERIES 329, 380, 429, 480 • .100" GRID SOLDER CUP HEADERS AND SOCKETS • SINGLE AND DOUBLE ROW STRIPS

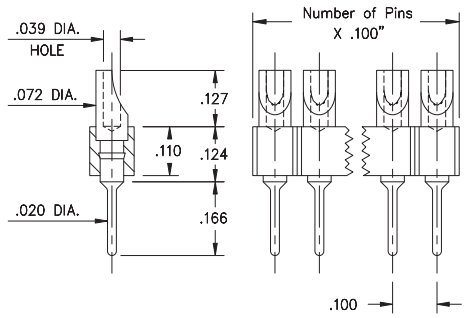

FIG. 1

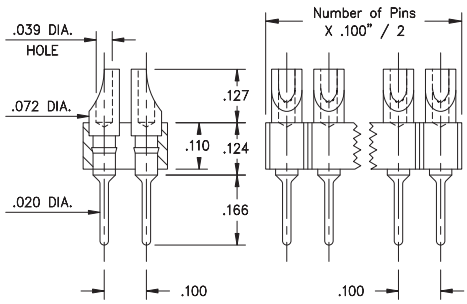

FIG. 2

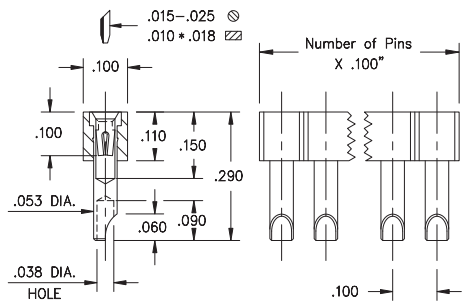

FIG. 3

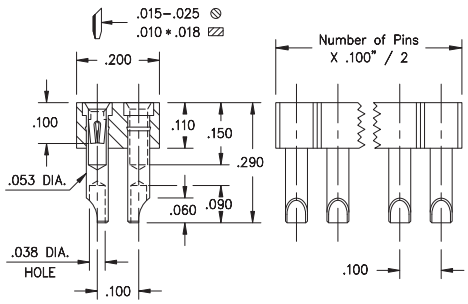

FIG. 4

- Series 380 & 480 use MM #8000 pins. See page 216 for details
- Series 329 & 429 use MM #2954 receptacles and accept pin diameters from .015"-.025". See page 171 for details
- Series 329 & 429 receptacles use Hi-Rel, 4-finger BeCu #30 contact rated at 3 amps. See page 253 for details
- Soldercups are pre-aligned
- Insulators are high temperature thermoplastic, suitable for all soldering operations

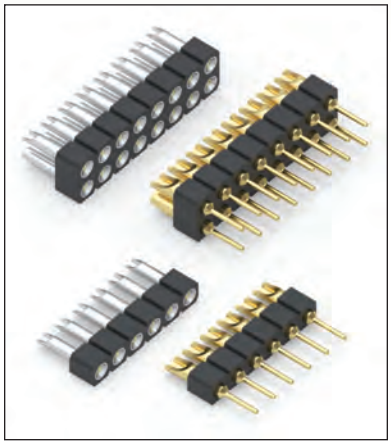

ORDERING INFORMATION

FIG. 1	**Series 380...001**	**Single Row Solder Cup / Solder Tail**
	380-XX-1__-00-001000	
	Specify number of pins	01-64
FIG. 2	**Series 480...001**	**Double Row Solder Cup / Solder Tail**
	480-10-2__-00-001000	
	Specify number of pins	02-64

RoHS-2 2011/65/EU

XX=Plating Code See Below

For Electrical, Mechanical & Enviromental Data, See page 264

SPECIFY PLATING CODE XX=	10 ◆	90	40 ◆	
Pin Plating	10 µ" Au	200 µ" Sn/Pb	200 µ" Sn	

FIG. 3	**Series 329...540**	**Single Row Solder Cup Sockets**
	329-XX-1__-41-540000	
	Specify number of pins	01-64
FIG. 4	**Series 429...540**	**Double Row Solder Cup Sockets**
	429-XX-2__-41-540000	
	Specify number of pins	02-64

RoHS-2 2011/65/EU

XX=Plating Code See Below

For Electrical, Mechanical & Enviromental Data, See page 264

SPECIFY PLATING CODE XX=	11 ◆	13 ◆			41 ◆	43 ◆	
Sleeve (Pin)	10 µ" Au	10 µ" Au			200 µ" Sn	200 µ" Sn	
Contact (Clip)	10 µ" Au	30 µ" Au			10 µ" Au	30 µ" Au	

MILL-MAX Mill-Max Mfg. Corp. • 190 Pine Hollow Road, P.O. Box 300, Oyster Bay, NY 11771 • 516-922-6000 • Fax: 516-922-9253 • www.mill-max.com

SERIES 329, 340, 406, 414, 429 • .100" GRID SURFACE MOUNT HEADERS AND SOCKETS • SINGLE AND DOUBLE ROW STRIPS

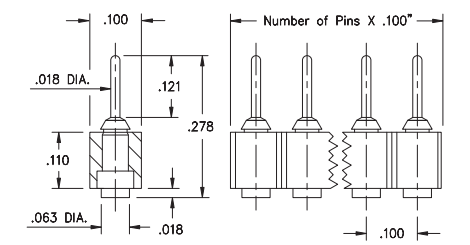

FIG. 1

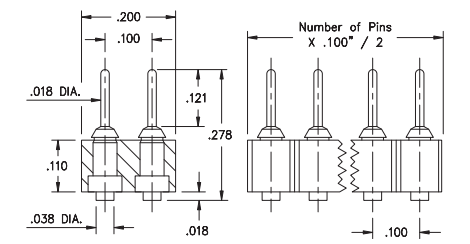

FIG. 2

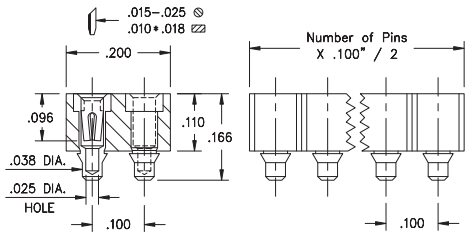

FIG. 3

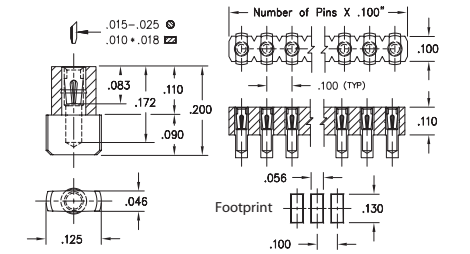

Coplanarity .005". For pin counts >24 positions, consult Technical Support.

FIG. 4

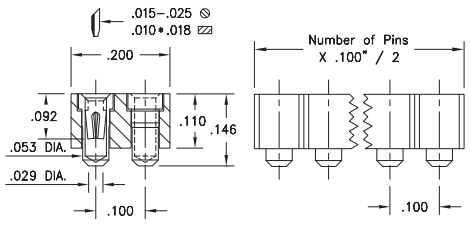

FIG. 5

- Series 329 and 429 pin interconnects feature space saving, pad style SMT termination using MM #2956-X pins. See page 218 for details
- Series 429 and 414 combine for a mated height of .323"
- Series 340, 406 and 414 surface mount sockets use MM #4078, #0668 and #1434 receptacles. See pages 162, 164 and 167 for details
- Series 340, 406 and 414 receptacles use Hi-Rel, 4-finger BeCu #30 contacts rated at 3 amps. Receptacles accept .015"-.025" diameter pins See page 253 for details
- Insulators are high temperature thermoplastic, suitable for all soldering operations

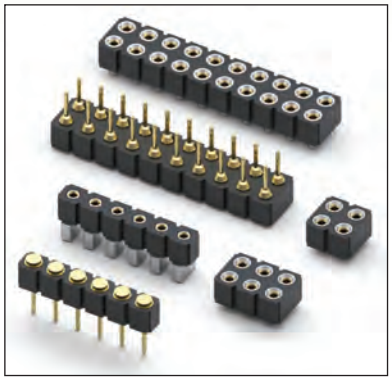

ORDERING INFORMATION

FIG. 1	**Series 329...560**	**Single Row Surface Mount Pin Header**			
	329-10-1__-00-560000				
	Specify number of pins ↑ 02-64				
FIG. 2	**Series 429...560**	**Double Row Surface Mount Pin Header**			
	429-10-2__-00-560000				
	Specify number of pins ↑ 04-72				
SPECIFY PLATING CODE XX=	10 ◆				
Pin Plating	10 µ" Au				
FIG. 3	**Series 414...117**	**Double Row Surface Mount Socket**			
	414-XX-2__-41-117000				
	Specify number of pins ↑ 04-72				
FIG. 4	**Series 340...780**	**Single Row Surface Mount Socket**			
	340-XX-1__-30-780100				
	Specify number of pins ↑ 02-64				
FIG. 5	**Series 406...068**	**Double Row Surface Mount Socket**			
	406-43-2__-30-068000				
	Specify number of pins ↑ 04-20				
	Tape and Reel Packaging				
	Ordering Information: 406-43-2XX-30-068001				
	Available on 44mm wide tape, 355 parts per 13" reel				

RoHS-2 2011/65/EU

XX=Plating Code See Below

For Electrical, Mechanical & Enviromental Data, See page 264

SPECIFY PLATING CODE XX=				99	41 ◆	43 ◆	44 ◆
Sleeve (Pin)				200 µ"Sn/Pb	200 µ"Sn	200 µ"Sn	200 µ"Sn
Contact (Clip)				100 µ"Sn/Pb	10 µ"Au	30 µ"Au	100 µ"Sn

SERIES 339 • .100" GRID HORIZONTAL SURFACE MOUNT JUMPER • SINGLE ROW STRIPS

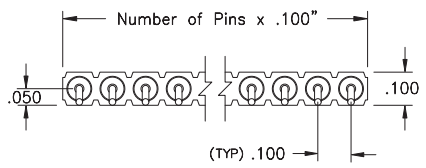

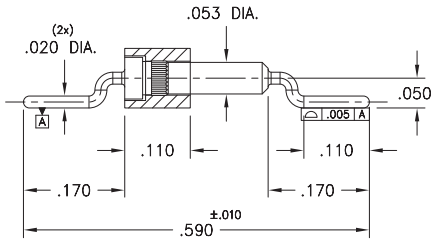

Coplanarity .005". For pin counts >10 positions, consult Technical Support.

FIG. 1

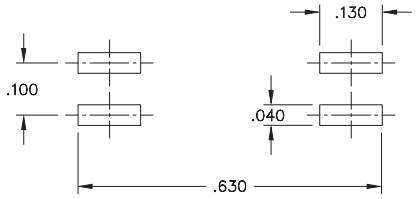

Footprint

- Series 339 single row Horizontal surface mount jumpers on .100" grid centers
- Series 339 use MM #3900 pins. See page 214 for details
- Insulators are high temperature thermoplastic, suitable for all soldering operations
- Ideal for daisy chaining parallel boards

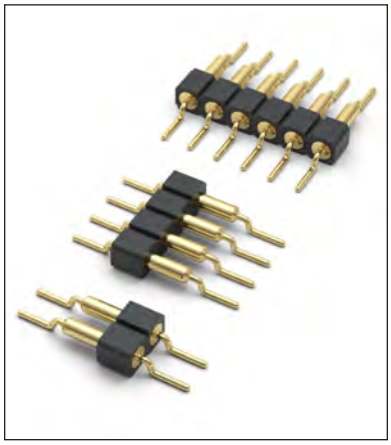

ORDERING INFORMATION

FIG. 1	**Series 339...000**	**Single Row Surface Mount Jumper**
	339-XX-1__-40-000000 **Specify number of pins** 02-10	

RoHS-2 2011/65/EU

XX=Plating Code See Below

For Electrical, Mechanical & Enviromental Data, See page 264

SPECIFY PLATING CODE XX=	10 ◆		40 ◆	
Pin Plating	10 µ" Au		200 µ" Sn	

MILL-MAX® Mill-Max Mfg. Corp. • 190 Pine Hollow Road, P.O. Box 300, Oyster Bay, NY 11771 • 516-922-6000 • Fax: 516-922-9253 • www.mill-max.com

SERIES 310, 350, 410, 450 • .100" GRID (.018" DIA. PINS), SMT GULL WING HEADERS & SOCKETS • SINGLE AND DOUBLE ROW STRIPS

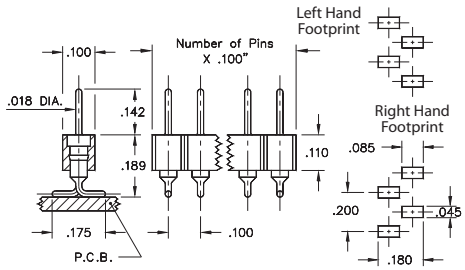

Coplanarity .005". For pin counts >10 positions, consult Technical Support.

FIG. 1

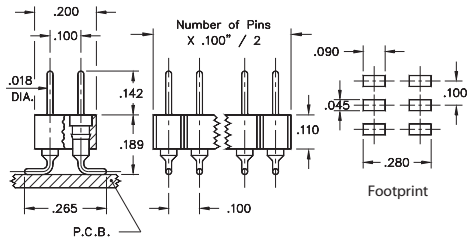

Coplanarity .005". For pin counts >20 positions, consult Technical Support.

FIG. 2

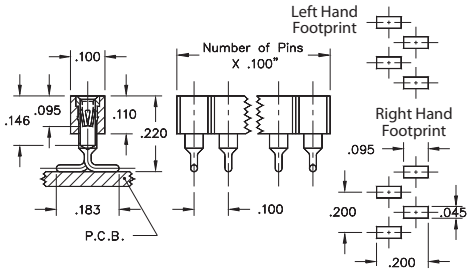

Coplanarity .005". For pin counts >10 positions, consult Technical Support.

FIG. 3

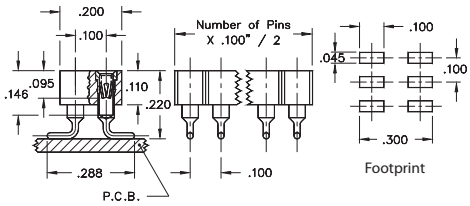

Coplanarity .005". For pin counts >20 positions, consult Technical Support.

FIG. 4

- Headers (350 & 450) use MM #3404 pins. See page 212 for details
- Sockets (310 & 410) use MM #1005 receptacles and accept pin diameters from .015"-.025". See page 166 for details
- Contact is rated at 3 amps
- Coplanarity .005" (single row max. 10 pins; double row max. 20 pins). For higher pin counts, contact Technical Support
- Insulators are high temperature thermoplastic, suitable for all soldering operations

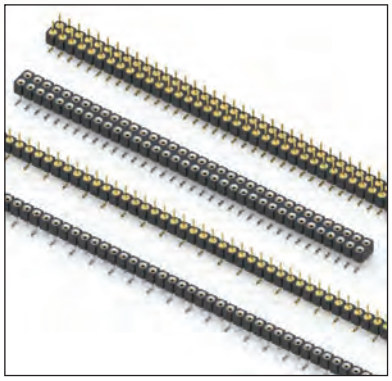

ORDERING INFORMATION

FIG. 1L	**Single Row Header, Left Hand Footprint, Odd or Even # of pins**			
	350-XX-1__-00-106000			
	Specify number of pins 02-64			
FIG. 1R	**Single Row Header, Right Hand Footprint, Even # of pins**			
	350-XX-1__-00-107000			
	Specify number of pins 02-64			
FIG. 2	**Double Row Header, Even # of pins**			
	450-XX-2__-00-106000			
	Specify number of pins 04-72			
SPECIFY PLATING CODE XX=	10 ◆	90	40 ◆	
Pin Plating	10 µ" Au	200 µ" Sn/Pb	200 µ" Sn	
FIG. 3L	**Single Row Socket, Left Hand Footprint, Odd or Even # of pins**			
	310-XX-1__-41-105000			
	Specify number of pins 02-64			
FIG. 3R	**Single Row Socket, Right Hand Footprint, Even # of pins**			
	310-XX-1__-41-107000			
	Specify number of pins 02-64			
FIG. 4	**Double Row Socket, Even # of pins**			
	410-XX-2__-41-105000			
	Specify number of pins 04-72			

RoHS-2 2011/65/EU

XX=Plating Code See Below

For Electrical, Mechanical & Enviromental Data, See page 264

SPECIFY PLATING CODE XX=		91	93		41 ◆	43 ◆	
Sleeve (Pin)		200 µ" Sn/Pb	200 µ" Sn/Pb		200 µ" Sn	200 µ" Sn	
Contact (Clip)		10 µ" Au	30 µ" Au		10 µ" Au	30 µ" Au	

INTERCONNECTS

SERIES 350, 450, 801, 803 • .100" GRID (.025" DIA. PINS), LOW PROFILE HEADERS & VERSATILE SOCKETS • SINGLE & DOUBLE ROW STRIPS

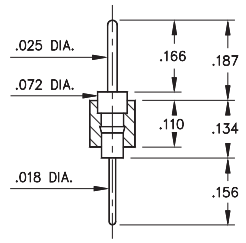

FIG. 1

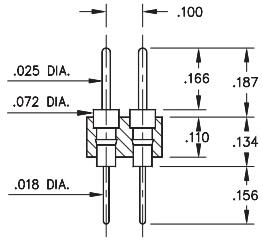

FIG. 2

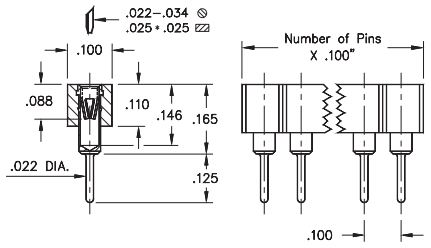

FIG. 3

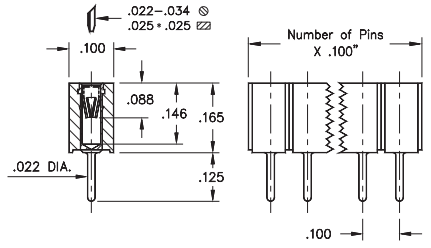

FIG. 4

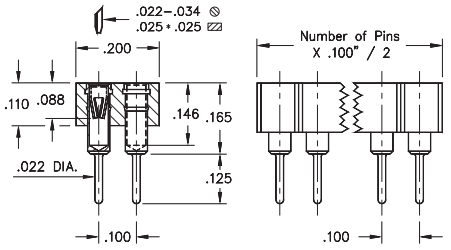

FIG. 5

- Series 350 and 450 single and double row pin headers use MM #0290 pins. See page 215 for details
- Series 801 and 803 single and double row low profile sockets use MM #1303 receptacles. See page 180 for details
- Series 801 and 803 receptacles use Hi-Rel, 6-finger BeCu #16 contact rated at 4.5 amps. Receptacles accept .025" diameter and .025" square pins. See page 256 for details
- Insulators are high temperature thermoplastic, suitable for all soldering operations

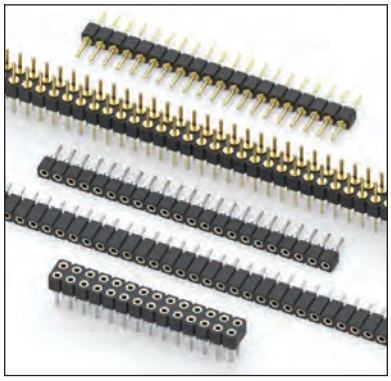

ORDERING INFORMATION

FIG. 1	**Series 350...001**	**Single Row .025" Pin / .018" Solder Tail**		
	350-XX-1__-00-001000			
	Specify number of pins 01-64			
FIG. 2	**Series 450...001**	**Double Row .025" Pin / .018" Solder Tail**		
	450-XX-2__-00-001000			
	Specify number of pins 04-64			
	RoHS-2 2011/65/EU	XX=Plating Code See Below	*For Electrical, Mechanical & Enviromental Data, See page 264*	
SPECIFY PLATING CODE XX=	10 ◆	90	40 ◆	
Pin Plating	10 μ" Au	200 μ" Sn/Pb	200 μ" Sn	

FIG. 3	**Series 801...003**	**Low Profile Socket** (short insulator)		
	801-XX-0__-10-003000			
	Specify number of pins 01-64			
FIG. 4	**Series 801...013**	**Low Profile Socket** (long insulator)		
	801-XX-0__-10-013000			
	Specify number of pins 01-36			
FIG. 5	**Series 803...003**	**Double Row Low Profile Socket**		
	803-XX-0__-10-003000			
	Specify number of pins 04-72			
	RoHS-2 2011/65/EU	XX=Plating Code See Below	*For Electrical, Mechanical & Enviromental Data, See page 264*	

SPECIFY PLATING CODE XX=					41 ◆	43 ◆	
Sleeve (Pin)					200 μ" Sn	200 μ" Sn	
Contact (Clip)					10 μ" Au	30 μ" Au	

MILL-MAX Mill-Max Mfg. Corp. • 190 Pine Hollow Road, P.O. Box 300, Oyster Bay, NY 11771 • 516-922-6000 • Fax: 516-922-9253 • www.mill-max.com

INTERCONNECTS

SERIES 800, 801, 802, 803 • .100" GRID (.030" DIA. PINS), LOW PROFILE HEADERS & VERSATILE SOCKETS • SINGLE & DOUBLE ROW STRIPS

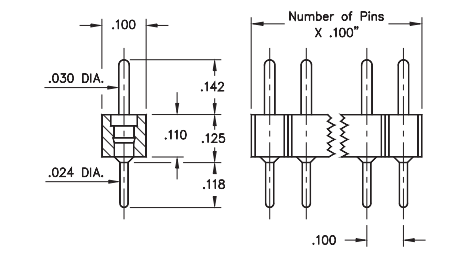

FIG. 1

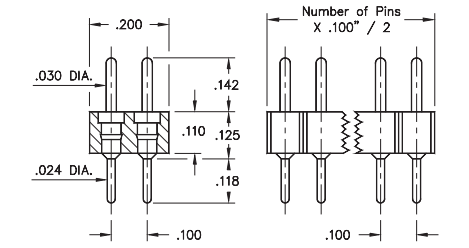

FIG. 2

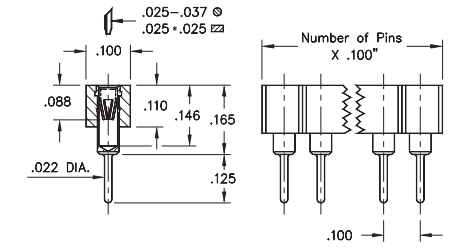

FIG. 3

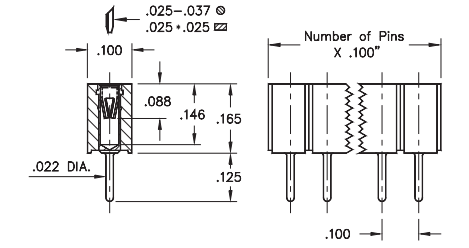

FIG. 4

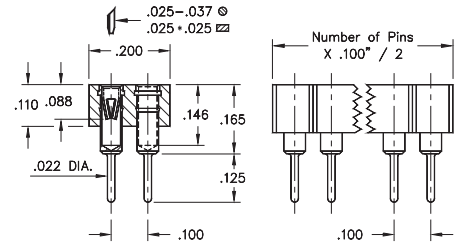

FIG. 5

- Series 800 and 802 single and double row pin headers use MM #5016 pins. See page 215 for details
- Series 801 and 803 single and double row sockets use MM #1303 receptacles. See page 180 for details
- Series 801 and 803 receptacles use Hi-Rel, 6-finger BeCu #47 contact rated at 4.5 amps. Receptacles accept .030" diameter and .025" square pins. See page 256 for details
- Insulators are high temperature thermoplastic, suitable for all soldering operations

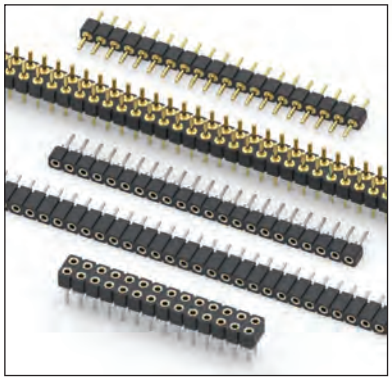

ORDERING INFORMATION

FIG. 1	**Series 800...002**	**Single Row Low Profile Pin Header**		
	800-XX-0_ _-10-002000			
	Specify number of pins	01-64		
FIG. 2	**Series 802...002**	**Double Row Low Profile Pin Header**		
	802-XX-0_ _-10-002000			
	Specify number of pins	04-64		
	RoHS-2 2011/65/EU	XX=Plating Code See Below	*For Electrical, Mechanical & Enviromental Data, See page 264*	
SPECIFY PLATING CODE XX=	10 ◆	90	40 ◆	
Pin Plating	10 µ" Au	200 µ" Sn/Pb	200 µ" Sn	

FIG. 3	**Series 801...002**	**Low Profile Socket** (short insulator)		
	801-XX-0_ _-10-002000			
	Specify number of pins	01-64		
FIG. 4	**Series 801...012**	**Low Profile Socket** (long insulator)		
	801-XX-0_ _-10-012000			
	Specify number of pins	01-36		
FIG. 5	**Series 803...002**	**Double Row Low Profile Socket**		
	803-XX-0_ _-10-002000			
	Specify number of pins	04-72		
	RoHS-2 2011/65/EU	XX=Plating Code See Below	*For Electrical, Mechanical & Enviromental Data, See page 264*	

SPECIFY PLATING CODE XX=		91	93	99	41 ◆	43 ◆	47 ◆
Sleeve (Pin)		200 µ" Sn/Pb	200 µ" Sn/Pb	200 µ" Sn/Pb	200 µ" Sn	200 µ" Sn	200 µ" Sn
Contact (Clip)		10 µ" Au	30 µ" Au	100 µ" Sn/Pb	10 µ" Au	30 µ" Au	Au Flash

INTERCONNECTS

SERIES 800 & 801 • .100" GRID (.030" DIA. PINS), STRAIGHT & RIGHT ANGLE HEADERS AND SOCKETS • SINGLE ROW STRIPS

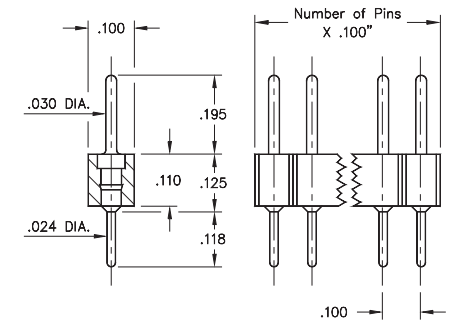

FIG. 1

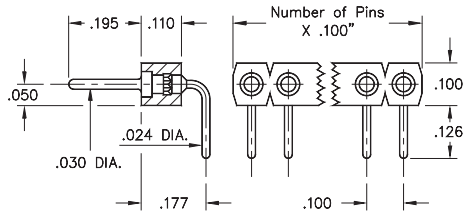

FIG. 2

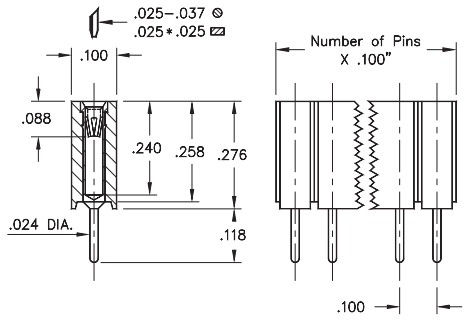

FIG. 3

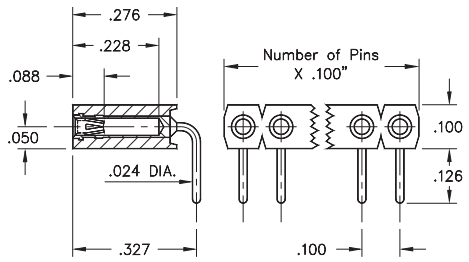

FIG. 4

- Pin interconnects available with straight MM #7007 or right angle MM #5005 solder tails. See page 215 for details
- Sockets are available with straight MM #1304 or right angle MM #1305 soldertails. See pages 177 and 179 for details
- MM #1304 and MM #1305 receptacles use Hi-Rel, 6-finger BeCu #47 contact rated at 4.5 amps. Receptacles accept .030" diameter and .025" square pins. See page 256 for details
- Insulators are high temperature thermoplastic, suitable for all soldering operations

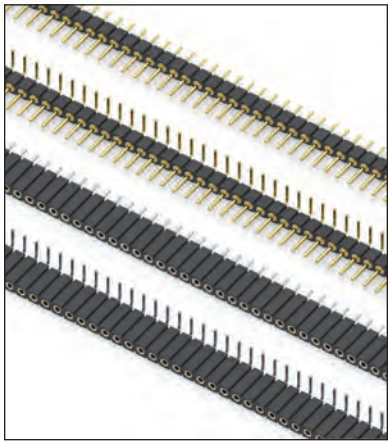

ORDERING INFORMATION

FIG. 1	**Series 800...10-001**	**Straight Pin Header**
	800-XX-0_ _-10-001000	
	Specify number of pins ↑ 01-64	
FIG. 2	**Series 800...20-001**	**Right Angle Pin Header**
	800-XX-0_ _-20-001000	
	Specify number of pins ↑ 02-64	

RoHS-2 2011/65/EU

XX=Plating Code See Below

For Electrical, Mechanical & Enviromental Data, See page 264

SPECIFY PLATING CODE XX=	10 ◆	90	40 ◆	
Pin Plating	10 µ" Au	200 µ" Sn/Pb	200 µ" Sn	

FIG. 3	**Series 801...10-001**	**Straight Socket**
	801-XX-0_ _-10-001000 ★	
	Specify number of pins ↑ 01-50	
FIG. 4	**Series 801...20-001**	**Right Angle Socket**
	801-XX-0_ _-20-001000 ★	
	Specify number of pins ↑ 01-50	

RoHS-2 2011/65/EU

XX=Plating Code See Below

For Electrical, Mechanical & Enviromental Data, See page 264

SPECIFY PLATING CODE XX=	91	93	99	41 ◆	43 ◆	44 ◆	47 ◆
Sleeve (Pin)	200 µ" Sn/Pb	200 µ" Sn/Pb	200 µ" Sn/Pb	200 µ" Sn	200 µ" Sn	200 µ" Sn	200 µ" Sn
Contact (Clip)	10 µ" Au	30 µ" Au	100 µ" Sn/Pb	10 µ" Au	30 µ" Au	100 µ" Sn	Au Flash

★ 44 Plating Non-Standard

MILL-MAX Mill-Max Mfg. Corp. • 190 Pine Hollow Road, P.O. Box 300, Oyster Bay, NY 11771 • 516-922-6000 • Fax: 516-922-9253 • www.mill-max.com

SERIES 802 & 803 • .100" GRID (.030" DIA. PINS), STRAIGHT & RIGHT ANGLE HEADERS AND SOCKETS • DOUBLE ROW STRIPS

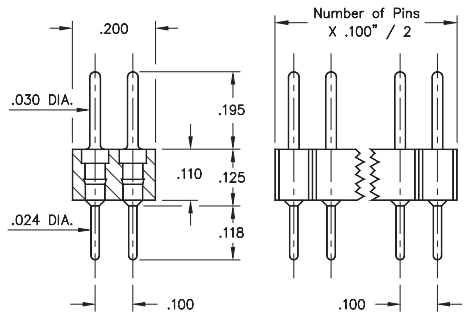

FIG. 1

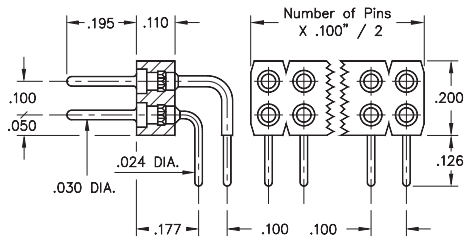

FIG. 2

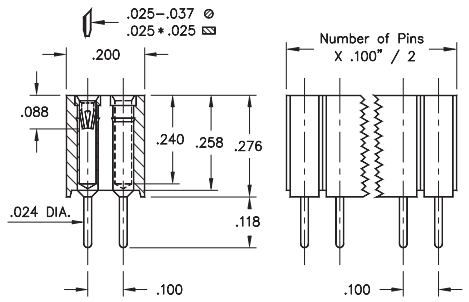

FIG. 3

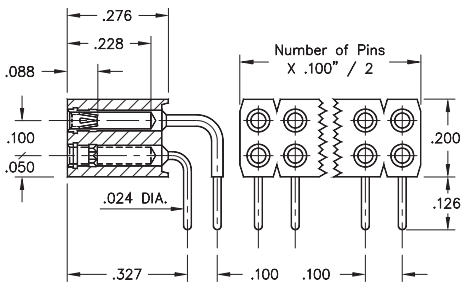

FIG. 4

- Pin interconnects available with straight MM #7007 or right angle MM #5005/5107 solder tails. See page 215 for details
- Sockets are available with straight MM #1304 or right angle MM #1305/1306 soldertails. See pages 177 and 179 for details
- MM #1304, #1305 and #1306 receptacles use Hi-Rel, 6-finger BeCu #47 contact rated at 4.5 amps. Receptacles accept .030" diameter and .025" square pins. See page 256 for details
- Insulators are high temperature thermoplastic, suitable for all soldering operations

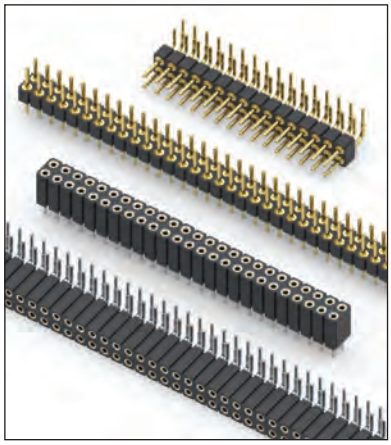

ORDERING INFORMATION

FIG. 1	**Series 802...10-001**	**Straight Pin Header**
	802-XX-0_ _-10-001000	
	Specify number of pins ← 04-64	
FIG. 2	**Series 802...20-001**	**Right Angle Pin Header**
	802-XX-0_ _-20-001000	
	Specify number of pins ← 02-64	

RoHS-2 2011/65/EU

XX=Plating Code See Below

For Electrical, Mechanical & Enviromental Data, See page 264

SPECIFY PLATING CODE XX=	10 ◆	90	40 ◆	
Pin Plating	10 µ" Au	200 µ" Sn/Pb	200 µ" Sn	

FIG. 3	**Series 803...10-001**	**Straight Socket**
	803-XX-_ _ _-10-001000	
	Specify number of pins ← 004-100	
FIG. 4	**Series 803...20-001**	**Right Angle Socket**
	803-XX-_ _ _-20-001000	
	Specify number of pins ← 002-100	

RoHS-2 2011/65/EU

XX=Plating Code See Below

For Electrical, Mechanical & Enviromental Data, See page 264

SPECIFY PLATING CODE XX=		91	93	99	41 ◆	43 ◆	47 ◆
Sleeve (Pin)		200 µ" Sn/Pb	200 µ" Sn/Pb	200 µ" Sn/Pb	200 µ" Sn	200 µ" Sn	200 µ" Sn
Contact (Clip)		10 µ" Au	30 µ" Au	100 µ" Sn/Pb	10 µ" Au	30 µ" Au	Au Flash

INTERCONNECTS

SERIES 800 & 801 • .100" GRID (.030" DIA. PINS), SOLDERLESS PRESS-FIT • SINGLE ROW STRIPS

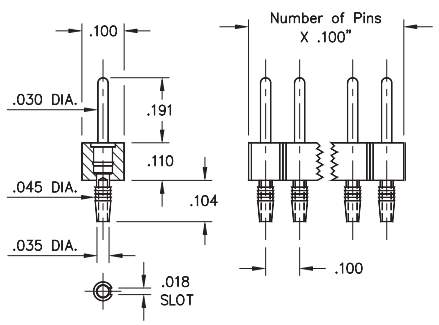

FIG. 1

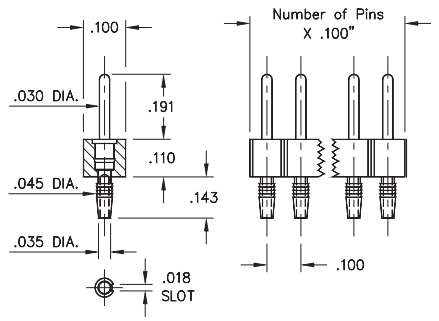

FIG. 2

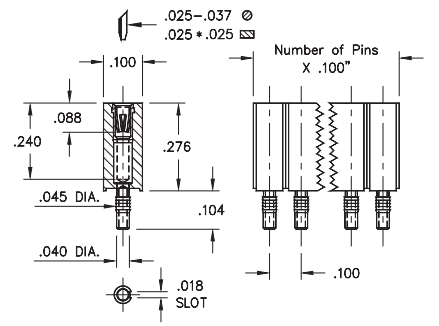

FIG. 3

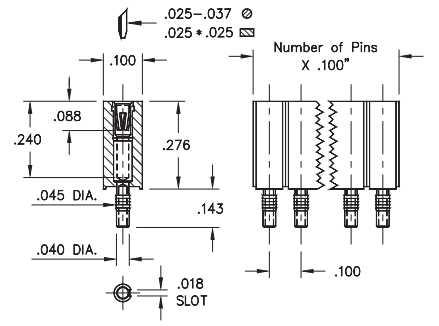

FIG. 4

- The unique compliant tail pins conform to .040"± .003" finished hole without stressing inner layers. Patent No. 4,799,904
- Headers and sockets are available for board thicknesses of .060" - .100" and .090" - .130". See ordering information for details
- Series 800 pin headers use MM #5601 and #5602 compliant tail pins featuring a .030" dia. mating lead. See page 220 for details
- Series 801 sockets MM #4614 or #4615 use Hi-Rel, 6-finger BeCu #47 contact rated at 4.5 amps. Receptacles accept .030" diameter pins & .025" square pins. See pg. 256 for details
- Insulators are high temperature thermoplastic

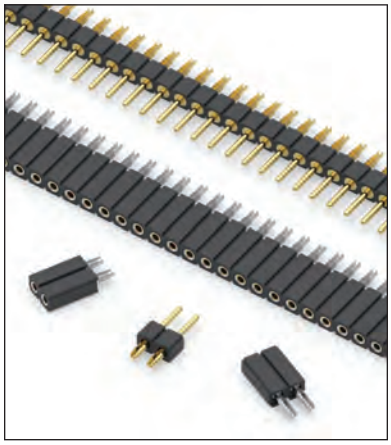

ORDERING INFORMATION

FIG. 1	**Compliant Tail Pin Header for .060" - .100" Thick Boards** 800-XX-0_ _-61-001000 **Specify number of pins** 01-64
FIG. 2	**Compliant Tail Pin Header for .090" - .130" Thick Boards** 800-XX-0_ _-62-001000 **Specify number of pins** 01-64

RoHS-2 2011/65/EU

XX=Plating Code See Below

For Electrical, Mechanical & Enviromental Data, See page 264

SPECIFY PLATING CODE XX=	10 ◆	90	40 ◆	
Pin Plating	10 µ" Au	200 µ" Sn/Pb	200 µ" Sn	

FIG. 3	**Compliant Tail Socket for .060" - .100" Thick Boards** 801-XX-0_ _-61-001000 **Specify number of pins** 01-50
FIG. 4	**Compliant Tail Socket for .090" - .130" Thick Boards** 801-XX-0_ _-62-001000 **Specify number of pins** 01-50

RoHS-2 2011/65/EU

XX=Plating Code See Below

For Electrical, Mechanical & Enviromental Data, See page 264

SPECIFY PLATING CODE XX=		91	93	99	41 ◆	43 ◆	
Sleeve (Pin)		200 µ" Sn/Pb	200 µ" Sn/Pb	200 µ" Sn/Pb	200 µ" Sn	200 µ" Sn	
Contact (Clip)		10 µ" Au	30 µ" Au	100 µ" Sn/Pb	10 µ" Au	30 µ" Au	

MILL-MAX Mill-Max Mfg. Corp. • 190 Pine Hollow Road, P.O. Box 300, Oyster Bay, NY 11771 • 516-922-6000 • Fax: 516-922-9253 • www.mill-max.com

SERIES 802 & 803 • .100" GRID (.030" DIA. PINS), SOLDERLESS PRESS-FIT • DOUBLE ROW STRIPS

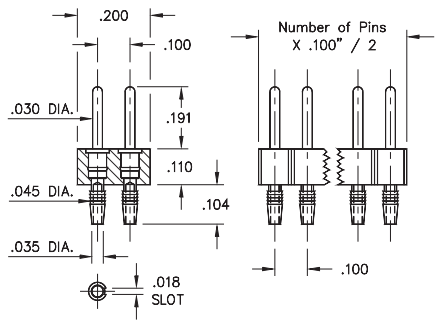

FIG. 1

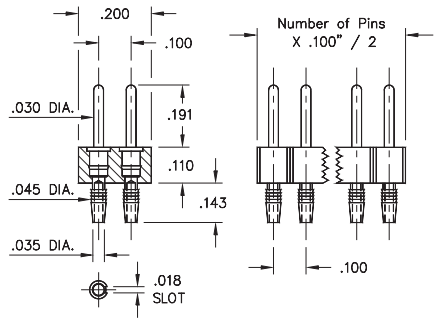

FIG. 2

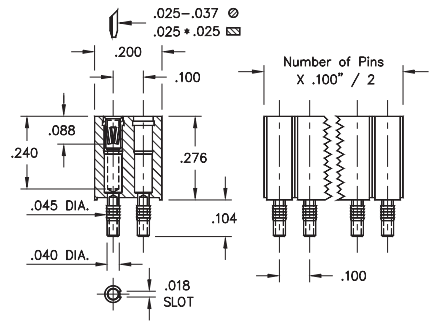

FIG. 3

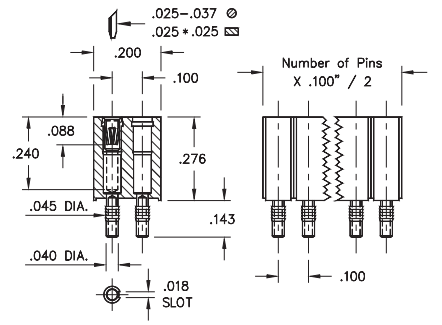

FIG. 4

- The unique compliant tail pins conform to .040"± .003" finished hole without stressing inner layers. Patent No. 4,799,904
- Headers and sockets are available for board thicknesses of .060" - .100" and .090" - .130". See ordering information for details
- Series 802 pin headers use MM #5601 and #5602 compliant tail pins featuring a .030" dia. mating lead. See page 220 for details
- Series 803 sockets with MM #4614 or #4615 pins use Hi-Rel, 6-finger BeCu #47 contact rated at 4.5 amps. Receptacles accept .030" diameter pins & .025" square pins. See pg. 256 for details
- Insulators are high temperature thermoplastic

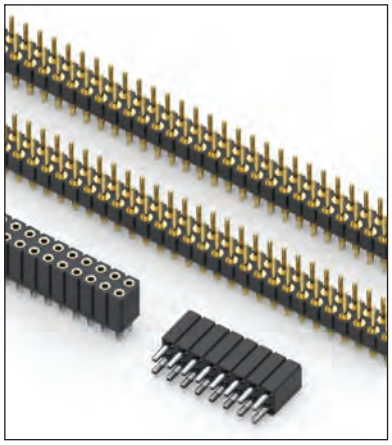

ORDERING INFORMATION

FIG. 1	**Compliant Tail Pin Header for .060" - .100" Thick Boards**
	802-XX-0_ _-61-001000
	Specify number of pins ← 04-64
FIG. 2	**Compliant Tail Pin Header for .090" - .130" Thick Boards**
	802-XX-0_ _-62-001000
	Specify number of pins ← 04-64

RoHS-2 2011/65/EU

XX=Plating Code See Below

For Electrical, Mechanical & Enviromental Data, See page 264

SPECIFY PLATING CODE XX=	10 ◆	90	40 ◆	
Pin Plating	10 µ" Au	200 µ" Sn/Pb	200 µ" Sn	

FIG. 3	**Compliant Tail Socket for .060" - .100" Thick Boards**
	803-XX-_ _ _-61-001000
	Specify number of pins ← 004-100
FIG. 4	**Compliant Tail Socket for .090" - .130" Thick Boards**
	803-XX-_ _ _-62-001000
	Specify number of pins ← 004-100

RoHS-2 2011/65/EU

XX=Plating Code See Below

For Electrical, Mechanical & Enviromental Data, See page 264

SPECIFY PLATING CODE XX=	11 ◆	13 ◆	91	93	99	41 ◆	43 ◆	44 ◆
Sleeve (Pin)	10 µ" Au	10 µ" Au	200 µ" Sn/Pb	200 µ" Sn/Pb	200 µ" Sn/Pb	200 µ" Sn	200 µ" Sn	200 µ" Sn
Contact (Clip)	10 µ" Au	30 µ" Au	10 µ" Au	30 µ" Au	100 µ" Sn/Pb	10 µ" Au	30 µ" Au	100 µ" Sn

SERIES 800 & 802 • .100" GRID (.030" DIA. PINS), SHROUDED STRAIGHT, SURFACE MOUNT & SOLDERLESS PRESS-FIT • SINGLE AND DOUBLE ROW STRIPS

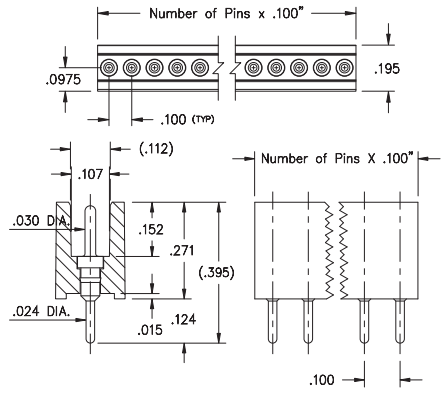

FIG. 1

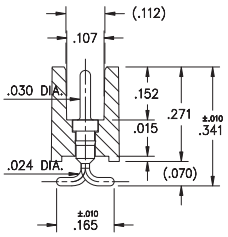

FIG. 2

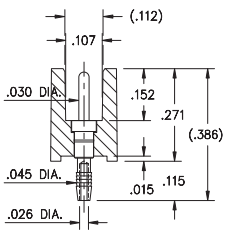

FIG. 3

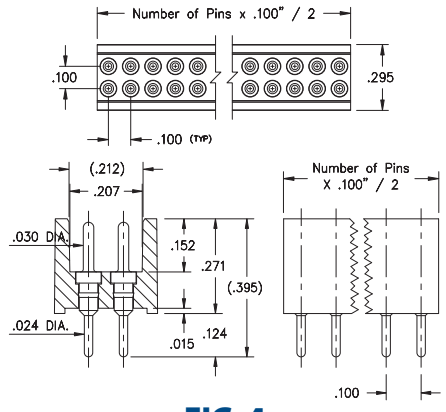

FIG. 4

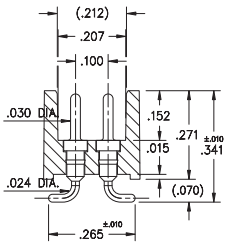

FIG. 5

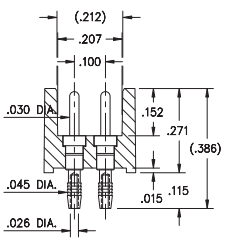

FIG. 6

- Shrouded pin interconnects available with straight Series 800...10-052 and 802...10-052 or surface mount 800...30-052 and 802...30-052 use MM #5016 pins. See page 215 for details
- Shrouded pin interconnects with solderless press-fit Series 800...61-051 and 802...61-051 use MM #5607 pins. See page 213 for details. The unique compliant tail pins conform to .040" ± .003" finished hole without stressing inner layers. Patent No. 4,799,904
- Insulators are high temperature thermoplastic, suitable for all soldering operations

ORDERING INFORMATION

FIG. 1	**Series 800...10-052**	**Straight Pin Header**
	800-10-0_ _-10-052000	
	Specify number of pins	01-32
FIG. 2	**Series 800...30-052**	**Surface Mount Pin Header**
	800-10-0_ _-30-052000	
	Specify number of pins	03-32
FIG. 3	**Series 800...61-051**	**Compliant Tail Pin Header**
	800-10-0_ _-61-051000	
	Specify number of pins	01-32
FIG. 4	**Series 802...10-052**	**Straight Pin Header**
	802-10-0_ _-10-052000	
	Specify number of pins	04-64
FIG. 5	**Series 802...30-052**	**Surface Mount Pin Header**
	802-10-0_ _-30-052000	
	Specify number of pins	04-64
FIG. 6	**Series 802...61-051**	**Compliant Tail Pin Header**
	802-10-0_ _-61-051000	
	Specify number of pins	04-64

RoHS-2 2011/65/EU

XX=Plating Code See Below

For Electrical, Mechanical & Enviromental Data, See page 264

SPECIFY PLATING CODE XX=	10 ◇			
Pin Plating	10 µ" Au			

MILL-MAX® Mill-Max Mfg. Corp. • 190 Pine Hollow Road, P.O. Box 300, Oyster Bay, NY 11771 • 516-922-6000 • Fax: 516-922-9253 • www.mill-max.com

SERIES 888 • 2MM GRID (.032" AND .044" DIA. PINS), SIGNAL POWER SHROUDED HEADER & SOCKET CONNECTOR

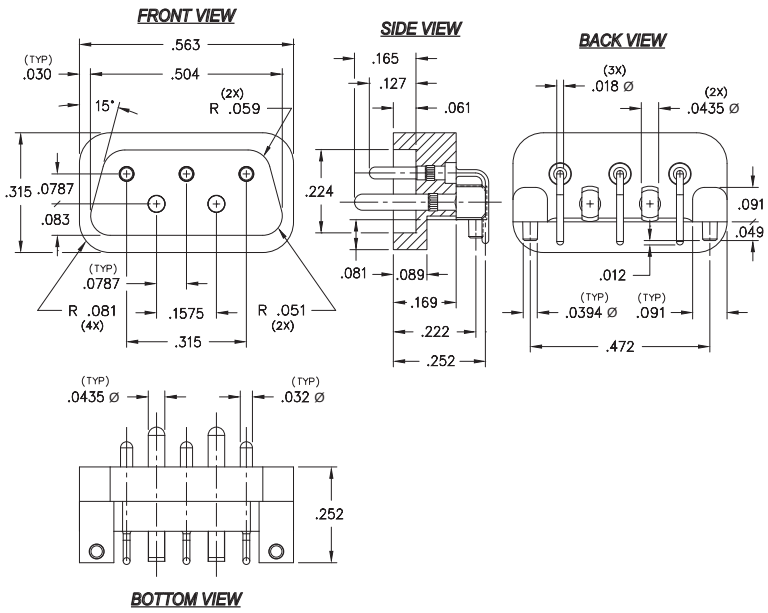

FIG. 1 (Right Angle Mount Header)

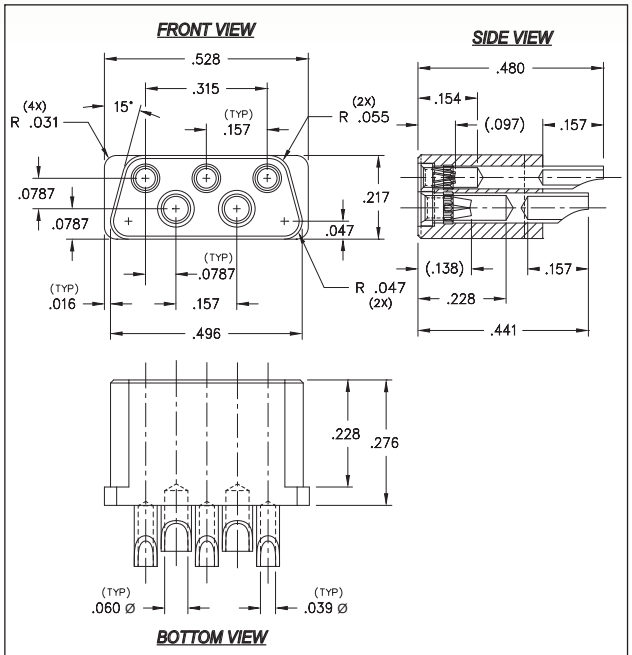

FIG. 2 (Wire Termination Socket)

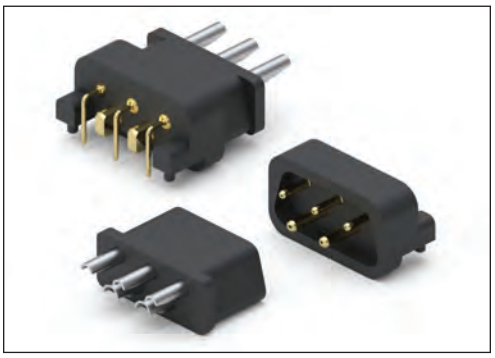

- Series 888_002 right angle & surface mount P.C.B. headers have .032" & .044" dia. pins (MM #5065, #5066). See pages 213 and 224 for details
- Series 888_001 mating soldercup sockets use (MM #5070-0 and #5084-0) receptacles for terminating 22 AWG & 18AWG stranded wires. See pages 176 and 185 for details
- Receptacles use Hi-Rel, 6-finger BeCu #16 contacts rated at 4.5 amps and Hi-Rel, 4-finger BeCu #34 contacts rated at 8 amps. See pages 256 and 258 for details
- Insulators are high temperature thermoplastic, suitable for all soldering operations and shrouded for accurate alignment

ORDERING INFORMATION

FIG. 1 — **Series 888...002 — 5 Pin Right Angle Board Mount Header**

888-30-005-20-002000

RoHS-2 2011/65/EU

XX=Plating Code See Below

For Electrical, Mechanical & Enviromental Data, See page 264

SPECIFY PLATING CODE XX=		30 ◆		
Pin Plating		30 µ" Au		

FIG. 2 — **Series 888...001 — 5 Pin Wire Termination Socket**

888-93-005-00-001000

RoHS-2 2011/65/EU

XX=Plating Code See Below

For Electrical, Mechanical & Enviromental Data, See page 264

SPECIFY PLATING CODE XX=			93 ◆				
Sleeve (Pin)			200 µ" Sn/Pb				
Contact (Clip)			30 µ" Au				

SERIES 808 & 809 • .100" GRID (.018" DIA. PINS), STRAIGHT, SIGNAL POWER SHROUDED HEADER & SOCKET CONNECTOR

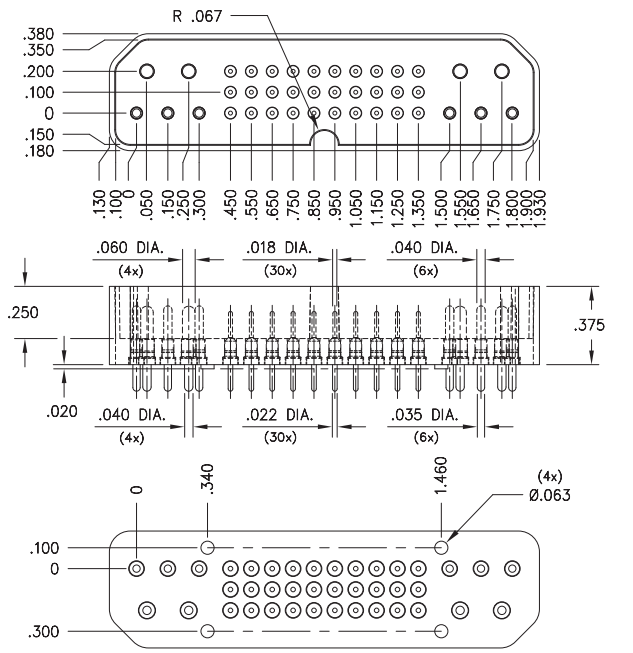

FIG. 1 (Signal Power Header)

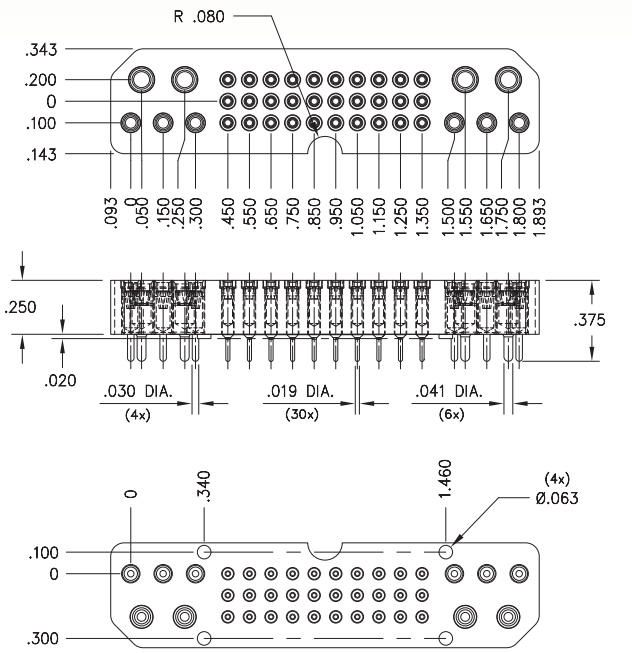

FIG. 2 (Signal Power Socket)

- Series 808 and 809 signal power header & socket have a mated height of .415"
- Series 808 headers have .018" diameter (MM #3503), .040" diameter (MM #3502) and .060" diameter (MM #3501) solder tails. See pages 213 and 214 for details
- Series 809 sockets use MM #0405-0, #8852-0 and #9324-0 receptacles. See pages 170, 182 and 189 for details
- Receptacles use Hi-Rel, 4-finger BeCu #32 and #34 contacts & Hi-Rel, 6-finger BeCu #23 contacts. See pages 253, 258 and 260 for details
- Insulators are high temperature thermoplastic, suitable for most soldering processes, and feature standoffs to promote solder flow

ORDERING INFORMATION

FIG. 1	Series 808...151	Shrouded Signal Power Header		
	808-10-040-10-151000			
RoHS-2 2011/65/EU	XX=Plating Code See Below	For Electrical, Mechanical & Enviromental Data, See page 264		
SPECIFY PLATING CODE XX=	10 ◆			
Pin Plating	10 µ" Au			

FIG. 2	Series 809...001	Signal Power Socket					
	809-43-040-10-001000						
RoHS-2 2011/65/EU	XX=Plating Code See Below	For Electrical, Mechanical & Enviromental Data, See page 264					
SPECIFY PLATING CODE XX=						43 ◆	
Sleeve (Pin)						200 µ" Sn	
Contact (Clip)						30 µ" Au	

MILL-MAX Mill-Max Mfg. Corp. • 190 Pine Hollow Road, P.O. Box 300, Oyster Bay, NY 11771 • 516-922-6000 • Fax: 516-922-9253 • www.mill-max.com

INTERCONNECTS

SERIES 349, 449, 800, 801, 802, 803 • .100" GRID (.030" DIA. PINS), SURFACE MOUNT HEADERS & SOCKETS • SINGLE AND DOUBLE ROW STRIPS

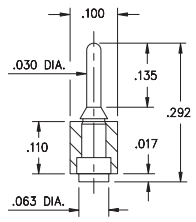

FIG. 1

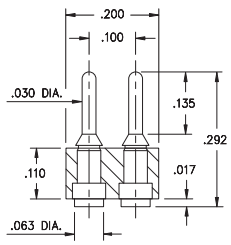

FIG. 2

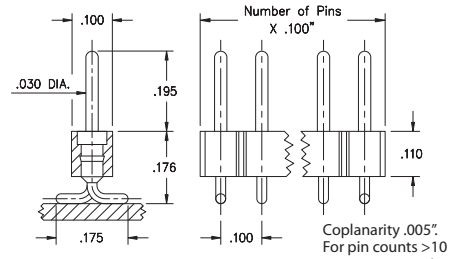

Coplanarity .005". For pin counts >10 positions, consult Technical Support.

FIG. 3

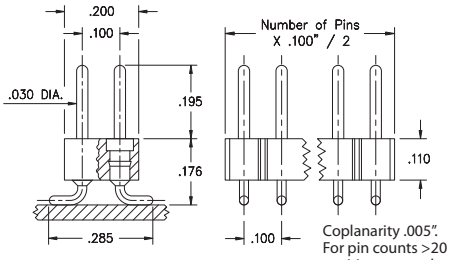

Coplanarity .005". For pin counts >20 positions, consult Technical Support.

FIG. 4

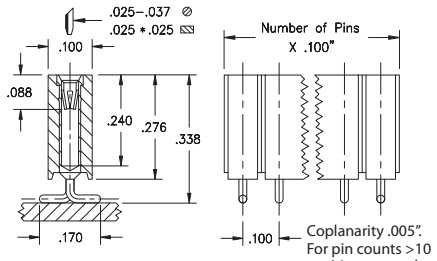

Coplanarity .005". For pin counts >10 positions, consult Technical Support.

FIG. 5

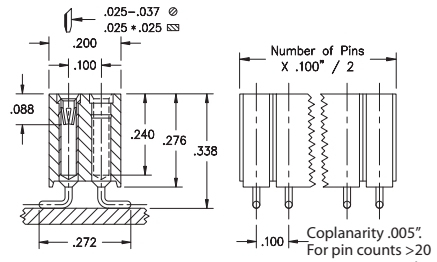

Coplanarity .005". For pin counts >20 positions, consult Technical Support.

FIG. 6

- Series 349 & 449 use MM #4956-1 pins. See page 218 for details
- Series 800 & 802 use MM #7007 pins. See page 215 for details
- Series 801 & 803 use MM #1304 receptacles and accept pin diameters from .025"-.037" and .025" square pins. See page 177 for details
- Receptacles use Hi-Rel, 6-finger BeCu #47 contact rated at 4.5 amps. See page 256 for details
- Insulators are high temperature thermoplastic, suitable for all soldering operations

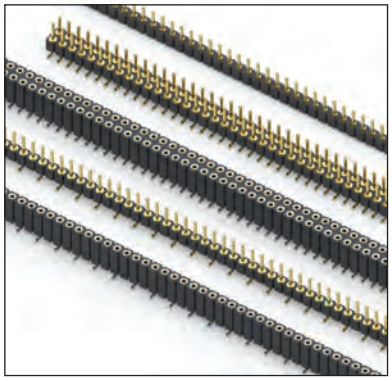

ORDERING INFORMATION

FIG. 1	**Series 349...560**	**Single Row Surface Mount Header**
	349-10-1_ _-00-560000	
	Specify number of pins	02-64
FIG. 2	**Series 449...560**	**Double Row Surface Mount Header**
	449-10-2_ _-00-560000	
	Specify number of pins	04-64
FIG. 3	**Series 800...001**	**Single Row Surface Mount Header**
	800-10-0_ _-30-001000	
	Specify number of pins	03-64
FIG. 4	**Series 802...001**	**Double Row Surface Mount Header**
	802-10-0_ _-30-001000	
	Specify number of pins	04-72

SPECIFY PLATING CODE XX=	10 ◆			
Pin Plating	10 µ" Au			

FIG. 5	**Series 801...001**	**Single Row Surface Mount Socket**
	801-43-0_ _-30-001000	
	Specify number of pins	03-50
FIG. 6	**Series 803...001**	**Double Row Surface Mount Socket**
	803-XX-_ _ _-30-001000	
	Specify number of pins	004-100

RoHS-2 2011/65/EU

XX=Plating Code See Below

For Electrical, Mechanical & Enviromental Data, See page 264

SPECIFY PLATING CODE XX=			93			43 ◆	
Sleeve (Pin)			200 µ"Sn/Pb			200 µ"Sn	
Contact (Clip)			30 µ"Au			30 µ"Au	

SERIES 800, 801, 830 • .100" GRID (.030" DIA. PINS), SURFACE MOUNT HEADERS AND SOCKETS • SINGLE ROW STRIPS

Mates with Series 801...002 Surface Mount Z-Bend Socket (See Fig. 3)

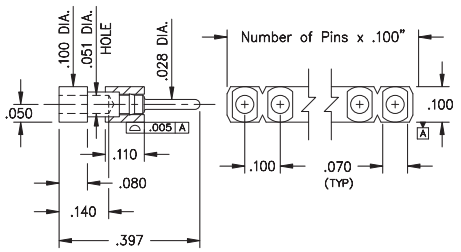

Coplanarity .005". For pin counts >10 positions, consult Technical Support.

FIG. 1

Mates with Series 801...002 Surface Mount Z-Bend Socket (See Fig. 3)

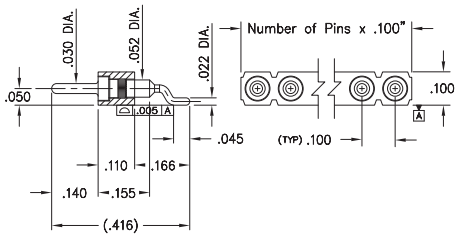

Coplanarity .005". For pin counts >10 positions, consult Technical Support.

FIG. 2

Mates with Series 800...002 and 830...028 Surface Mount Header (See Fig. 1 & 2)

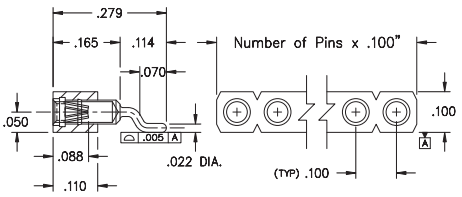

Coplanarity .005". For pin counts >10 positions, consult Technical Support.

FIG. 3

- Series 800 horizontal surface mount headers are availble with .028" dia. pluggable pins (MM #1502). Series 830 horizontal surface mount z-bend headers use MM #3028 pins. See page 224 for details
- Series 801 horizontal surface mount Z-Bend sockets uses MM #1303 receptacles that accept pin diameters from .025"-.037" and .025" square leads. See pages 180 for details
- Insulators are high temperature thermoplastic, suitable for all soldering operations
- Ideal for daisy chaining parallel boards

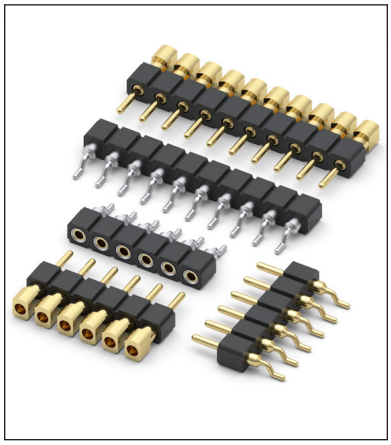

ORDERING INFORMATION

FIG. 1 — **Series 800...002 .028" Dia. Surface Mount Header**

800-10-0_ _-40-002000

Specify number of pins 02-10

FIG. 2 — **Series 830...028 .030" Dia. Surface Mount Z-Bend Header**

830-XX-0_ _-40-028000

Specify number of pins 02-10

RoHS-2 2011/65/EU

XX=Plating Code See Below

For Electrical, Mechanical & Enviromental Data, See page 264

SPECIFY PLATING CODE XX=	10 ◆		40 ◆	
Pin Plating	10 µ" Au		200 µ" Sn	

FIG. 3 — **Series 801...002 .028" Dia. Surface Mount Z-Bend Socket**

801-XX-0_ _-40-002000

Specify number of pins 02-10

RoHS-2 2011/65/EU

XX=Plating Code See Below

For Electrical, Mechanical & Enviromental Data, See page 264

SPECIFY PLATING CODE XX=		91	93	99	41 ◆	43 ◆	44 ◆
Sleeve (Pin)		200 µ" Sn/Pb	200 µ" Sn/Pb	200 µ" Sn/Pb	200 µ" Sn	200 µ" Sn	200 µ" Sn
Contact (Clip)		10 µ" Au	30 µ" Au	100 µ" Sn/Pb	10 µ" Au	30 µ" Au	100 µ" Sn

MILL-MAX® Mill-Max Mfg. Corp. • 190 Pine Hollow Road, P.O. Box 300, Oyster Bay, NY 11771 • 516-922-6000 • Fax: 516-922-9253 • www.mill-max.com

SERIES 804 & 805 • .100" GRID (.030" DIA. PINS), HEADERS AND SOCKETS • TRIPLE ROW

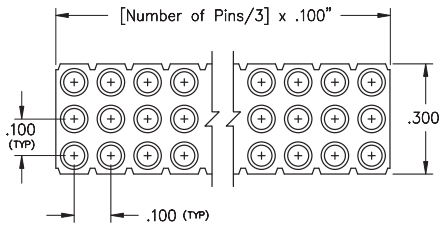

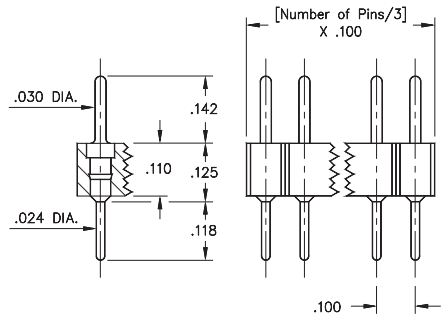

FIG. 1

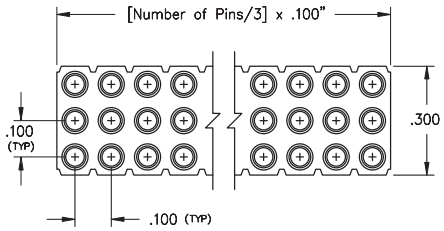

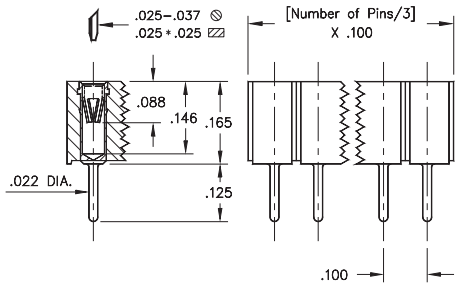

FIG. 2

- Series 804 triple row .100" grid headers uses MM #5016 pins. See page 215 for details
- Series 805 triple row .100" grid sockets uses MM #1303 pins. See page 180 for details
- Series 805 triple row .100" grid sockets uses Hi-Rel, 6-finger BeCu #47 contact rated at 4.5 amps. See page 256 for details
- Insulators are high temperature thermoplastic, suitable for all soldering operations

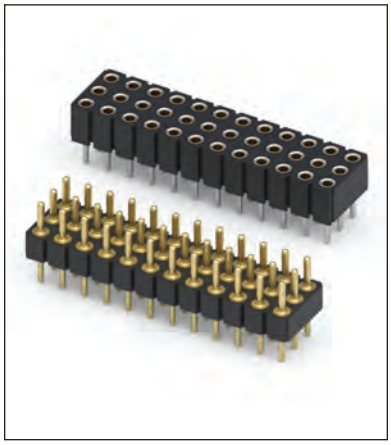

ORDERING INFORMATION

FIG. 1 — **Series 804...002** — **Straight Pin Header**

804-10-0_ _-10-002000

Specify number of pins — 09-96

RoHS-2 2011/65/EU

XX=Plating Code See Below

For Electrical, Mechanical & Enviromental Data, See page 264

SPECIFY PLATING CODE XX=	10 ◆			
Pin Plating	10 µ" Au			

FIG. 2 — **Series 805...012** — **Straight Pin Socket**

805-43-0_ _-10-012000

Specify number of pins — 09-96

RoHS-2 2011/65/EU

XX=Plating Code See Below

For Electrical, Mechanical & Enviromental Data, See page 264

SPECIFY PLATING CODE XX=						43 ◆	
Sleeve (Pin)						200 µ" Sn	
Contact (Clip)						30 µ" Au	

MILL-MAX Mill-Max Mfg. Corp. • 190 Pine Hollow Road, P.O. Box 300, Oyster Bay, NY 11771 • 516-922-6000 • Fax: 516-922-9253 • www.mill-max.com

SERIES 800, 801, 802, 803 • .100" GRID SOLDER CUP HEADERS AND SOCKETS • SINGLE AND DOUBLE ROW STRIPS

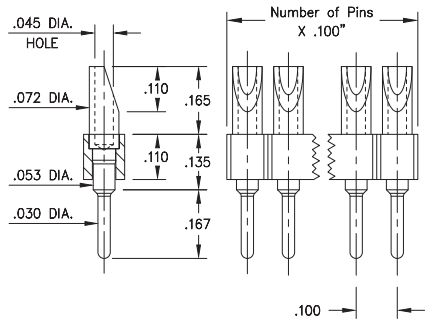

FIG. 1

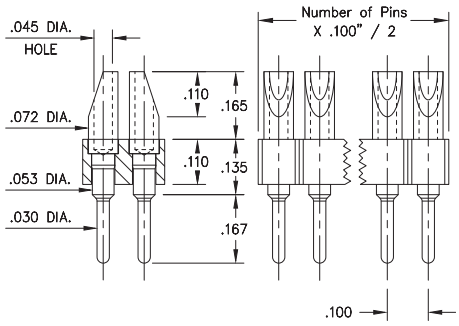

FIG. 2

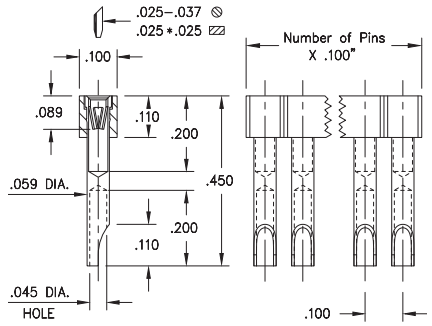

FIG. 3

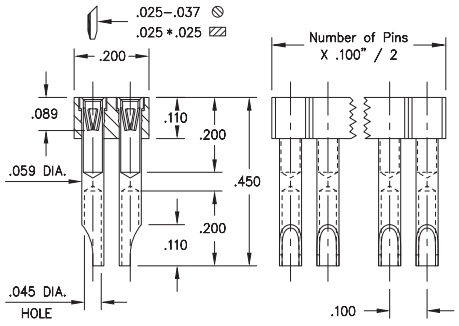

FIG. 4

- Series 800 and 802 use MM #1107 pins. See page 218 for details
- Series 801 and 803 use MM #1134 pin receptacles and accept pin diameters from .025"-.037" and .025" square pins. See page 177 for details
- Series 801 and 803 receptacles use Hi-Rel, 4-finger BeCu #47 contact rated at 4.5 amps. See page 256 for details
- Solder cups are pre-aligned and accept up to 20 AWG wire
- Insulators are high temperature thermoplastic, suitable for all soldering operations

ORDERING INFORMATION

FIG. 1	**Series 800...007**	**Single Row Solder Cup / Solder Tail**
	800-XX-0_ _-10-007000	
	Specify number of pins	02-64
FIG. 2	**Series 802...007**	**Double Row Solder Cup / Solder Tail**
	802-XX-0_ _-10-007000	
	Specify number of pins	02-64

RoHS-2 2011/65/EU

XX=Plating Code See Below

For Electrical, Mechanical & Enviromental Data, See page 264

SPECIFY PLATING CODE XX=	10 ◆		40 ◆	
Pin Plating	10 µ" Au		200 µ" Sn	

FIG. 3	**Series 801...007**	**Single Row Solder Cup Sockets**
	801-13-0_ _-10-007000	
	Specify number of pins	02-64
FIG. 4	**Series 803...007**	**Double Row Solder Cup Sockets**
	803-13-0_ _-10-007000	
	Specify number of pins	02-64

RoHS-2 2011/65/EU

XX=Plating Code See Below

For Electrical, Mechanical & Enviromental Data, See page 264

SPECIFY PLATING CODE XX=	13 ◆						
Sleeve (Pin)	10 µ" Au						
Contact (Clip)	30 µ" Au						

INTERCONNECTS

SERIES 800, 801, 802, 803 • .100" GRID (.040" DIA. PINS), HEADERS AND SOCKETS • SINGLE AND DOUBLE ROW STRIPS

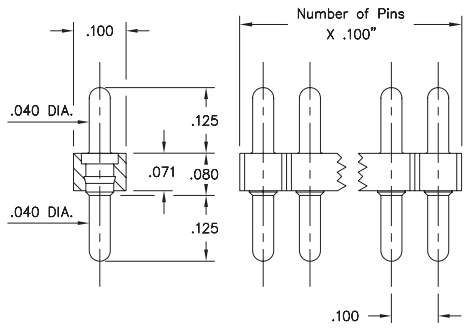

FIG. 1

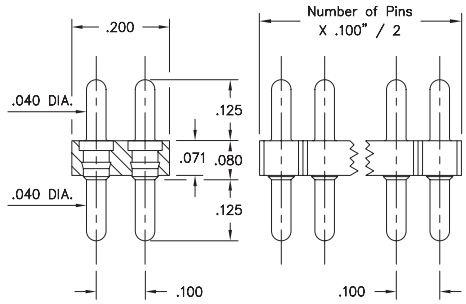

FIG. 2

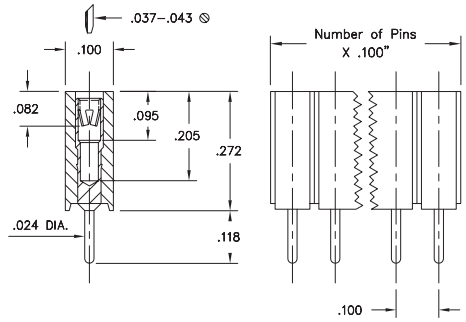

FIG. 3

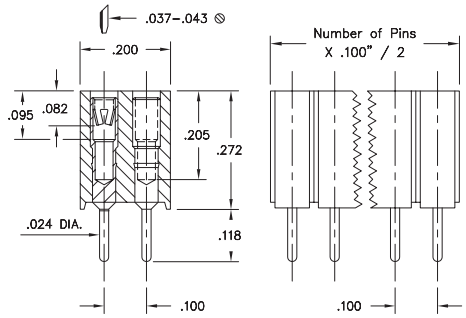

FIG. 4

- Series 800 and 802 single and double row interconnects feature sturdy .040" dia. leads (MM #3077) and low profile (.071" thick) insulator. See page 215 for details
- Series 801 and 803 single and double row sockets use MM #1313 receptacles. See page 181 for details
- Series 801 and 803 receptacles use Hi-Rel, 6-finger BeCu #18 contact rated at 8 amps. Receptacles accept .037"-.043" diameter pins. See page 257 for details
- Insulators are high temperature thermoplastic, suitable for all soldering operations

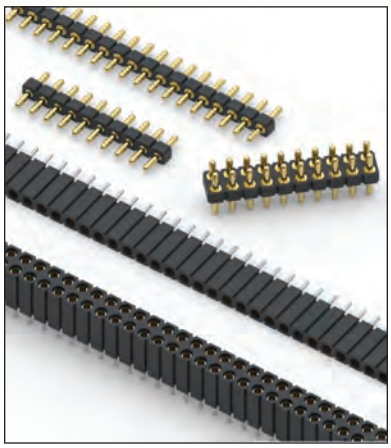

ORDERING INFORMATION

FIG. 1	**Series 800...10-004**	**Single Row Pin Header**
	800-XX-0_ _-10-004000	
	Specify number of pins ↑ 01-50	
FIG. 2	**Series 802...10-004**	**Double Row Pin Header**
	802-XX-_ _ _-10-004000	
	Specify number of pins ↑ 004-100	

RoHS-2 2011/65/EU

XX=Plating Code See Below

For Electrical, Mechanical & Enviromental Data, See page 264

SPECIFY PLATING CODE XX=	10 ◆	90	40 ◆	
Pin Plating	10 µ" Au	200 µ" Sn/Pb	200 µ" Sn	

FIG. 3	**Series 801...10-004**	**Single Row Socket**
	801-XX-0_ _-10-004000	
	Specify number of pins ↑ 01-50	
FIG. 4	**Series 803...10-004**	**Double Row Socket**
	803-XX-_ _ _-10-004000	
	Specify number of pins ↑ 004-100	

RoHS-2 2011/65/EU

XX=Plating Code See Below

For Electrical, Mechanical & Enviromental Data, See page 264

SPECIFY PLATING CODE XX=	13 ◆	91	93	99	41 ◆	43 ◆	44 ◆
Sleeve (Pin)	10 µ" Au	200 µ" Sn/Pb	200 µ" Sn/Pb	200 µ" Sn/Pb	200 µ" Sn	200 µ" Sn	200 µ" Sn
Contact (Clip)	30 µ" Au	10 µ" Au	30 µ" Au	100 µ" Sn/Pb	10 µ" Au	30 µ" Au	100 µ" Sn

MILL-MAX® Mill-Max Mfg. Corp. • 190 Pine Hollow Road, P.O. Box 300, Oyster Bay, NY 11771 • 516-922-6000 • Fax: 516-922-9253 • www.mill-max.com

SERIES 834 & 835 • .100" GRID OFP® PASS-THROUGH SOCKETS Ø.030" & □.025" PINS • SINGLE AND DOUBLE ROW STRIPS

- 834/835 Series Pass-Through Sockets have a low .130" profile and will accept Ø.030" round pin, as well as industry standard .025" square pin headers.
- They are typically used to interconnect two or more parallel circuit boards.
- Sockets are designed for hand, wave or reflow* soldering. The high temperature insulator is compatible with all solder processes.
- Unique ORGANIC FIBRE PLUG® barriers prevent solder, paste or flux from contaminating the internal spring contacts. After soldering, the OFP® barriers are pushed out of the socket when the mating header is inserted.
- Mill-Max sockets use a receptacle consisting of a precision-machined brass sleeve with a press-fit beryllium copper "multi-finger" spring contact.
- Recommended mounting holes are Ø.046 ±.003" PTH (1,2 mm drilled prior to plating).

**Intrusive reflow (also called "pin-in-paste") is a technique of using conventional through-hole components in a reflow soldering process. The pass-through socket is placed into plated through-holes in the circuit board (solder paste has previously been screen printed on pads adjacent to the holes) and the board is reflowed in the same pass as other SMT components. Solder will fill the plated through-holes and achieve solder joints as reliable as wave soldering. The OFP® barrier prevents solder paste from being picked up inside the contact during assembly.*

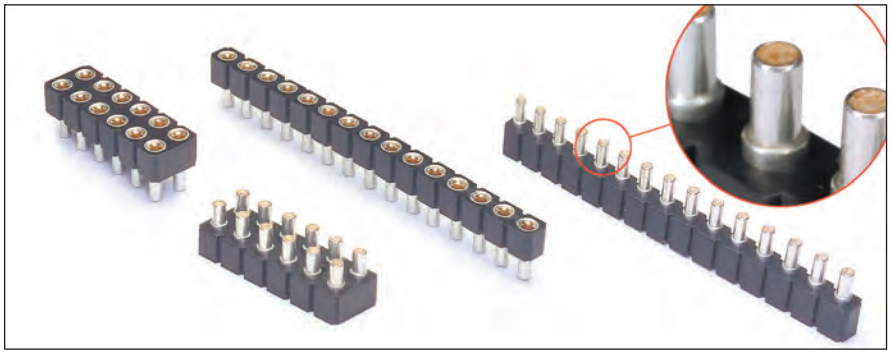

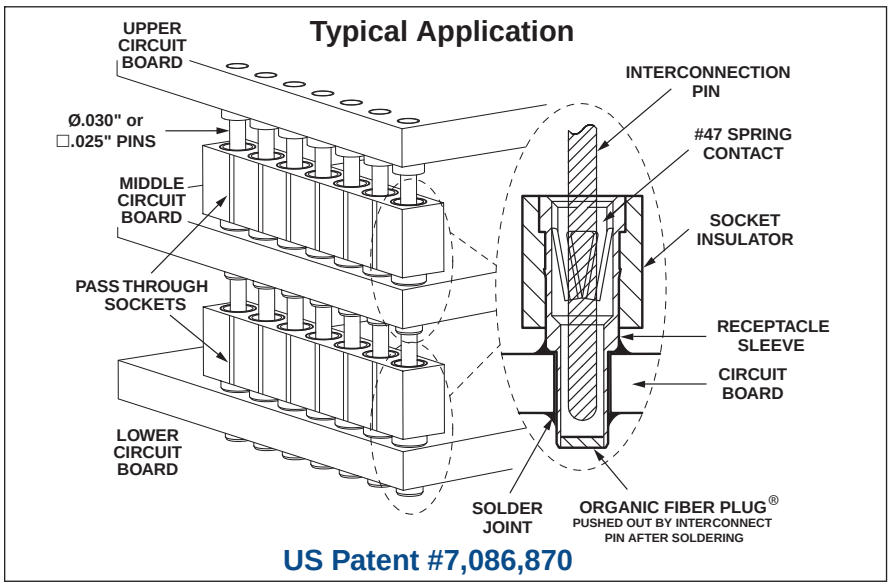

US Patent #7,086,870

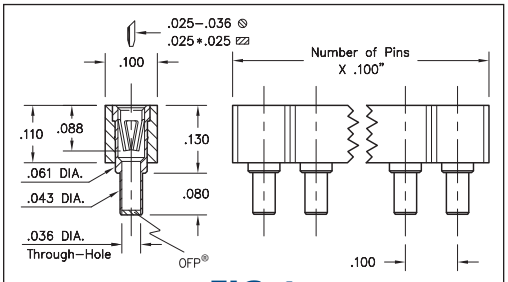

FIG. 1

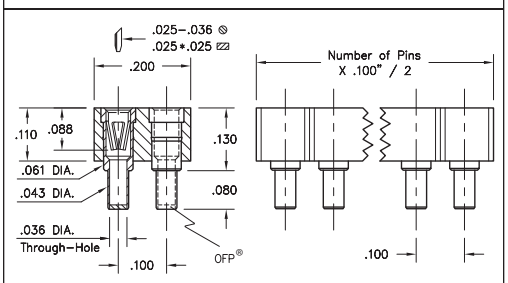

FIG. 2

ORDERING INFORMATION

FIG. 1	Series 834...001	Single Row OFP® Pass-Through Socket
	834-XX-0 _ _-10-001000	
	Specify number of pins	01-64
FIG. 2	Series 835...001	Double Row OFP® Pass-Through Socket
	835-XX-0 _ _-10-001000	
	Specify number of pins	04-72

RoHS-2 2011/65/EU

XX=Plating Code See Below

For Electrical, Mechanical & Enviromental Data, See page 264

SPECIFY PLATING CODE XX=			93			43 ◆	47 ◆
Sleeve (Pin)			200 µ" Sn/Pb			200 µ" Sn	200 µ" Sn
Contact (Clip)			30 µ" Au			30 µ" Au	Au Flash

SERIES 800 & 801 • .200" GRID (.030" DIA. PINS), STRAIGHT AND RIGHT ANGLE • SINGLE ROW STRIPS

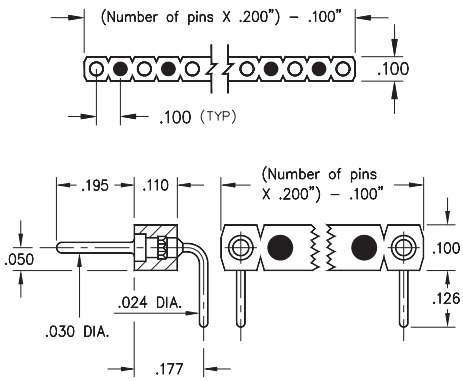

FIG. 1

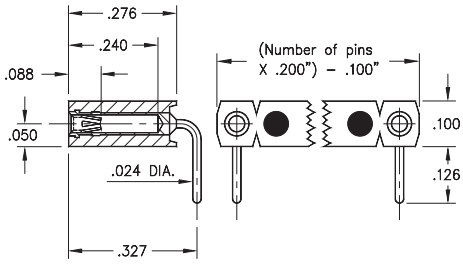

FIG. 2

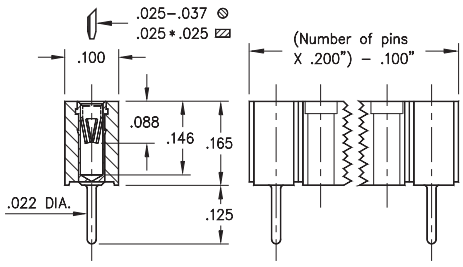

FIG. 3

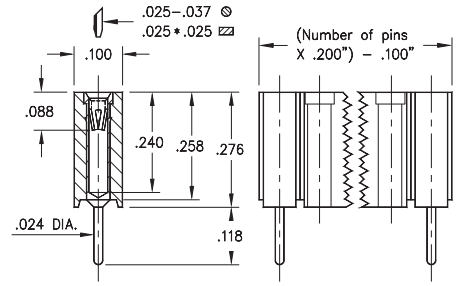

FIG. 4

- Series 800 selectively loaded headers uses MM #5005 pins. See page 215 for details
- Series 801 selectively loaded sockets use MM #1303, #1304 and #1305 pins. See pages 177, 179 & 180 for details
- Series 801 selectively loaded sockets use Hi-Rel, 6-finger BeCu #47 contact rated at 3 amps. See page 256 for details
- Insulators are high temperature thermoplastic, suitable for all soldering operations

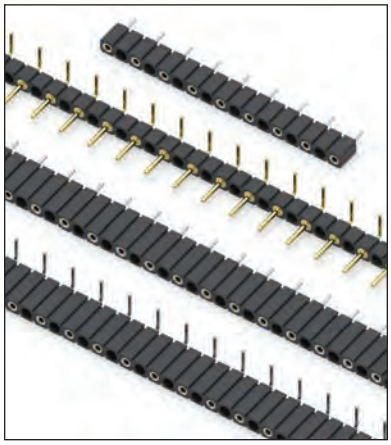

ORDERING INFORMATION

FIG. 1 — **Series 800...20-201** — **Right Angle Header**

800-10-0_ _-20-201000

Specify number of pins — 02-32

RoHS-2 2011/65/EU

XX=Plating Code See Below

For Electrical, Mechanical & Enviromental Data, See page 264

SPECIFY PLATING CODE XX=	10 ◆			
Pin Plating	10 µ" Au			

FIG. 2 — **Series 801...20-201** — **Right Angle Socket**

801-XX-0_ _-20-201000

Specify number of pins — 02-25

FIG. 3 — **Series 801...10-212** — **Straight Socket**

801-43-0_ _-10-212000

Specify number of pins — 02-18

FIG. 4 — **Series 801...10-201** — **Straight Socket**

801-43-0_ _-10-201000

Specify number of pins — 02-25

RoHS-2 2011/65/EU

XX=Plating Code See Below

For Electrical, Mechanical & Enviromental Data, See page 264

SPECIFY PLATING CODE XX=					41 ◆	43 ◆	
Sleeve (Pin)					200 µ" Sn	200 µ" Sn	
Contact (Clip)					10 µ" Au	30 µ" Au	

MILL-MAX Mill-Max Mfg. Corp. • 190 Pine Hollow Road, P.O. Box 300, Oyster Bay, NY 11771 • 516-922-6000 • Fax: 516-922-9253 • www.mill-max.com

SERIES 310, 311, 315 • .100" GRID SOLDER TAIL • SINGLE ROW STRIPS

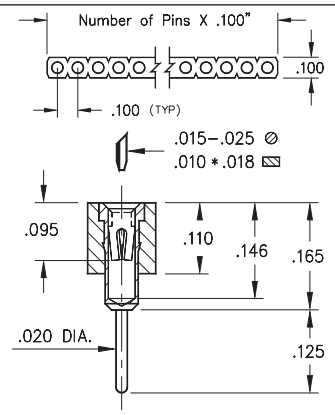

FIG. 1

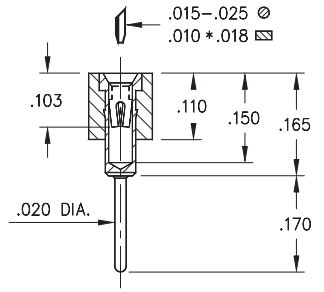

FIG. 2

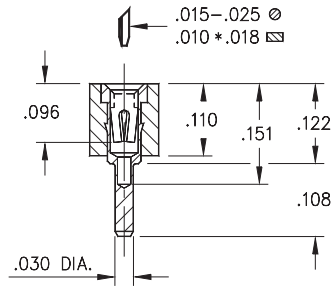

FIG. 3

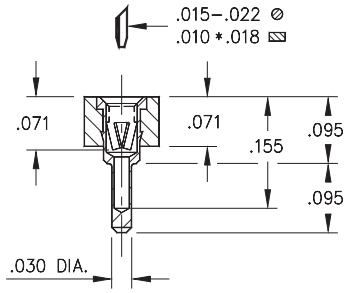

FIG. 4

- SIP sockets accept .015 - .025" diameter pins and standard IC leads
- Various solder tails available: standard length, long for multi-layer boards, very low and ultra low profile. See Mill-Max #1001, #0134, #0501 or #1534 pins. See pages 161, 162 and 165 for details
- Hi-Rel, 4-finger BeCu #12 and #30 contact are rated at 3 amps. See pages 252 and 253 for details
- Insulators are high temperature thermoplastic, suitable for all soldering operations

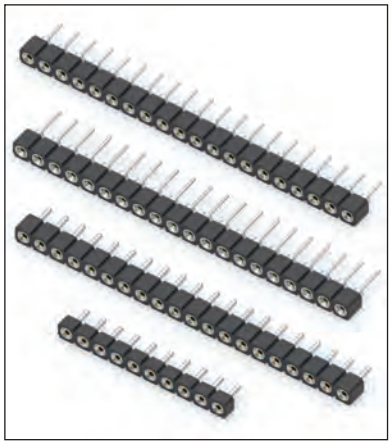

ORDERING INFORMATION

FIG. 1	**Series 310...001**	**Standard Solder Tail**
	310-XX-1__-41-001000 **Specify number of pins** ↑ 01-64	
FIG. 2	**Series 311...001**	**Long Solder Tail**
	311-XX-1__-41-001000 ★ **Specify number of pins** ↑ 01-64	
FIG. 3	**Series 315...001**	**Very Low Profile**
	315-XX-1__-41-001000 ★ **Specify number of pins** ↑ 01-64	
FIG. 4	**Series 315...003**	**Ultra Low Profile**
	315-XX-1__-41-003000 ★ **Specify number of pins** ↑ 01-64	

RoHS-2 2011/65/EU

XX=Plating Code See Below

For Electrical, Mechanical & Enviromental Data, See page 264

SPECIFY PLATING CODE XX=	11 ◆	13 ◆	91	93	99	41 ◆	43 ◆	44 ◆	47 ◆
Sleeve (Pin)	10 µ" Au	10 µ" Au	200 µ"Sn/Pb	200 µ"Sn/Pb	200 µ"Sn/Pb	200 µ" Sn	200 µ" Sn	200 µ" Sn	200 µ" Sn
Contact (Clip)	10 µ" Au	30 µ" Au	10 µ" Au	30 µ" Au	100 µ"Sn/Pb	10 µ" Au	30 µ" Au	100 µ" Sn	Au Flash

★ 41 & 91 Platings Non-Standard

INTERCONNECTS

SERIES 410, 411, 415 • .100" GRID SOLDER TAIL • DOUBLE ROW STRIPS

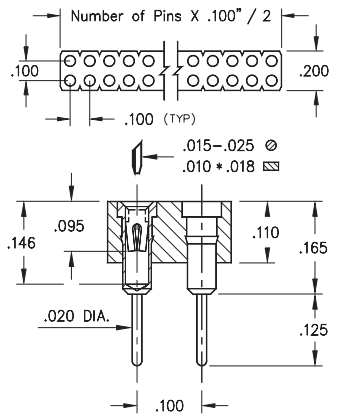

FIG. 1

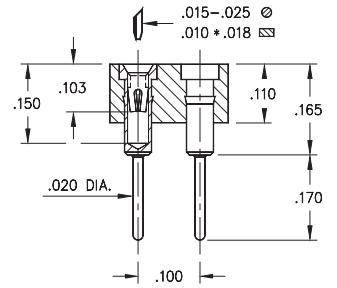

FIG. 2

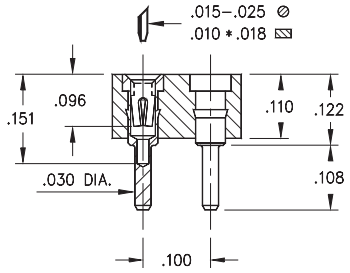

FIG. 3

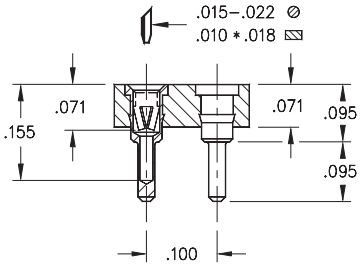

FIG. 4

- Series 41X double row strip sockets are on .100" grid
- Various solder tails available: standard length, long for multi-layer boards, very low and ultra low profile. See Mill-Max #1001, #0134, #0501 or #1534 pins. See pages 161, 162 and 165 for details
- Hi-Rel, 4-finger BeCu #12 and #30 contact are rated at 3 amps. See pages 252 and 253 for details
- Insulators are high temperature thermoplastic, suitable for all soldering operations

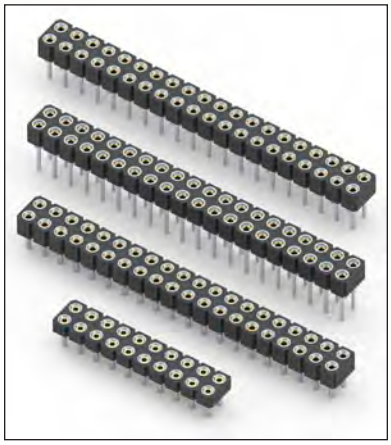

ORDERING INFORMATION

FIG. 1	**Series 410...001**	**Standard Solder Tail**
	410-XX-2_ _-41-001000	
	Specify number of pins ↑ 04-64	
FIG. 2	**Series 411...001**	**Long Solder Tail**
	411-XX-2_ _-41-001000	
	Specify number of pins ↑ 04-64	
FIG. 3	**Series 415...001**	**Very Low Profile**
	415-XX-2_ _-41-001000	
	Specify number of pins ↑ 04-64	
FIG. 4	**Series 415...003**	**Ultra Low Profile**
	415-XX-2_ _-41-003000	
	Specify number of pins ↑ 04-64	

RoHS-2 2011/65/EU

XX=Plating Code See Below

For Electrical, Mechanical & Enviromental Data, See page 264

SPECIFY PLATING CODE XX=	11 ◆	13 ◆	91	93	41 ◆	43 ◆	47 ◆
Sleeve (Pin)	10 µ" Au	10 µ" Au	200 µ" Sn/Pb	200 µ" Sn/Pb	200 µ" Sn	200 µ" Sn	200 µ" Sn
Contact (Clip)	10 µ" Au	30 µ" Au	10 µ" Au	30 µ" Au	10 µ" Au	30 µ" Au	Au Flash

MILL-MAX® Mill-Max Mfg. Corp. • 190 Pine Hollow Road, P.O. Box 300, Oyster Bay, NY 11771 • 516-922-6000 • Fax: 516-922-9253 • www.mill-max.com

INTERCONNECTS

SERIES 311 & 411 • .100" GRID LONG SOLDER TAIL • SINGLE AND DOUBLE ROW STRIPS

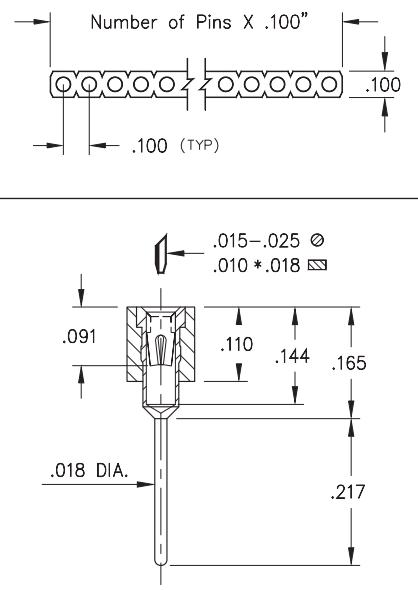

FIG. 1

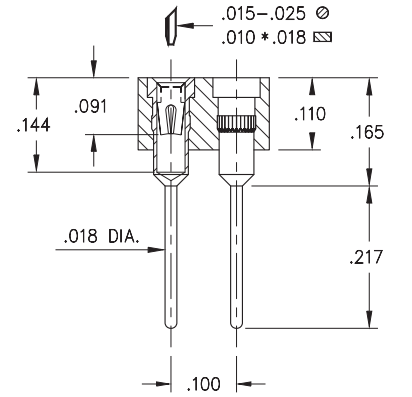

FIG. 2

- SIP sockets accept .015" - .025" diameter pins and standard IC leads. Longer lead length for soldering to multi-layer boards
- Series 311 & 411 use MM #1103 pins. See page 166 for details
- Hi-Rel, 4-finger BeCu #30 contact is rated at 3 amps. See page 253 for details
- Insulators are high temperature thermoplastic, suitable for all soldering operations

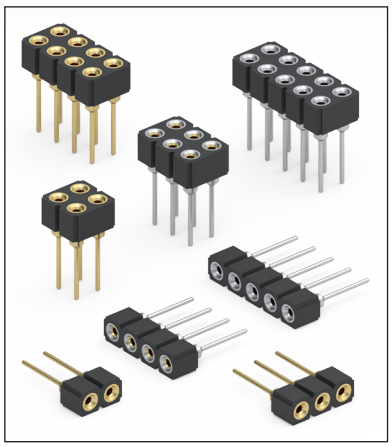

ORDERING INFORMATION

FIG. 1	**Series 311...003**	**Single Row Long Solder Tail**
	311-XX-1__-41-003000	
	Specify number of pins ↑ 01-64	
FIG. 2	**Series 411...003**	**Double Row Long Solder Tail**
	411-XX-2__-41-003000	
	Specify number of pins ↑ 04-64	

RoHS-2 2011/65/EU

XX=Plating Code See Below

For Electrical, Mechanical & Enviromental Data, See page 264

SPECIFY PLATING CODE XX=		13 ◆	93	99	43 ◆	44 ◆	47 ◆
Sleeve (Pin)		10 µ" Au	200 µ" Sn/Pb	200 µ" Sn/Pb	200 µ" Sn	200 µ" Sn	200 µ" Sn
Contact (Clip)		30 µ" Au	30 µ" Au	100 µ" Sn/Pb	30 µ" Au	100 µ" Sn	Au Flash

SERIES 316 • .100" GRID ELEVATED • SINGLE ROW STRIPS

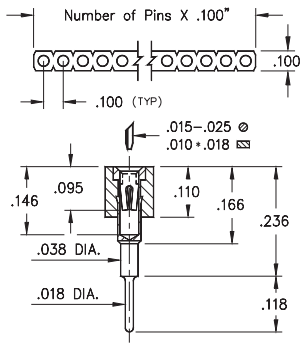

FIG. 1

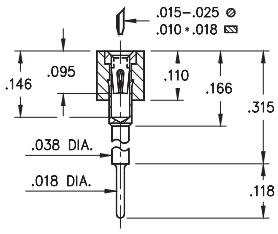

FIG. 2

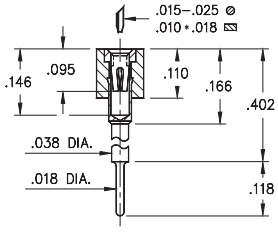

FIG. 3

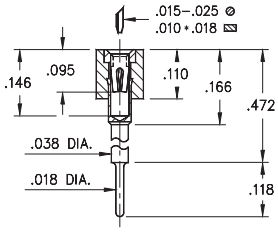

FIG. 4

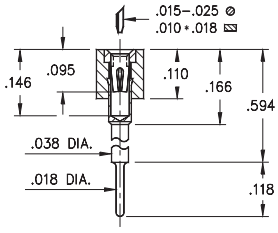

FIG. 5

- Elevated socket strips are available in 5 different heights:

  316...006 uses pin # 0153-1
  316...003 uses pin # 0153-2
  316...007 uses pin # 0153-3
  316...008 uses pin # 0153-4
  316...001 uses pin # 0153-5
  See page 167 for details

- Hi-Rel, 4-finger BeCu #30 contact is rated at 3 amps. See page 253 for details

- Insulators are high temperature thermoplastic, suitable for all soldering operations

ORDERING INFORMATION

FIG. 1	**Series 316...006**	**Standoff Height = .236**
	316-XX-1__-41-006000	
	Specify number of pins ↑ 01-64	
FIG. 2	**Series 316...003**	**Standoff Height = .315**
	316-XX-1__-41-003000	
	Specify number of pins ↑ 01-64	
FIG. 3	**Series 316...007**	**Standoff Height = .402**
	316-XX-1__-41-007000	
	Specify number of pins ↑ 01-64	
FIG. 4	**Series 316...008**	**Standoff Height = .472**
	316-XX-1__-41-008000	
	Specify number of pins ↑ 01-64	
FIG. 5	**Series 316...001**	**Standoff Height = .594**
	316-XX-1__-41-001000	
	Specify number of pins ↑ 01-64	

RoHS-2 2011/65/EU

XX=Plating Code See Below

For Electrical, Mechanical & Enviromental Data, See page 264

SPECIFY PLATING CODE XX=		91	93		41 ◆	43 ◆	47 ◆
Sleeve (Pin)		200 µ" Sn/Pb	200 µ" Sn/Pb		200 µ" Sn	200 µ" Sn	200 µ" Sn
Contact (Clip)		10 µ" Au	30 µ" Au		10 µ" Au	30 µ" Au	Au Flash

SERIES 416 • .100" GRID ELEVATED • DOUBLE ROW STRIPS

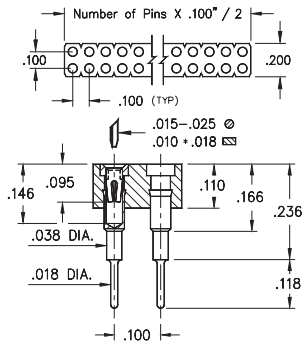

FIG. 1

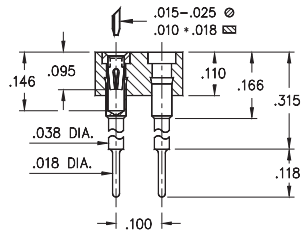

FIG. 2

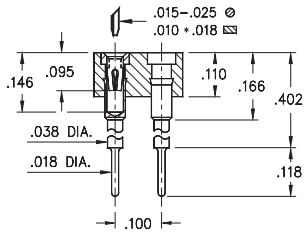

FIG. 3

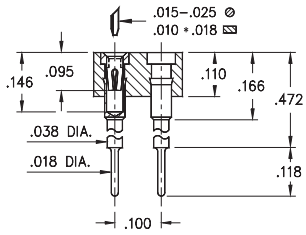

FIG. 4

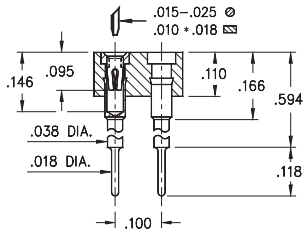

FIG. 5

- Elevated socket strips are available in 5 different heights:

  416...006 uses pin # 0153-1
  416...003 uses pin # 0153-2
  416...007 uses pin # 0153-3
  416...008 uses pin # 0153-4
  416...001 uses pin # 0153-5
  See page 167 for details

- Hi-Rel, 4-finger BeCu #30 contact is rated at 3 amps. See page 253 for details

- Insulators are high temperature thermoplastic, suitable for all soldering operations

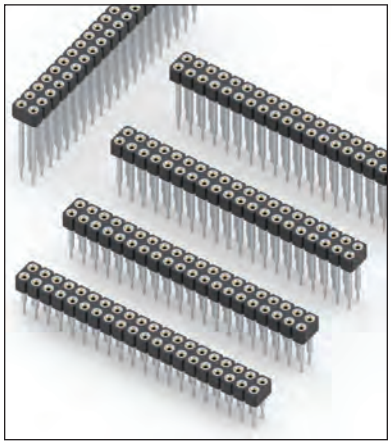

ORDERING INFORMATION

FIG. 1	**Series 416...006**	**Standoff Height = .236**
	416-XX-2__-41-006000	
	Specify number of pins ↑ 04-64	
FIG. 2	**Series 416...003**	**Standoff Height = .315**
	416-XX-2__-41-003000	
	Specify number of pins ↑ 04-64	
FIG. 3	**Series 416...007**	**Standoff Height = .402**
	416-XX-2__-41-007000	
	Specify number of pins ↑ 04-64	
FIG. 4	**Series 416...008**	**Standoff Height = .472**
	416-XX-2__-41-008000	
	Specify number of pins ↑ 04-64	
FIG. 5	**Series 416...001**	**Standoff Height = .594**
	416-XX-2__-41-001000	
	Specify number of pins ↑ 04-64	

RoHS-2 2011/65/EU

XX=Plating Code See Below

For Electrical, Mechanical & Enviromental Data, See page 264

SPECIFY PLATING CODE XX=		91	93		41 ◆	43 ◆	
Sleeve (Pin)		200 µ"Sn/Pb	200 µ"Sn/Pb		200 µ"Sn	200 µ"Sn	
Contact (Clip)		10 µ"Au	30 µ"Au		10 µ"Au	30 µ"Au	

MILL-MAX Mill-Max Mfg. Corp. • 190 Pine Hollow Road, P.O. Box 300, Oyster Bay, NY 11771 • 516-922-6000 • Fax: 516-922-9253 • www.mill-max.com

SERIES 321, 322, 323, 324 • .100" GRID WRAPOST • SINGLE ROW STRIPS

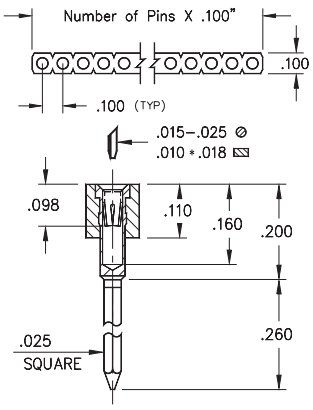

FIG. 1

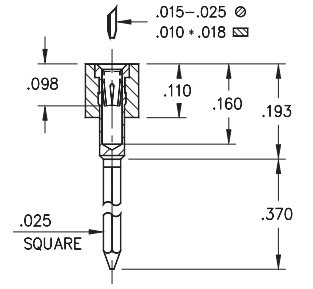

FIG. 2

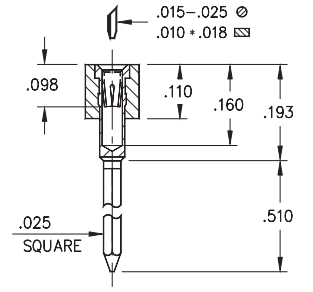

FIG. 3

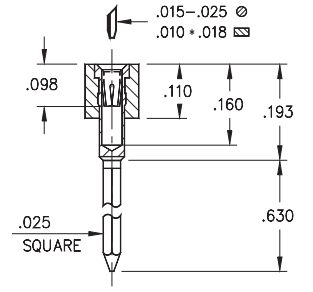

FIG. 4

- Wraposts available in 1 - 4 levels using MM pin numbers:

  1-Level uses pin # 0040-1
  2-Level uses pin # 0089-2
  3-Level uses pin # 0088-3
  4-Level uses pin # 0086-4
  See page 198 for details

- Hi-Rel, 4-finger BeCu #30 contact is rated at 3 amps. See page 253 for details

- Insulators are high temperature thermoplastic, suitable for all soldering operations

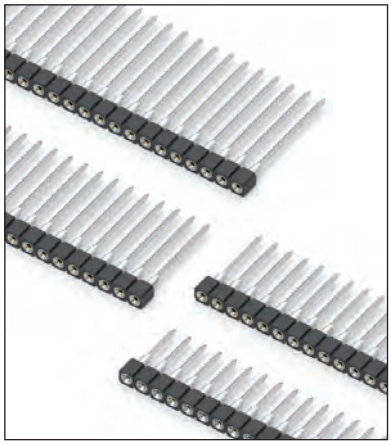

ORDERING INFORMATION

FIG. 1	**Series 321...001**	**1 Level Wrapost**
	321-13-1__-41-001000 **Specify number of pins** ↑ 01-64	
FIG. 2	**Series 322...001**	**2 Level Wrapost**
	322-XX-1__-41-001000 **Specify number of pins** ↑ 01-64	
FIG. 3	**Series 323...001**	**3 Level Wrapost**
	323-XX-1__-41-001000 **Specify number of pins** ↑ 01-64	
FIG. 4	**Series 324...002**	**4 Level Wrapost**
	324-XX-1__-41-002000 **Specify number of pins** ↑ 01-64	

RoHS-2 2011/65/EU

XX=Plating Code See Below

For Electrical, Mechanical & Enviromental Data, See page 264

SPECIFY PLATING CODE XX=	11 ◆	13 ◆	91	93	41 ◆	43 ◆
Sleeve (Pin)	10 µ" Au	10 µ" Au	200 µ" Sn/Pb	200 µ" Sn/Pb	200 µ" Sn	200 µ" Sn
Contact (Clip)	10 µ" Au	30 µ" Au	10 µ" Au	30 µ" Au	10 µ" Au	30 µ" Au

SERIES 421, 422, 423, 424 • .100" GRID WRAPOST • DOUBLE ROW STRIPS

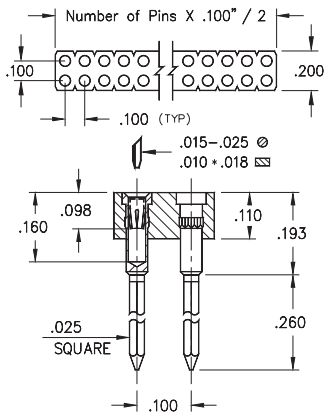

FIG. 1

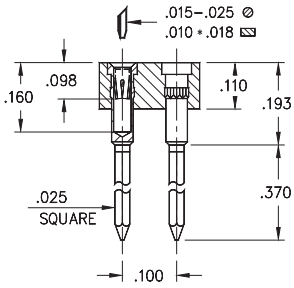

FIG. 2

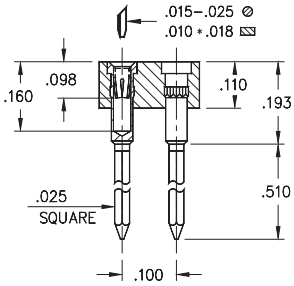

FIG. 3

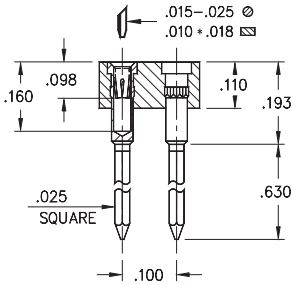

FIG. 4

- Wrapost double row strip sockets are available with 1 - 4 level wraposts:

  1-Level uses pin # 0040-1
  2-Level uses pin # 0089-2
  3-Level uses pin # 0088-3
  4-Level uses pin # 0086-4
  See page 198 for details

- Hi-Rel, 4-finger BeCu #30 contact is rated at 3 amps. See page 253 for details

- Insulators are high temperature thermoplastic, suitable for all soldering operations

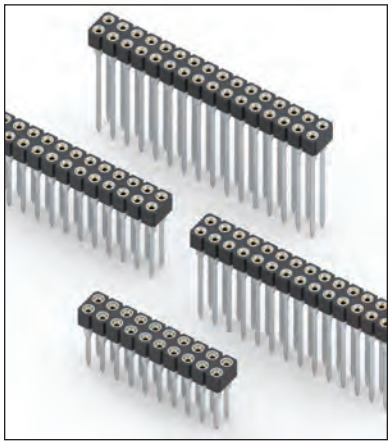

ORDERING INFORMATION

FIG. 1	**Series 421...001**	**1 Level Wrapost**
	421-XX-2_ _-41-001000 **Specify number of pins** ↑ 04-64	
FIG. 2	**Series 422...001**	**2 Level Wrapost**
	422-XX-2_ _-41-001000 **Specify number of pins** ↑ 04-64	
FIG. 3	**Series 423...001**	**3 Level Wrapost**
	423-XX-2_ _-41-001000 **Specify number of pins** ↑ 04-64	
FIG. 4	**Series 424...002**	**4 Level Wrapost**
	424-XX-2_ _-41-002000 **Specify number of pins** ↑ 04-64	

RoHS-2 2011/65/EU

XX=Plating Code See Below

For Electrical, Mechanical & Enviromental Data, See page 264

SPECIFY PLATING CODE XX=	13 ◆		93			43 ◆	
Sleeve (Pin)	10 µ" Au		200 µ" Sn/Pb			200 µ" Sn	
Contact (Clip)	30 µ" Au		30 µ" Au			30 µ" Au	

MILL-MAX Mill-Max Mfg. Corp. • 190 Pine Hollow Road, P.O. Box 300, Oyster Bay, NY 11771 • 516-922-6000 • Fax: 516-922-9253 • www.mill-max.com

SERIES 326 • .100" GRID WRAPOST WITH SOLDER TAIL • SINGLE ROW STRIPS

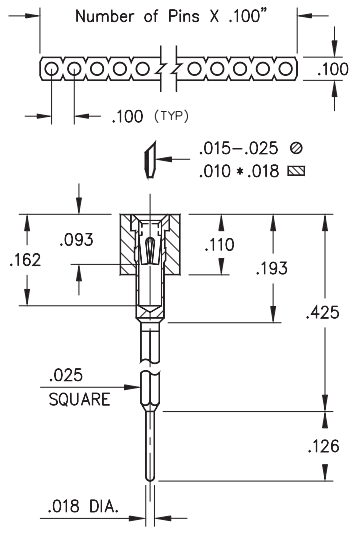

FIG. 1

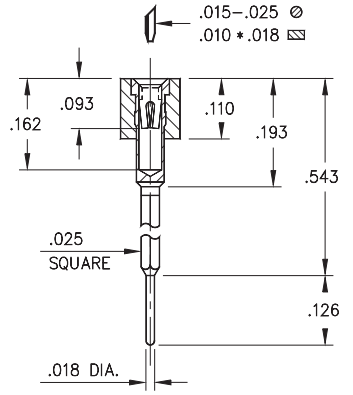

FIG. 2

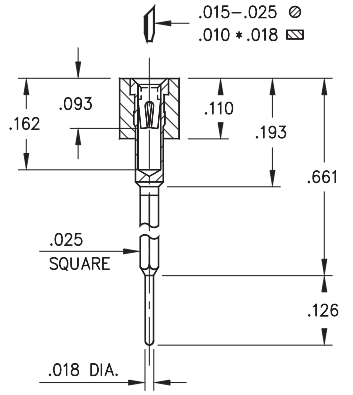

FIG. 3

- Wrapost / Solder Tail combinations are available in 3 lengths using MM pin numbers:

  326...001 uses pin # 2601
  326...002 uses pin # 2602
  326...003 uses pin # 2603
  See page 199 for details

- Hi-Rel, 4-finger BeCu #30 contact is rated at 3 amps. See page 253 for details

- Insulators are high temperature thermoplastic, suitable for all soldering operations

ORDERING INFORMATION

FIG. 1	**Series 326...001**	**1 Level Wrapost**
	326-XX-1__-41-001000 **Specify number of pins** ↑ 01-64	
FIG. 2	**Series 326...002**	**2 Level Wrapost**
	326-XX-1__-41-002000 **Specify number of pins** ↑ 01-64	
FIG. 3	**Series 326...003**	**3 Level Wrapost**
	326-XX-1__-41-003000 **Specify number of pins** ↑ 01-64	

RoHS-2 2011/65/EU

XX=Plating Code See Below

For Electrical, Mechanical & Enviromental Data, See page 264

SPECIFY PLATING CODE XX=		91	93		41 ◆	43 ◆	
Sleeve (Pin)		200 µ" Sn/Pb	200 µ" Sn/Pb		200 µ" Sn	200 µ" Sn	
Contact (Clip)		10 µ" Au	30 µ" Au		10 µ" Au	30 µ" Au	

SERIES 426 • .100" GRID WRAPOST WITH SOLDER TAIL • DOUBLE ROW STRIPS

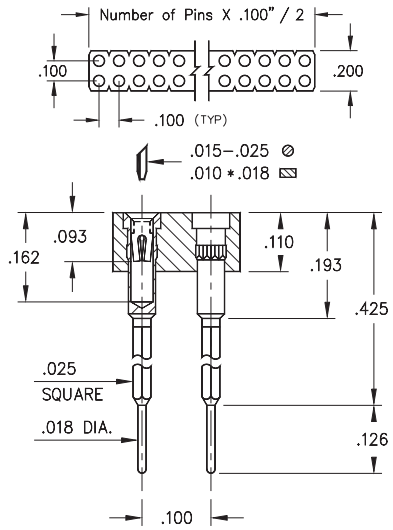

FIG. 1

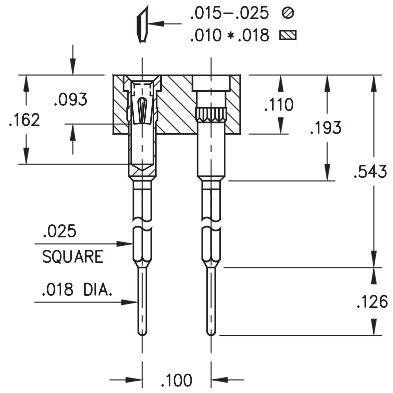

FIG. 2

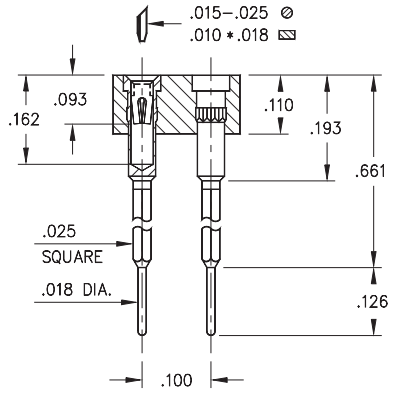

FIG. 3

- Wrapost / Solder Tail combination for interconnect purposes are available in 3 lengths using pin numbers:

  426...001 uses pin # 2601
  426...002 uses pin # 2602
  426...003 uses pin # 2603
  See page 199 for details

- Hi-Rel, 4-finger BeCu #30 contact is rated at 3 amps. See page 253 for details

- Insulators are high temperature thermoplastic, suitable for all soldering operations

ORDERING INFORMATION

FIG. 1	**Series 426...001**	**1 Level Wrapost**
	426-XX-2_ _-41-001000 **Specify number of pins** ↑ 04-64	
FIG. 2	**Series 426...002**	**2 Level Wrapost**
	426-XX-2_ _-41-002000 **Specify number of pins** ↑ 04-64	
FIG. 3	**Series 426...003**	**3 Level Wrapost**
	426-XX-2_ _-41-003000 **Specify number of pins** ↑ 04-64	

RoHS-2 2011/65/EU

XX=Plating Code See Below

For Electrical, Mechanical & Enviromental Data, See page 264

SPECIFY PLATING CODE XX=	13 ◆		93			43 ◆	
Sleeve (Pin)	10 µ" Au		200 µ" Sn/Pb			200 µ" Sn	
Contact (Clip)	30 µ" Au		30 µ" Au			30 µ" Au	

MILL-MAX Mill-Max Mfg. Corp. • 190 Pine Hollow Road, P.O. Box 300, Oyster Bay, NY 11771 • 516-922-6000 • Fax: 516-922-9253 • www.mill-max.com

SERIES 304, 346 • .100" GRID SOLDERLESS PRESS-FIT • SINGLE ROW STRIPS

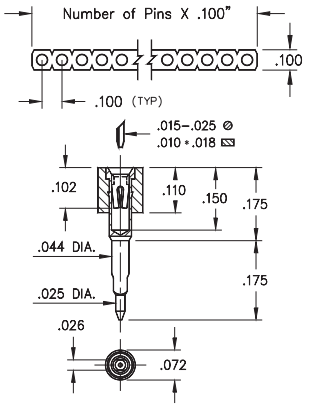

FIG. 1

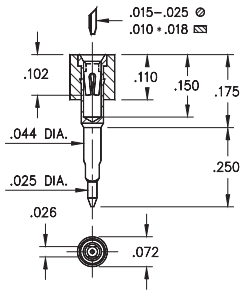

FIG. 2

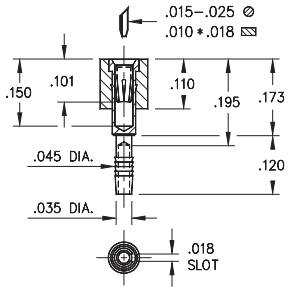

FIG. 3

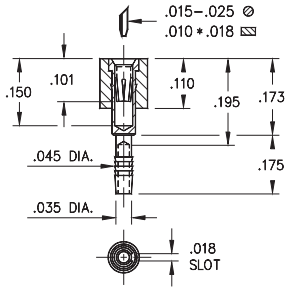

FIG. 4

- Unique compliant tail pins conform to the plated through-hole without stressing the inner layers of a multilayer board
- Recommended plated through-hole for 304 series: .036"-.041" use a 1,1mm drill prior to plating. Using MM #0477 & #0478 pins. See page 162 for details
- For 346 series: .040"±.003" finished plated through-hole. Using MM #4612 & #4613 pins. See page 162 for details. Patent No. 4,799,904
- Hi-Rel, 4-finger BeCu #30 contact is rated at 3 amps. See page 253 for details
- Insulators are high temperature thermoplastic

ORDERING INFORMATION

FIG. 1	**Series 304...770**	**Solderless Press-Fit**
	For .062" Thick Boards	
	304-XX-1__-41-770000 **Specify number of pins** ↑ 01-64	
FIG. 2	**Series 304...780**	**Solderless Press-Fit**
	For .125" Thick Boards	
	304-XX-1__-41-780000 **Specify number of pins** ↑ 01-64	
Mill-Max recommends plating Code 13 for Series 304...770 and 304...780		
FIG. 3	**Series 346...012**	**Compliant Solderless Press-Fit**
	For .060"-.100" Thick Boards	
	346-XX-1__-41-012000 **Specify number of pins** ↑ 01-64	
FIG. 4	**Series 346...013**	**Compliant Solderless Press-Fit**
	For .090"-.130" Thick Boards	
	346-XX-1__-41-013000 **Specify number of pins** ↑ 01-64	

RoHS-2 2011/65/EU

XX=Plating Code See Below

For Electrical, Mechanical & Enviromental Data, See page 264

SPECIFY PLATING CODE XX=	11 ◆	13 ◆	91	93	99	41 ◆	43 ◆	44 ◆
Sleeve (Pin)	10 µ" Au	10 µ" Au	200 µ"Sn/Pb	200 µ"Sn/Pb	200 µ"Sn/Pb	200 µ" Sn	200 µ" Sn	200 µ" Sn
Contact (Clip)	10 µ" Au	30 µ" Au	10 µ" Au	30 µ" Au	100 µ"Sn/Pb	10 µ" Au	30 µ" Au	100 µ" Sn

SERIES 446 • .100" GRID COMPLIANT TAIL • DOUBLE ROW STRIPS

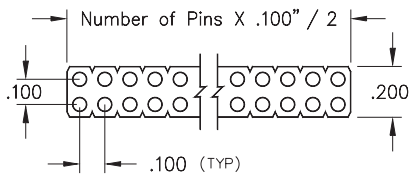

- Compliant tail solderless press-fit: MM #4612 or #4613 pins. Use series 446...012 for .060"-.120" thick boards and series 446...013 for .090"-.130" thick boards. See page 162 for details
- Compliant tail receptacles can be inserted and removed without any degradation of the plated through-hole
- Hi-Rel, 4-finger BeCu #30 contact is rated at 3 amps. See page 253 for details
- Insulators are high temperature thermoplastic

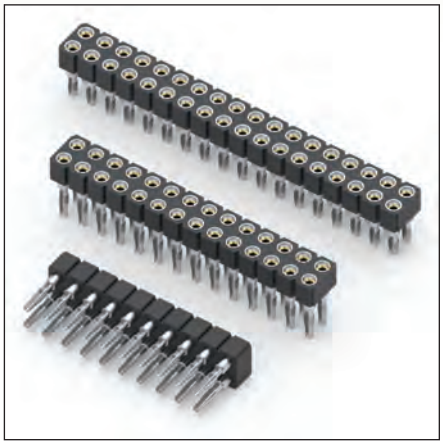

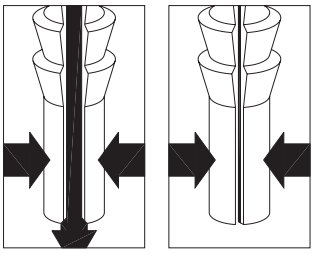

APPLICATION OF COMPLIANT TAIL PINS

Mill-Max's patented* compliant tail features precision-machined pins that are hollow and slotted to conform to a .040" ± .003" diameter PTH. As the pin is inserted, the slot compresses to fit the PTH, thus avoiding damage (see illustration at left). The pin's tail has fine serrations that form a perfect "gas tight" connection that doesn't require soldering. And since the pin doesn't damage the hole, compliant tail sockets and connectors can be easily replaced.
*Patent No. 4,799,904.

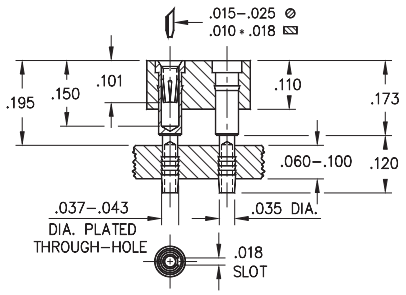

FIG. 1

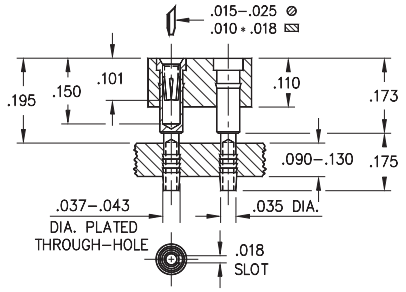

FIG. 2

ORDERING INFORMATION

FIG. 1	**Series 446...012**	**Compliant Tail Socket**
	446-XX-2__-41-012000	
	Specify number of pins	04-64
FIG. 2	**Series 446...013**	**Compliant Tail Socket**
	446-XX-2__-41-013000	
	Specify number of pins	04-64

RoHS-2 2011/65/EU

XX=Plating Code See Below

For Electrical, Mechanical & Enviromental Data, See page 264

SPECIFY PLATING CODE XX=	13 ◆		93	99		43 ◆	44 ◆
Sleeve (Pin)	10 µ" Au		200 µ" Sn/Pb	200 µ" Sn/Pb		200 µ" Sn	200 µ" Sn
Contact (Clip)	30 µ" Au		30 µ" Au	100 µ" Sn/Pb		30 µ" Au	100 µ" Sn

MILL-MAX Mill-Max Mfg. Corp. • 190 Pine Hollow Road, P.O. Box 300, Oyster Bay, NY 11771 • 516-922-6000 • Fax: 516-922-9253 • www.mill-max.com

SERIES 712 • .100" GRID CARRIER WITH SOLDER TAIL • SINGLE AND DOUBLE ROW STRIPS

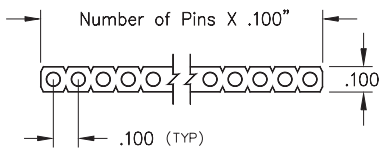

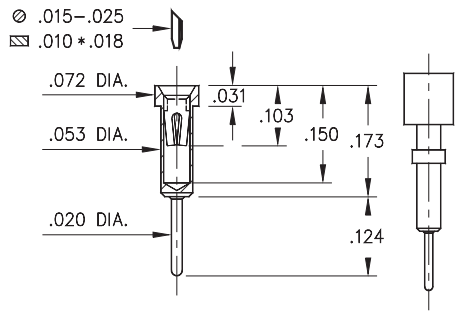

FIG. 1

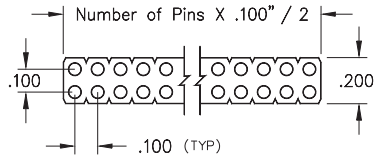

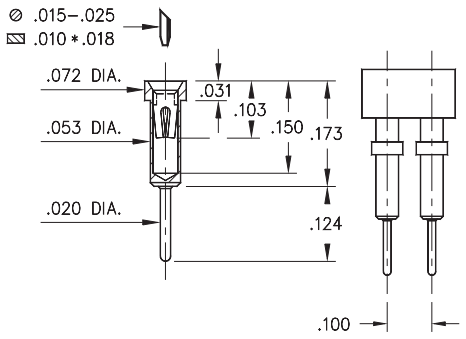

FIG. 2

- Standard solder tail receptacles can be mounted as a low profile receptacle or by the solder tail for use in smaller diameter holes
- Series 712 use MM #0255 pins. See page 165 for details
- Hi-Rel, 4-finger BeCu #30 contact is rated at 3 amps. See page 253 for details
- Insulators are high temperature thermoplastic, suitable for all soldering operations

ORDERING INFORMATION

FIG. 1	**Single Row (.028" or .055" min. mounting holes)**
	712-XX-1__-41-001000 **Specify number of pins** ↑ 01-64
FIG. 2	**Double Row (.028" or .055" min. mounting holes)**
	712-XX-2__-41-001000 **Specify number of pins** ↑ 04-64

RoHS-2 2011/65/EU

XX=Plating Code See Below

For Electrical, Mechanical & Enviromental Data, See page 264

SPECIFY PLATING CODE XX=	11 ◆	13 ◆	91	93	41 ◆	43 ◆	
Sleeve (Pin)	10 µ" Au	10 µ" Au	200 µ" Sn/Pb	200 µ" Sn/Pb	200 µ" Sn	200 µ" Sn	
Contact (Clip)	10 µ" Au	30 µ" Au	10 µ" Au	30 µ" Au	10 µ" Au	30 µ" Au	

SERIES 714...00X • .100" GRID LOW PROFILE CARRIERS • SINGLE AND DOUBLE ROW STRIPS

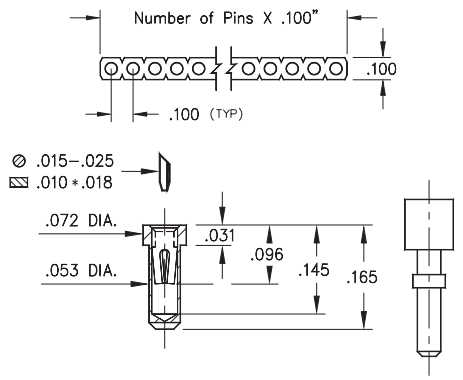

FIG. 1

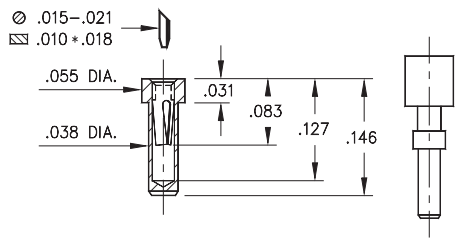

FIG. 2

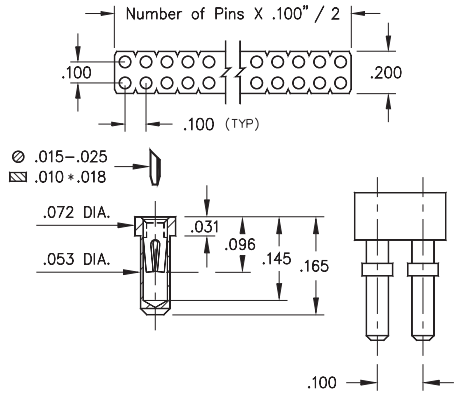

FIG. 3

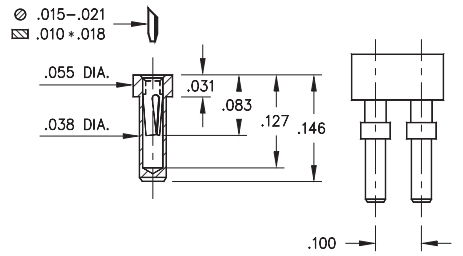

FIG. 4

- Low profile receptacles sit .031" above the board
- Series 714 use MM #1401 and MM #1407 pin receptacles. See pages 157 and 170 for details
- Hi-Rel, 4-finger BeCu #30 contact is used in the #1401 receptacle and a BeCu #11 contact is used in the #1407. Both contacts are rated at 3 amps. See pages 251 and 253 for details
- Insulators are high temperature thermoplastic, suitable for all soldering operations

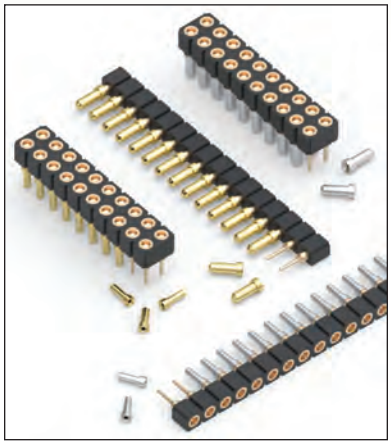

ORDERING INFORMATION

FIG. 1	**Single Row (.055" min. mounting hole)** 714-XX-1__-41-001000 **Specify number of pins** ↑ 01-64
FIG. 2	**Single Row (.039" min. mounting hole)** 714-XX-1__-31-007000 **Specify number of pins** ↑ 01-64
FIG. 3	**Double Row (.055" min. mounting hole)** 714-XX-2__-41-001000 **Specify number of pins** ↑ 04-64
FIG. 4	**Double Row (.039" min. mounting hole)** 714-XX-2__-31-007000 **Specify number of pins** ↑ 04-64

RoHS-2 2011/65/EU

XX=Plating Code See Below

For Electrical, Mechanical & Enviromental Data, See page 264

SPECIFY PLATING CODE XX=		91	93		41 ◆	43 ◆	
Sleeve (Pin)		200 µ"Sn/Pb	200 µ"Sn/Pb		200 µ"Sn	200 µ"Sn	
Contact (Clip)		10 µ"Au	30 µ"Au		10 µ"Au	30 µ"Au	

MILL-MAX® Mill-Max Mfg. Corp. • 190 Pine Hollow Road, P.O. Box 300, Oyster Bay, NY 11771 • 516-922-6000 • Fax: 516-922-9253 • www.mill-max.com

SERIES 714...01X • .100" GRID ULTRA LOW PROFILE CARRIERS • SINGLE AND DOUBLE ROW STRIPS

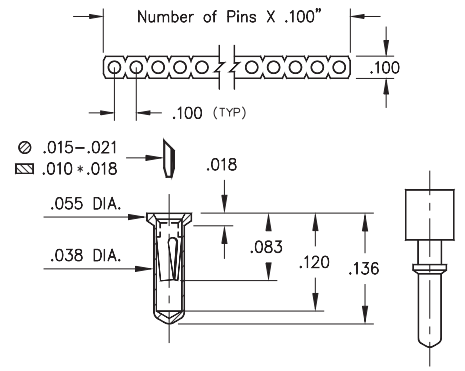

FIG. 1

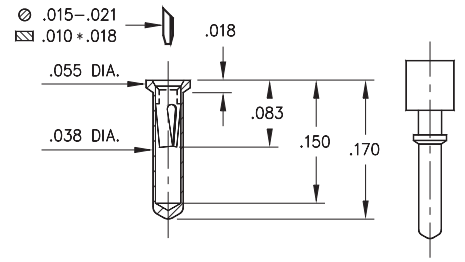

FIG. 2

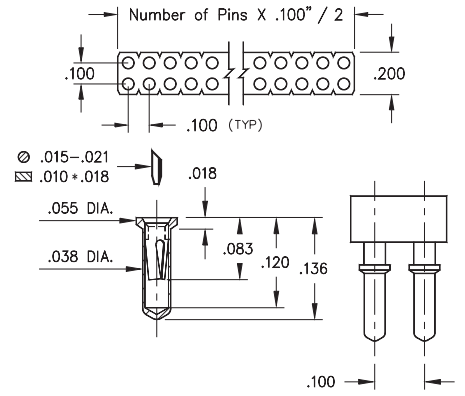

FIG. 3

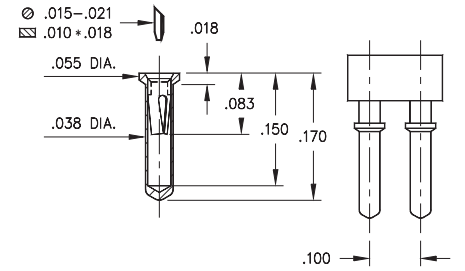

FIG. 4

- Ultra low profile receptacles sit .018" above the board
- Series 714 use MM #0552-1 and MM #0552-2 pin receptacles. See page 158 for details
- Hi-Rel, 3-finger BeCu #11 contact is rated at 3 amps. See page 251 for details
- Insulators are high temperature thermoplastic, suitable for all soldering operations

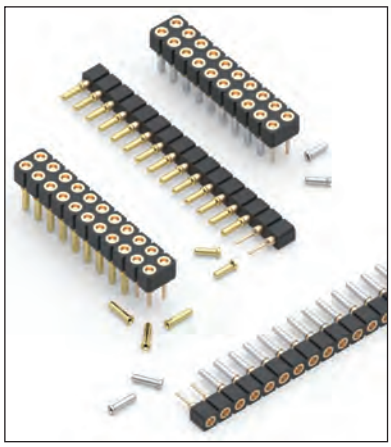

ORDERING INFORMATION

FIG. 1	**Single Row (.039" min. mounting hole)** 714-XX-1__-31-012000 **Specify number of pins** ← 01-64
FIG. 2	**Single Row (.039" min. mounting hole)** 714-XX-1__-31-018000 **Specify number of pins** ← 01-64
FIG. 3	**Double Row (.039" min. mounting hole)** 714-XX-2__-31-012000 **Specify number of pins** ← 04-64
FIG. 4	**Double Row (.039" min. mounting hole)** 714-XX-2__-31-018000 **Specify number of pins** ← 04-64

RoHS-2 2011/65/EU

XX=Plating Code See Below

For Electrical, Mechanical & Enviromental Data, See page 264

SPECIFY PLATING CODE XX=		91	93		41 ◆	43 ◆	
Sleeve (Pin)		200 µ" Sn/Pb	200 µ" Sn/Pb		200 µ" Sn	200 µ" Sn	
Contact (Clip)		10 µ" Au	30 µ" Au		10 µ" Au	30 µ" Au	

SERIES 335, 364, 435, 464 • .100" GRID (.018" DIA. PINS), LOW PROFILE • SINGLE AND DOUBLE ROW STRIPS

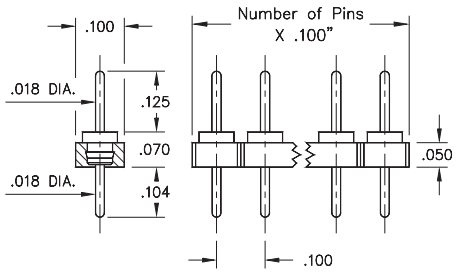

FIG. 1

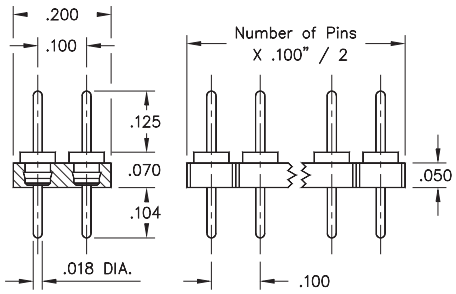

FIG. 2

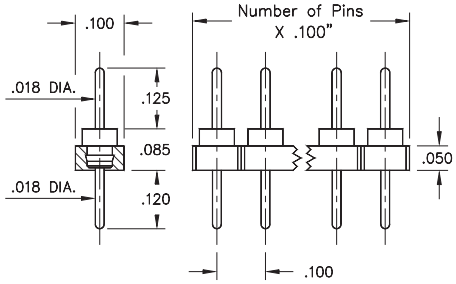

FIG. 3

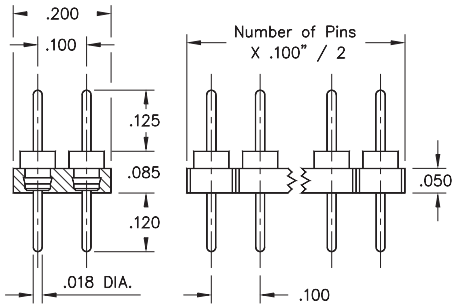

FIG. 4

- Series 335 and 435 single and double row PCB interconnects offer a .070" profile, the lowest available
- Series 364 and 464 single and double row PCB interconnects offer .085" profile above board
- Series 335 and 435 use MM #3516 pins. See page 212 for details
- Series 364 and 464 use MM #6458 pins. See page 213 for details
- Insulators are high temperature thermoplastic, suitable for all soldering operations

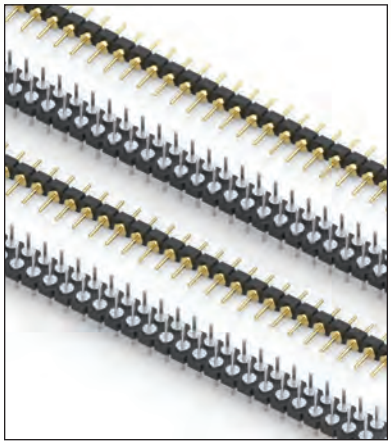

ORDERING INFORMATION

FIG. 1	**Series 335...160**	**Single Row .070" Profile Pin Header**
	335-XX-1__-00-160000	
	Specify number of pins	01-32
FIG. 2	**Series 435...160**	**Double Row .070" Profile Pin Header**
	435-XX-2__-00-160000	
	Specify number of pins	04-72
FIG. 3	**Series 364...580**	**Single Row .085" Profile Pin Header**
	364-10-1__-00-580000	
	Specify number of pins	01-32
FIG. 4	**Series 464...580**	**Double Row .085" Profile Pin Header**
	464-10-2__-00-580000	
	Specify number of pins	04-72

RoHS-2 2011/65/EU

XX=Plating Code See Below

For Electrical, Mechanical & Enviromental Data, See page 264

SPECIFY PLATING CODE XX=	10 ◆	90	40 ◆	
Pin Plating	10 µ" Au	200 µ" Sn/Pb	200 µ" Sn	

MILL-MAX Mill-Max Mfg. Corp. • 190 Pine Hollow Road, P.O. Box 300, Oyster Bay, NY 11771 • 516-922-6000 • Fax: 516-922-9253 • www.mill-max.com

SERIES 351 • .100" GRID INTERCONNECT HEADERS • SINGLE ROW STRIPS

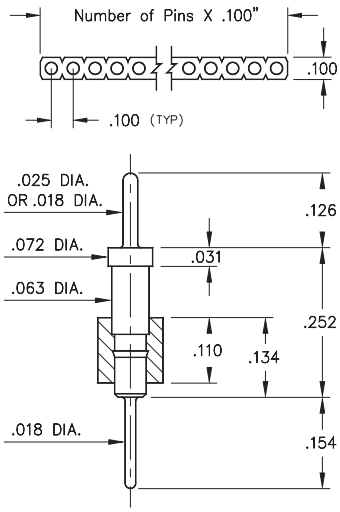

FIG. 1

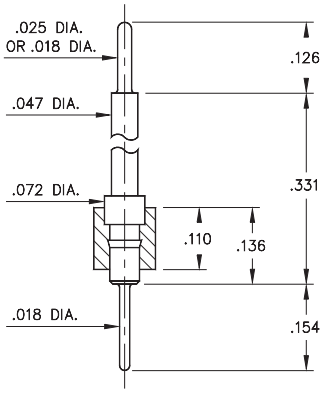

FIG. 2

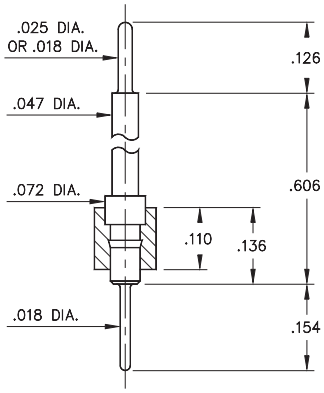

FIG. 3

- Series 351 interconnect header strips come in three lengths with .018" dia. pluggable solder tails at one end and .025" dia. pins at the other. Please see series:
  351...003 uses pin #5503
  351...004 uses pin #5504
  351...005 uses pin #5505
- .018" pluggable solder tails are available at both ends. Please see series:
  351...009 uses pin #5509
  351...010 uses pin #5510
  351...011 uses pin #5511
  See pages 212 and 214 for details
- Insulators are high temperature thermoplastic, suitable for all soldering operations

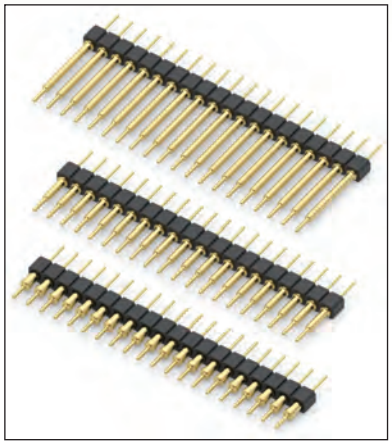

ORDERING INFORMATION

FIG. 1	**Series 351...003**	**.018" / .025" Dia. Solder Tails**
	351-10-1__-00-003000 **Specify number of pins** ↑ 01-64	
	Series 351...009	**.018" / .018" Dia. Solder Tails**
	351-10-1__-00-009000 **Specify number of pins** ↑ 01-64	
FIG. 2	**Series 351...004**	**.018" / .025" Dia. Solder Tails**
	351-10-1__-00-004000 **Specify number of pins** ↑ 01-64	
	Series 351...010	**.018" / .018" Dia. Solder Tails**
	351-10-1__-00-010000 **Specify number of pins** ↑ 01-64	
FIG. 3	**Series 351...005**	**.018" / .025" Dia. Solder Tails**
	351-10-1__-00-005000 **Specify number of pins** ↑ 01-64	
	Series 351...011	**.018" / .018" Dia. Solder Tails**
	351-10-1__-00-011000 **Specify number of pins** ↑ 01-64	

RoHS-2 2011/65/EU

XX=Plating Code See Below

For Electrical, Mechanical & Enviromental Data, See page 264

SPECIFY PLATING CODE XX=	10 ◆			
Pin Plating	10 µ" Au			

SERIES 451 • .100" GRID INTERCONNECT HEADERS • DOUBLE ROW STRIPS

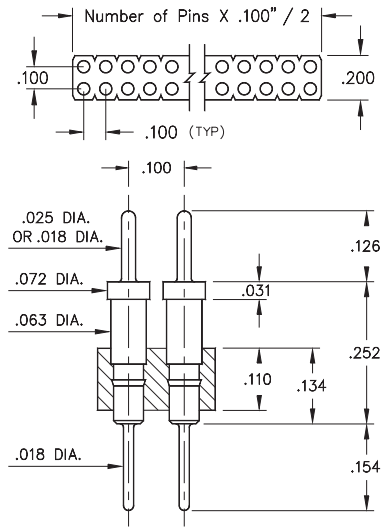

FIG. 1

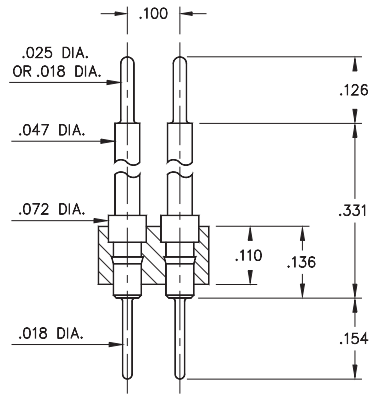

FIG. 2

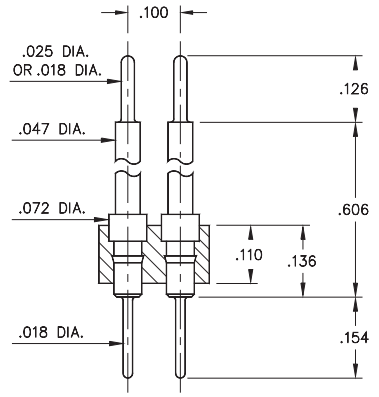

FIG. 3

- Series 451 interconnect header strips come in three lengths with .018" dia. pluggable solder tails at one end and .025" dia. pins at the other. Please see series:
  451...003 uses pin #5503
  451...004 uses pin #5504
  451...005 uses pin #5505
- .018" pluggable solder tails are available at both ends. Please see series:
  451...009 uses pin #5509
  451...010 uses pin #5510
  451...011 uses pin #5511
  See pages 212 and 214 for details
- Insulators are high temperature thermoplastic, suitable for all soldering operations

ORDERING INFORMATION

FIG. 1	**Series 451...003**	**.018" / .025" Dia. Solder Tails**
	451-10-2_ _-00-003000 **Specify number of pins** ↑ 04-64	
	Series 451...009	**.018" / .018" Dia. Solder Tails**
	451-10-2_ _-00-009000 **Specify number of pins** ↑ 04-64	
FIG. 2	**Series 451...004**	**.018" / .025" Dia. Solder Tails**
	451-10-2_ _-00-004000 **Specify number of pins** ↑ 04-64	
	Series 451...010	**.018" / .018" Dia. Solder Tails**
	451-10-2_ _-00-010000 **Specify number of pins** ↑ 04-64	
FIG. 3	**Series 451...005**	**.018" / .025" Dia. Solder Tails**
	451-10-2_ _-00-005000 **Specify number of pins** ↑ 04-64	
	Series 451...011	**.018" / .018" Dia. Solder Tails**
	451-10-2_ _-00-011000 **Specify number of pins** ↑ 04-64	

RoHS-2 2011/65/EU

XX=Plating Code See Below

For Electrical, Mechanical & Enviromental Data, See page 264

SPECIFY PLATING CODE XX=	10 ◆			
Pin Plating	10 µ" Au			

MILL-MAX® Mill-Max Mfg. Corp. • 190 Pine Hollow Road, P.O. Box 300, Oyster Bay, NY 11771 • 516-922-6000 • Fax: 516-922-9253 • www.mill-max.com

SERIES 334 • .100" GRID INTERCONNECT HEADERS • SINGLE ROW STRIPS

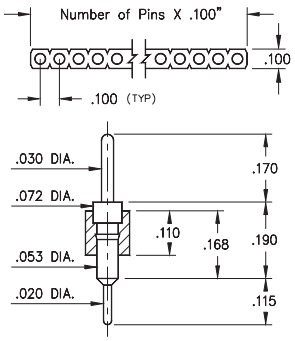

FIG. 1

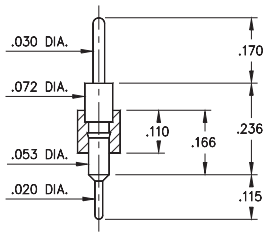

FIG. 2

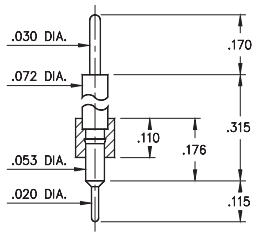

FIG. 3

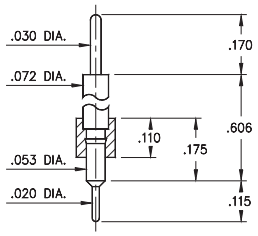

FIG. 4

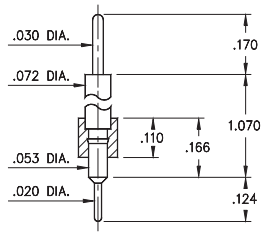

FIG. 5

- Series 334 interconnect header strips are available in 5 lengths:

  334...020 uses pin #3402 (L = .190")
  334...010 uses pin #3401 (L = .236")
  334...050 uses pin #3405 (L = .315")
  334...000 uses pin #3400 (L = .606")
  334...100 uses pin #3410 (L = 1.070")
  See page 215 for details

- Strips come with .020" pluggable soldertails at one end and .030" tails at the other

- Insulators are high temperature thermoplastic, suitable for all soldering operations

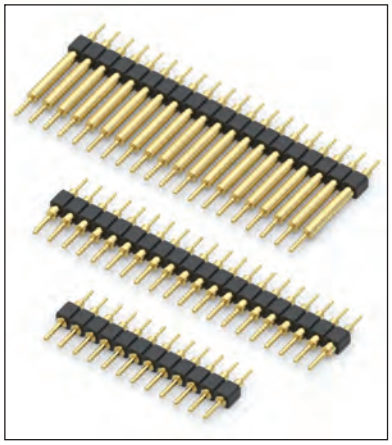

ORDERING INFORMATION

FIG. 1	**Series 334...020**	**.020" / .030" Dia. Solder Tails**
	334-XX-1__-00-020000	
	Specify number of pins	01-64
FIG. 2	**Series 334...010**	**.020" / .030" Dia. Solder Tails**
	334-XX-1__-00-010000	
	Specify number of pins	01-64
FIG. 3	**Series 334...050**	**.020" / .030" Dia. Solder Tails**
	334-XX-1__-00-050000	
	Specify number of pins	01-64
FIG. 4	**Series 334...000**	**.020" / .030" Dia. Solder Tails**
	334-XX-1__-00-000000	
	Specify number of pins	01-64
FIG. 5	**Series 334...100**	**.020" / .030" Dia. Solder Tails**
	334-XX-1__-00-100000	
	Specify number of pins	01-64

RoHS-2 2011/65/EU

XX=Plating Code See Below

For Electrical, Mechanical & Enviromental Data, See page 264

SPECIFY PLATING CODE XX=	10 ◆	90	40 ◆	
Pin Plating	10 µ" Au	200 µ" Sn/Pb	200 µ" Sn	

SERIES 342 • .100" GRID BOARD STACKING HEADERS • SINGLE ROW STRIPS

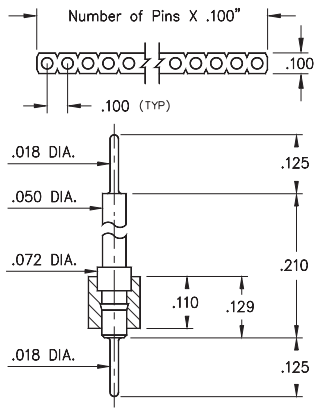

FIG. 1

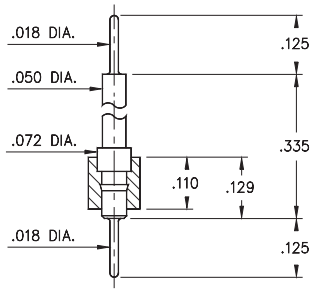

FIG. 2

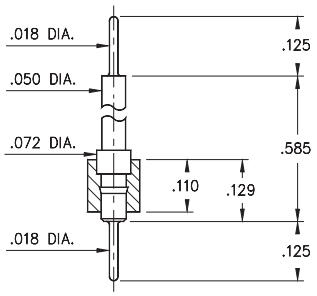

FIG. 3

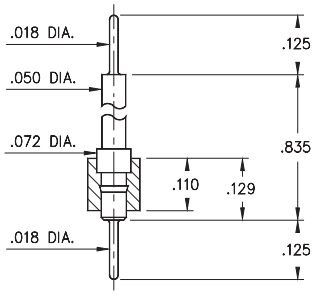

FIG. 4

- Series 342 interconnect header strips come in four heights with .018" dia. pluggable solder tails at both ends

  342...591 uses pin #4259-1 (L = .210")
  342...592 uses pin #4259-2 (L = .335")
  342...593 uses pin #4259-3 (L = .585")
  342...594 uses pin #4259-4 (L = .835")
  See page 212 for details

- Insulators are high temperature thermoplastic, suitable for all soldering operations

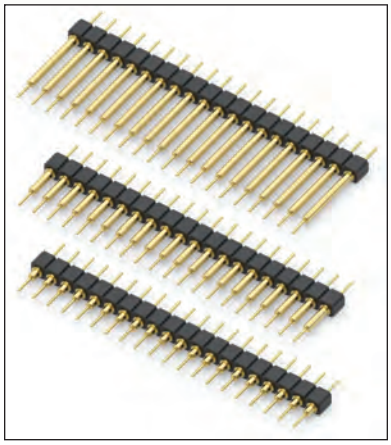

ORDERING INFORMATION

FIG. 1	**Series 342...591**	**.018" / .018" Dia. Solder Tails**
	342-XX-1__-00-591000	
	Specify number of pins	01-64
FIG. 2	**Series 342...592**	**.018" / .018" Dia. Solder Tails**
	342-XX-1__-00-592000	
	Specify number of pins	01-64
FIG. 3	**Series 342...593**	**.018" / .018" Dia. Solder Tails**
	342-XX-1__-00-593000	
	Specify number of pins	01-64
FIG. 4	**Series 342...594**	**.018" / .018" Dia. Solder Tails**
	342-XX-1__-00-594000	
	Specify number of pins	01-64

RoHS-2 2011/65/EU

XX=Plating Code See Below

For Electrical, Mechanical & Enviromental Data, See page 264

SPECIFY PLATING CODE XX=	10 ◆	90	40 ◆	
Pin Plating	10 µ" Au	200 µ" Sn/Pb	200 µ" Sn	

MILL-MAX Mill-Max Mfg. Corp. • 190 Pine Hollow Road, P.O. Box 300, Oyster Bay, NY 11771 • 516-922-6000 • Fax: 516-922-9253 • www.mill-max.com

SERIES 442 • .100" GRID BOARD STACKING HEADERS • DOUBLE ROW STRIPS

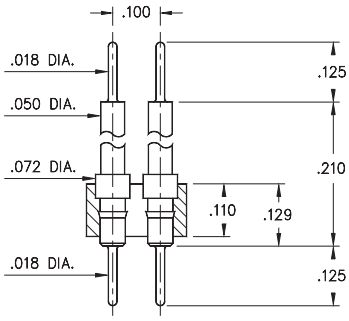

FIG. 1

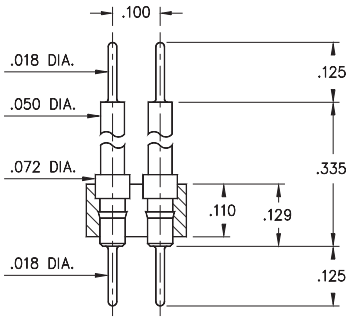

FIG. 2

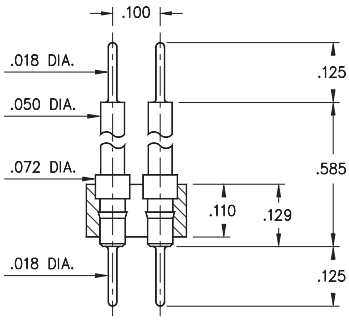

FIG. 3

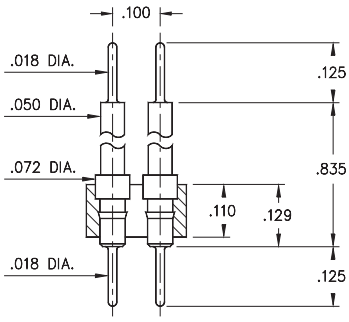

FIG. 4

- Series 442 interconnect header strips come in four heights with .018" dia. pluggable solder tails at both ends

  442...591 uses pin #4259-1 (L = .210")
  442...592 uses pin #4259-2 (L = .335")
  442...593 uses pin #4259-3 (L = .585")
  442...594 uses pin #4259-4 (L = .835")
  See page 212 for details

- Insulators are high temperature thermoplastic, suitable for all soldering operations

ORDERING INFORMATION

FIG. 1	**Series 442...591**	**.018" / .018" Dia. Solder Tails**
	442-XX-2_ _-00-591000	
	Specify number of pins ↑ 04-64	
FIG. 2	**Series 442...592**	**.018" / .018" Dia. Solder Tails**
	442-XX-2_ _-00-592000	
	Specify number of pins ↑ 04-64	
FIG. 3	**Series 442...593**	**.018" / .018" Dia. Solder Tails**
	442-XX-2_ _-00-593000	
	Specify number of pins ↑ 04-64	
FIG. 4	**Series 442...594**	**.018" / .018" Dia. Solder Tails**
	442-XX-2_ _-00-594000	
	Specify number of pins ↑ 04-64	

RoHS-2 2011/65/EU

XX=Plating Code See Below

For Electrical, Mechanical & Enviromental Data, See page 264

SPECIFY PLATING CODE XX=	10 ◆	90	40 ◆	
Pin Plating 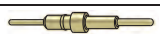	10 µ" Au	200 µ" Sn/Pb	200 µ" Sn	

SERIES 350, 360, 370, 380 • .100" GRID SOLDER TAIL • SINGLE ROW STRIPS

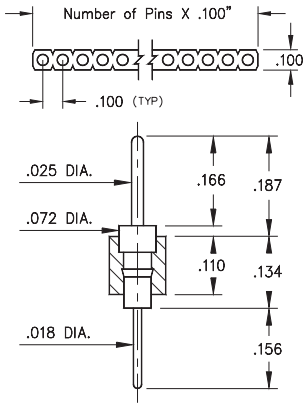

FIG. 1

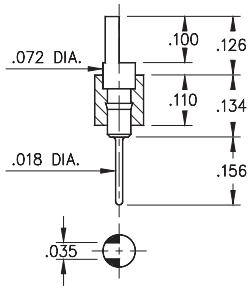

FIG. 2

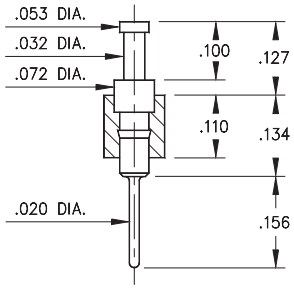

FIG. 3

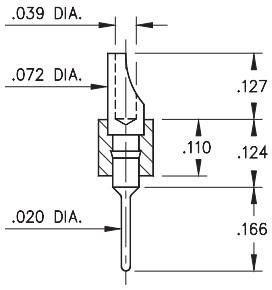

FIG. 4

- Series 350, 360, 370 & 380 single row header strips come in various styles (pin, slotted, head, turret and solder cup) with pluggable solder tails

  350...001 uses pin #0290
  360...001 uses pin #0282
  370...001 uses pin #0700
  380...001 uses pin #8000
  See pages 215 and 216 for details

- Insulators are high temperature thermoplastic, suitable for all soldering operations

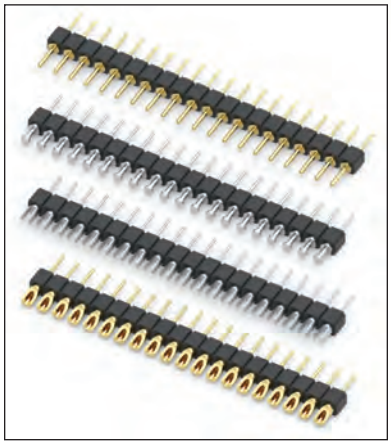

ORDERING INFORMATION

FIG. 1	**Series 350...001**	**.025" / .018" Dia. Solder Tails**
	350-XX-1__-00-001000	
	Specify number of pins ↑ 01-64	
FIG. 2	**Series 360...001**	**Slotted Head / Solder Tail**
	360-XX-1__-00-001000	
	Specify number of pins ↑ 01-64	
FIG. 3	**Series 370...001**	**Turret / Solder Tail**
	370-XX-1__-00-001000	
	Specify number of pins ↑ 01-64	
FIG. 4	**Series 380...001**	**Solder Cup / Solder Tail**
	380-XX-1__-00-001000	
	Specify number of pins ↑ 01-64	

RoHS-2 2011/65/EU

XX=Plating Code See Below

For Electrical, Mechanical & Enviromental Data, See page 264

SPECIFY PLATING CODE XX=	10 ◆	90	40 ◆	
Pin Plating	10 µ" Au	200 µ" Sn/Pb	200 µ" Sn	

MILL-MAX® Mill-Max Mfg. Corp. • 190 Pine Hollow Road, P.O. Box 300, Oyster Bay, NY 11771 • 516-922-6000 • Fax: 516-922-9253 • www.mill-max.com

SERIES 450, 460, 470, 480 • .100" GRID SOLDER TAIL • DOUBLE ROW STRIPS

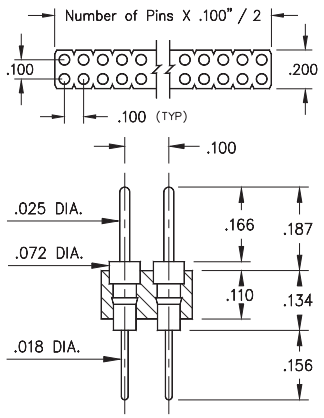

FIG. 1

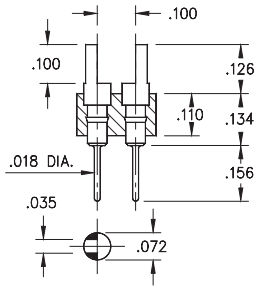

FIG. 2

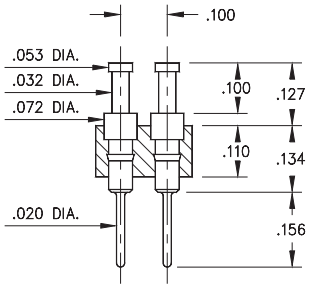

FIG. 3

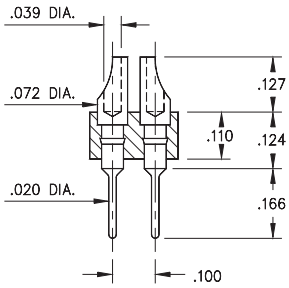

FIG. 4

- Series 450, 460, 470 & 480 double row header strips come in various styles (pin, slotted, head, turret and solder cup) with pluggable solder tails

  450...001 uses pin #0290
  460...001 uses pin #0282
  470...001 uses pin #0700
  480...001 uses pin #8000
  See pages 215 and 216 for details

- Insulators are high temperature thermoplastic, suitable for all soldering operations

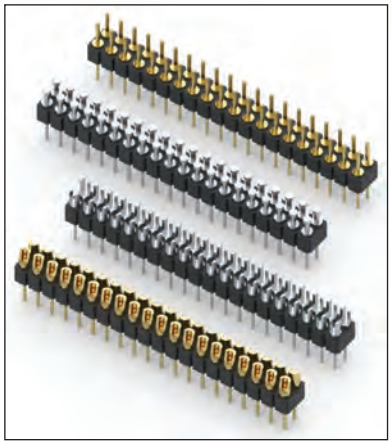

ORDERING INFORMATION

FIG. 1	**Series 450...001**	**.025" / .018" Dia. Solder Tails**
	450-XX-2_ _-00-001000	
	Specify number of pins	04-64
FIG. 2	**Series 460...001**	**Slotted Head / Solder Tail**
	460-10-2_ _-00-001000	
	Specify number of pins	02-64
FIG. 3	**Series 470...001**	**Turret / Solder Tail**
	470-XX-2_ _-00-001000	
	Specify number of pins	04-64
FIG. 4	**Series 480...001**	**Solder Cup / Solder Tail**
	480-10-2_ _-00-001000	
	Specify number of pins	02-64

RoHS-2 2011/65/EU

XX=Plating Code See Below

For Electrical, Mechanical & Enviromental Data, See page 264

SPECIFY PLATING CODE XX=	10 ◆	90	40 ◆	
Pin Plating	10 µ" Au	200 µ" Sn/Pb	200 µ" Sn	

SERIES 353, 362, 363, 373, 382, 383 • .100" GRID WRAPOST • SINGLE ROW STRIPS

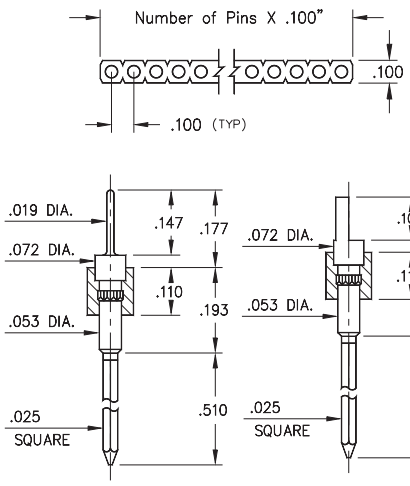

FIG. 1

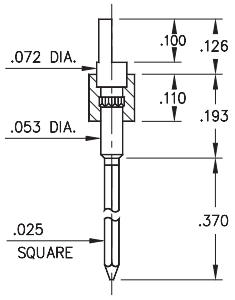

FIG. 2

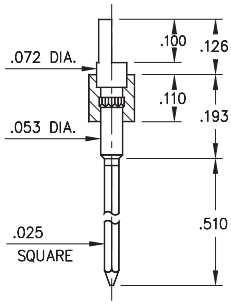

FIG. 3

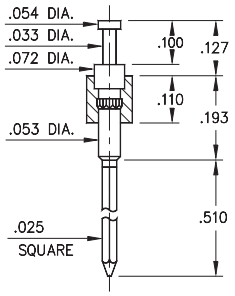

FIG. 4

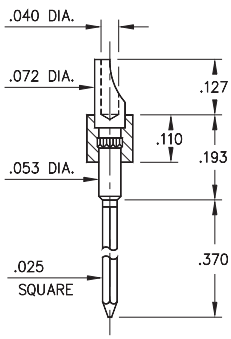

FIG. 5

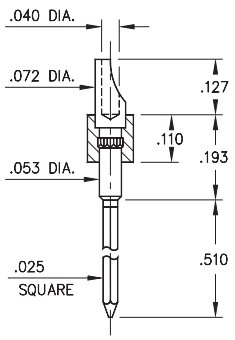

FIG. 6

- Series 353, 362, 363, 373, 382 and 383 single row header strips come in various styles (pin, slotted head, turret and solder cup) with wrapost tails

  353...001 uses pin #5301
  362...001 uses pin #1106-2
  363...001 uses pin #1106-3
  373...001 uses pin #0730-3
  382...001 uses pin #8301-2
  383...001 uses pin #8301-3
  See pages 227 and 228 for details

- Insulators are high temperature thermoplastic, suitable for all soldering operations

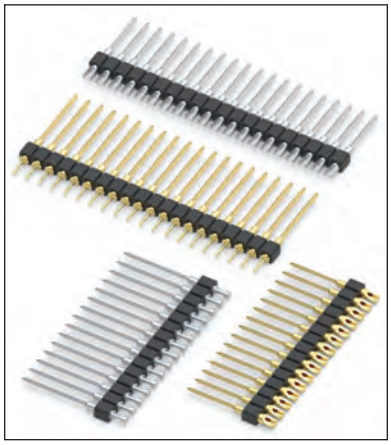

ORDERING INFORMATION

FIG. 1	**Series 353...001**	**Pin / 3 Level Wrapost**
	353-XX-1__-00-001000	
	Specify number of pins ↑ 01-64	
FIG. 2	**Series 362...001**	**Slotted Head / 2 Level Wrapost**
	362-XX-1__-00-001000	
	Specify number of pins ↑ 01-64	
FIG. 3	**Series 363...001**	**Slotted Head / 3 Level Wrapost**
	363-XX-1__-00-001000	
	Specify number of pins ↑ 01-64	
FIG. 4	**Series 373...001**	**Turret / 3 Level Wrapost**
	373-XX-1__-00-001000	
	Specify number of pins ↑ 01-64	
FIG. 5	**Series 382...001**	**Solder Cup / 2 Level Wrapost**
	382-XX-1__-00-001000	
	Specify number of pins ↑ 01-64	
FIG. 6	**Series 383...001**	**Solder Cup / 3 Level Wrapost**
	383-XX-1__-00-001000	
	Specify number of pins ↑ 01-64	

RoHS-2 2011/65/EU

XX=Plating Code See Below

For Electrical, Mechanical & Enviromental Data, See page 264

SPECIFY PLATING CODE XX=	10 ◆	90	40 ◆	
Pin Plating	10 µ" Au	200 µ" Sn/Pb	200 µ" Sn	

MILL-MAX® Mill-Max Mfg. Corp. • 190 Pine Hollow Road, P.O. Box 300, Oyster Bay, NY 11771 • 516-922-6000 • Fax: 516-922-9253 • www.mill-max.com

SERIES 453, 463, 473, 483 • .100" GRID WRAPOST • DOUBLE ROW STRIPS

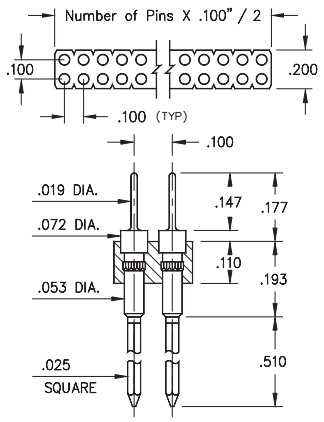

FIG. 1

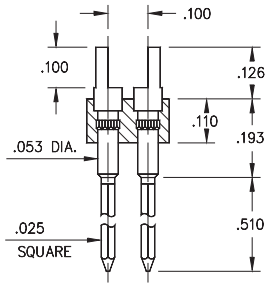

FIG. 2

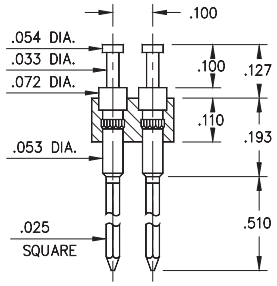

FIG. 3

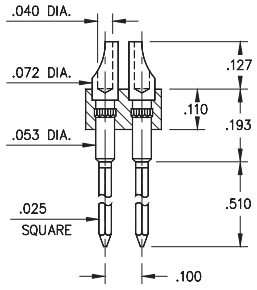

FIG. 4

- Series 453, 463, 473, and 483 double row header strips come in various styles (pin, slotted head, turret and solder cup) with wrapost tails

  453...001 uses pin #5301
  463...001 uses pin #1106-3
  473...001 uses pin #0730-3
  483...001 uses pin #8301-3
  See pages 227 and 228 for details

- Insulators are high temperature thermoplastic, suitable for all soldering operations

ORDERING INFORMATION

FIG. 1	**Series 453...001**	**Pin / 3 Level Wrapost**
	453-10-2_ _-00-001000	
	Specify number of pins ↑	04-64
FIG. 2	**Series 463...001**	**Slotted Head / 3 Level Wrapost**
	463-XX-2_ _-00-001000	
	Specify number of pins ↑	02-64
FIG. 3	**Series 473...001**	**Turret / 3 Level Wrapost**
	473-XX-2_ _-00-001000	
	Specify number of pins ↑	04-64
FIG. 4	**Series 483...001**	**Solder Cup / 3 Level Wrapost**
	483-XX-2_ _-00-001000	
	Specify number of pins ↑	02-64

RoHS-2 2011/65/EU

XX=Plating Code See Below

For Electrical, Mechanical & Enviromental Data, See page 264

SPECIFY PLATING CODE XX=	10 ◆	90	40 ◆	
Pin Plating 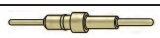	10 µ" Au	200 µ" Sn/Pb	200 µ" Sn	

SERIES 302, 330, 370, 380
DISCRETE INSULATED PINS

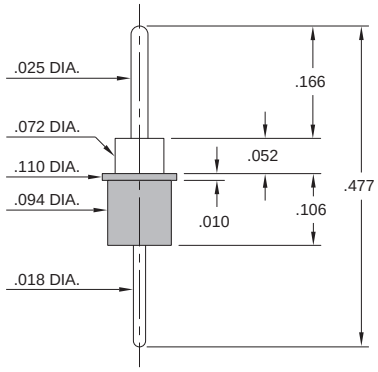

FIG. 1

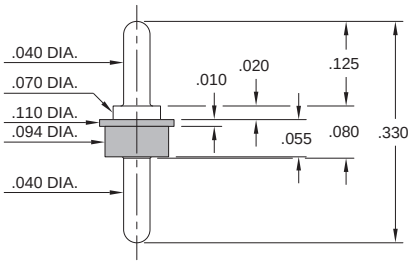

FIG. 2

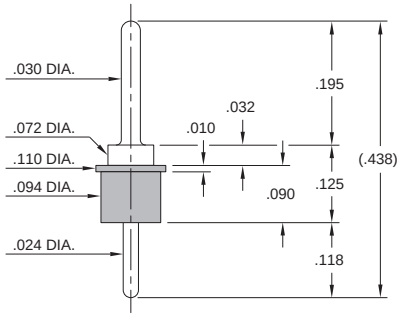

FIG. 3

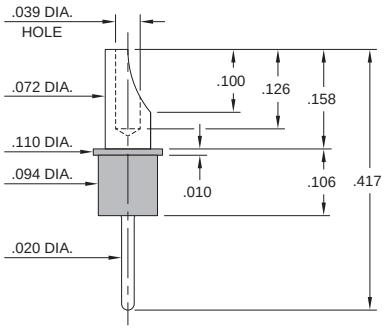

FIG. 4

- Series 302, 330, 370 and 380 insulated parts are offered in double tail & solder cup styles

  302-10-001-00-900800 uses pin #0290-0
  330-10-001-00-770800 uses pin #3077-0
  370-10-001-00-070800 uses pin #7007-0
  380-10-001-00-000800 uses pin #8000-0
  See pages 162, 165, 215 and 216 for details

- Insulated terminals are used to electrically isolate single pin interconnects in an assembly. The plastic sleeve provides insulation of the terminal from nearby conductive components or for applications such as mounting through a metal panel or other non-insulated housing. The sleeve also facilities the handling of small, individual terminals and can provide mechanical support for pins mounted on or through printed circuit boards

- Insulators are high temperature thermoplastic, suitable for most soldering operations

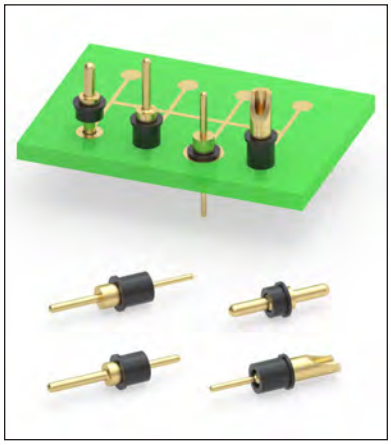

ORDERING INFORMATION

FIG. 1	**Series 302...900800**	**Double tail Pin with Sleeve**
	302-10-001-00-900800	
FIG. 2	**Series 330...770800**	**Double tail Pin with Sleeve**
	330-10-001-00-770800	
FIG. 3	**Series 370...070800**	**Double tail Pin with Sleeve**
	370-10-001-00-070800	
FIG. 4	**Series 380...000800**	**Soldercup pin with Sleeve**
	380-10-001-00-000800	

SPECIFICATIONS:

Insulating Sleeve tolerance: ± .003

Packaging: **Bulk**

RoHS - 2
2011/65/EU

XX=Plating Code
See Below

For Electrical, Mechanical & Enviromental Data, See page 264

SPECIFY PLATING CODE XX=	10 ◆			
Pin Plating 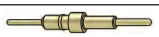	10 µ" Au			

MILL-MAX® Mill-Max Mfg. Corp. • 190 Pine Hollow Road, P.O. Box 300, Oyster Bay, NY 11771 • 516-922-6000 • Fax: 516-922-9253 • www.mill-max.com

SERIES 305, 310
DISCRETE INSULATED RECEPTACLES

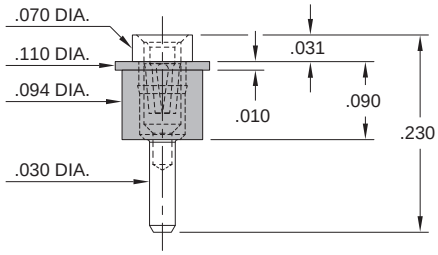

FIG. 1

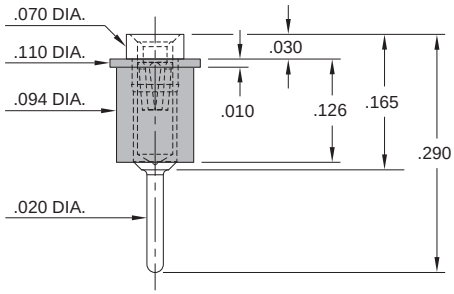

FIG. 2

- Series 305 and 310 single position insulated parts are offered in standard and low profile styles

  305-43-001-30-010800 uses pin #0501-0
  310-43-001-30-010800 uses pin #1001-0
  See pages 162 and 165 for details
- Insulated terminals are used to electrically isolate single pin interconnects in an assembly. The plastic sleeve provides insulation of the terminal from nearby conductive components or for applications such as mounting through a metal panel or other non-insulated housing. The sleeve also facilities the handling of small, individual terminals and can provide mechanical support for pins mounted on or through printed circuit boards
- Insulators are high temperature thermoplastic, suitable for most soldering operations

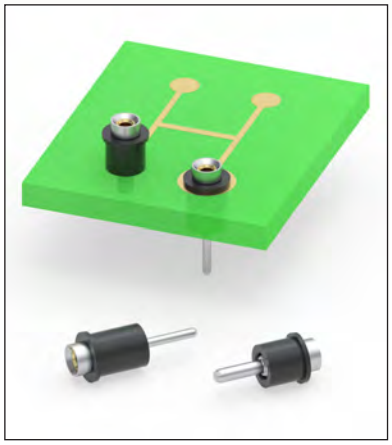

ORDERING INFORMATION

FIG. 1	**Series 305...010800**	**Receptacle with Sleeve**
	305-43-001-30-010800	
FIG. 2	**Series 310...010800**	**Receptacle with Sleeve**
	310-43-001-30-010800	

SPECIFICATIONS:

Insulating Sleeve tolerance: ± .003
Packaging: Bulk

RoHS-2 2011/65/EU

XX=Plating Code See Below

For Electrical, Mechanical & Enviromental Data, See page 264

SPECIFY PLATING CODE XX=			43 ◆				
Sleeve (Pin)			200 µ" Sn				
Contact (Clip)			30 µ" Au				

SERIES 835 • .100" GRID HORIZONTAL SURFACE MOUNT SOCKET WITH REMOVEABLE INSULATOR • SINGLE ROW STRIPS

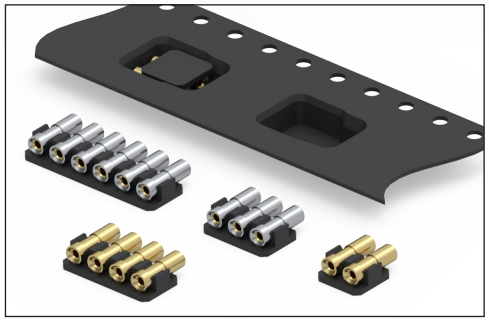

- Horizontal surface mount sockets with removeable insulator for minimal profile connections
- Ideal for daisy chaining of P.C.B.'s when mated with horizontal surface mount header series 328-XX-1XX-40-020001
- Series 835 single row .100" grid sockets uses Hi-Rel, 4-finger BeCu #30 contact rated at 3amps. See page 162.1 for details
- High temperature thermoplastic insulators are suitable for surface mount soldering processes
- The 835 series are packaged on tape & reel - 16, 24, 32 or 44 mm wide x 16 mm pitch, making them simple to integrate into existing pick & place equipment and assembly processes. The tape packaging is per EIA-481-D

Series 835 Single Row

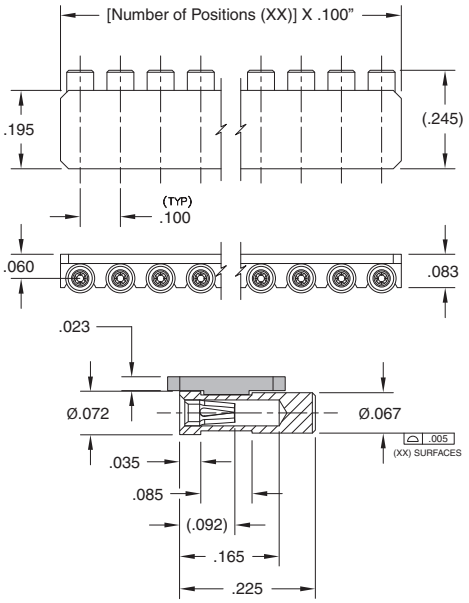

Series 835 (Tape Pocket Details)

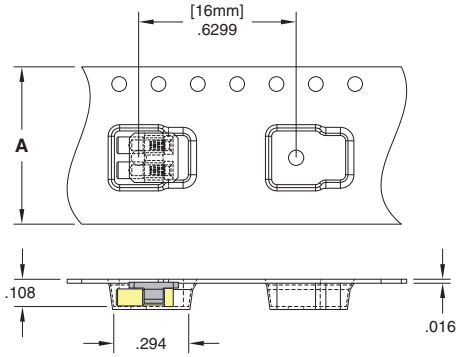

ORDERING INFORMATION

Series 835 (Tape & Reel Packaged)

835-XX-0XX-40-030001

Specify number of contacts 02-10

Number of Contacts	Tape Width Size (A)	Quantity per Reel
2	16mm	1,450
3	16mm	1,450
4	24mm	1,450
5	24mm	1,450
6	24mm	1,450
7	32mm	1,450
8	32mm	1,450
9	44mm	1,450
10	44mm	1,450

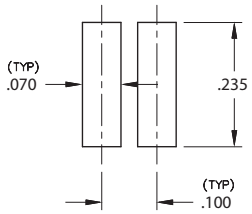

Suggested P.C.B. Footprint

RoHS-2 2011/65/EU

XX=Plating Code See Below

For Electrical, Mechanical & Enviromental Data, See page 264

SPECIFY PLATING CODE XX=	13 ◆				43 ◆		
Sleeve (Pin)	10 µ" Au				200µ" Sn		
Contact (Clip)	30 µ" Au				30 µ" Au		

MILL-MAX® Mill-Max Mfg. Corp. • 190 Pine Hollow Road, P.O. Box 300, Oyster Bay, NY 11771 • 516-922-6000 • Fax: 516-922-9253 • www.mill-max.com

SERIES 328 • .100" GRID HORIZONTAL SURFACE MOUNT HEADER WITH REMOVEABLE INSULATOR • SINGLE ROW STRIPS

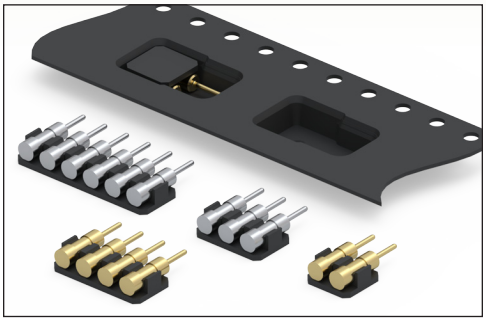

- Horizontal surface mount headers with removeable insulator for minimal profile connections
- Ideal for daisy chaining of P.C.B.'s when mated with horizontal surface mount socket series 835-XX-0XX-40-030001
- Series 328 single row .100" grid headers use MM #2820 pins. See page 207 for details
- High temperature thermoplastic insulators are suitable for surface mount soldering processes
- The 328 series are packaged on tape & reel - 16, 24, 32 or 44 mm wide x 16 mm pitch, making them simple to integrate into existing pick & place equipment and assembly processes. The tape packaging is per EIA-481-D

Series 328 Single Row

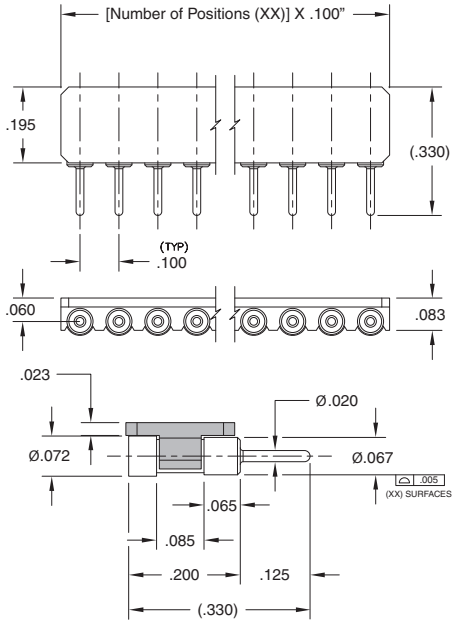

Series 328 (Tape Pocket Details)

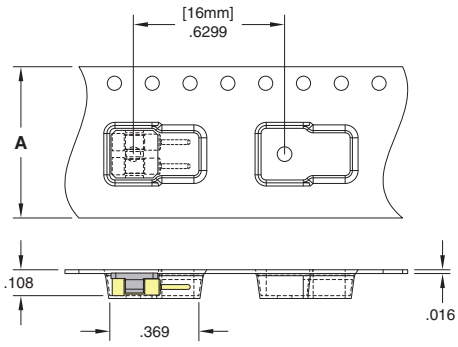

ORDERING INFORMATION

Series 328 (Tape & Reel Packaged)

328-XX-1XX-40-020001

Specify number of contacts 02-10

Number of Contacts	Tape Width Size (A)	Quantity per Reel
2	16mm	1,450
3	16mm	1,450
4	24mm	1,450
5	24mm	1,450
6	24mm	1,450
7	32mm	1,450
8	32mm	1,450
9	44mm	1,450
10	44mm	1,450

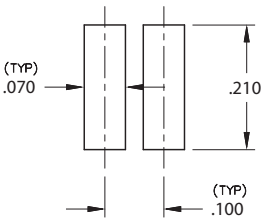

Suggested P.C.B. Footprint

RoHS-2 2011/65/EU

XX=Plating Code See Below

For Electrical, Mechanical & Enviromental Data, See page 264

SPECIFY PLATING CODE XX=	10 ◆		40 ◆	
Pin Plating	10 µ" Au		200 µ" Sn	

Mouser Electronics

Authorized Distributor

Click to View Pricing, Inventory, Delivery & Lifecycle Information:

Mill-Max:

380-40-156-10-003000 380-10-120-10-003000 380-10-118-10-003000 380-10-161-10-003000 380-40-117-10-003000 380-40-103-00-002000 380-40-120-10-003000 380-10-157-10-003000 380-40-102-10-003000 380-40-143-10-003000 380-10-137-10-003000 380-10-124-10-003000 380-40-107-00-002000 380-40-137-10-003000 380-10-132-10-003000 380-40-134-10-003000 380-40-135-10-003000 380-40-152-10-003000 380-10-147-10-003000 380-40-119-10-003000 380-10-152-10-003000 380-10-136-10-003000 380-40-151-10-003000 380-40-118-10-003000 380-40-138-10-003000 380-10-155-10-003000 380-10-135-10-003000 380-10-158-10-003000 380-10-133-10-003000 380-40-132-10-003000 380-40-102-00-002000 380-10-119-10-003000 380-10-160-10-003000 380-40-126-10-003000 380-10-144-10-003000 380-10-121-10-003000 380-40-123-10-003000 380-40-114-10-003000 380-40-109-10-003000 380-40-112-10-003000 380-40-146-10-003000 380-10-153-10-003000 380-10-113-10-003000 380-40-106-10-003000 380-10-164-10-003000 380-40-110-00-002000 380-40-129-10-003000 380-40-149-10-003000 380-40-160-10-003000 380-10-141-10-003000 380-10-145-10-003000 380-40-104-00-002000 380-10-115-10-003000 380-10-128-10-003000 380-10-151-10-003000 380-40-127-10-003000 380-10-122-10-003000 380-10-125-10-003000 380-10-107-10-003000 380-10-162-10-003000 380-40-105-10-003000 380-10-123-10-003000 380-40-125-10-003000 380-40-162-10-003000 380-10-134-10-003000 380-40-130-10-003000 380-40-106-00-002000 380-40-159-10-003000 380-10-140-10-003000 380-40-110-10-003000 380-40-150-10-003000 380-10-114-10-003000 380-40-139-10-003000 380-40-105-00-002000 380-40-107-10-003000 380-10-112-10-003000 380-40-153-10-003000 380-40-133-10-003000 380-40-144-10-003000 380-40-128-10-003000 380-40-142-10-003000 380-40-157-10-003000 380-40-141-10-003000 380-10-126-10-003000 380-40-101-10-003000 380-40-161-10-003000 380-10-142-10-003000 380-40-121-10-003000 380-40-164-00-002000 380-10-148-10-003000 380-10-154-10-003000 380-40-113-10-003000 380-40-147-10-003000 380-10-111-10-003000 380-10-131-10-003000 380-40-109-00-002000 380-10-146-10-003000 380-40-116-10-003000 380-10-149-10-003000 380-40-122-10-003000