DRAWING FOR REFERENCE: This is subject to change without notice
08/11/2012

HRS DRAWING FOR REFERENCE

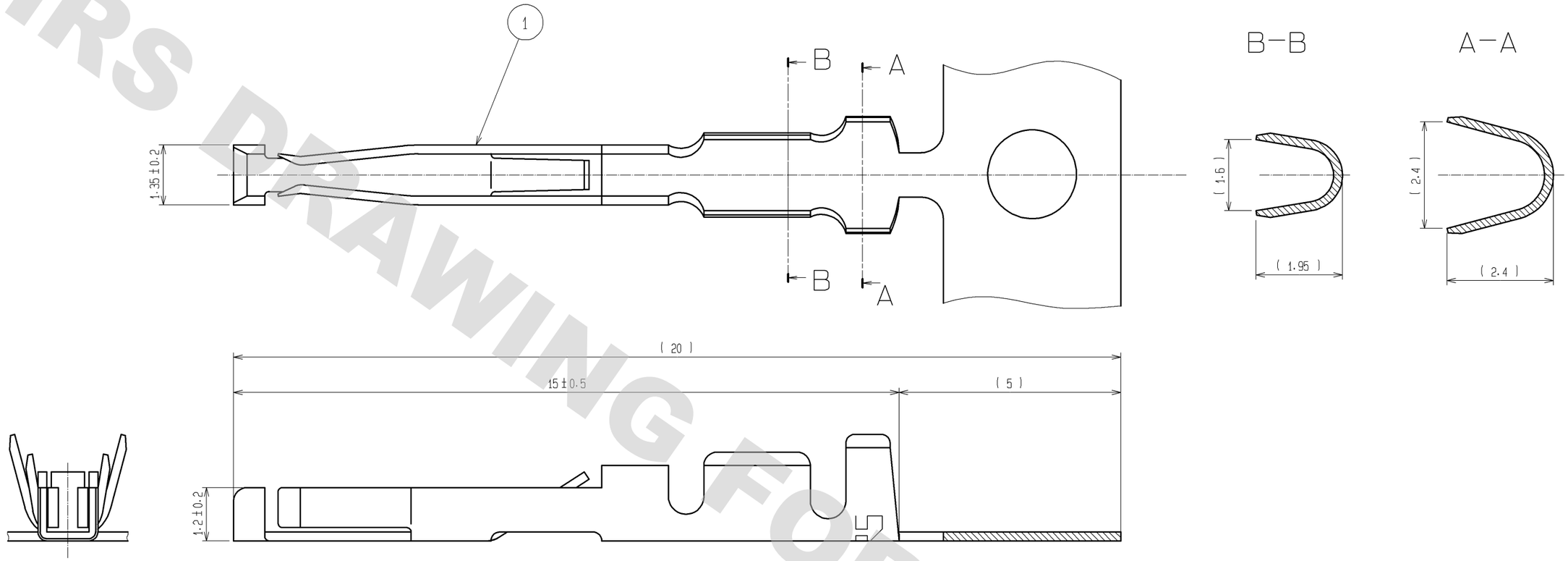

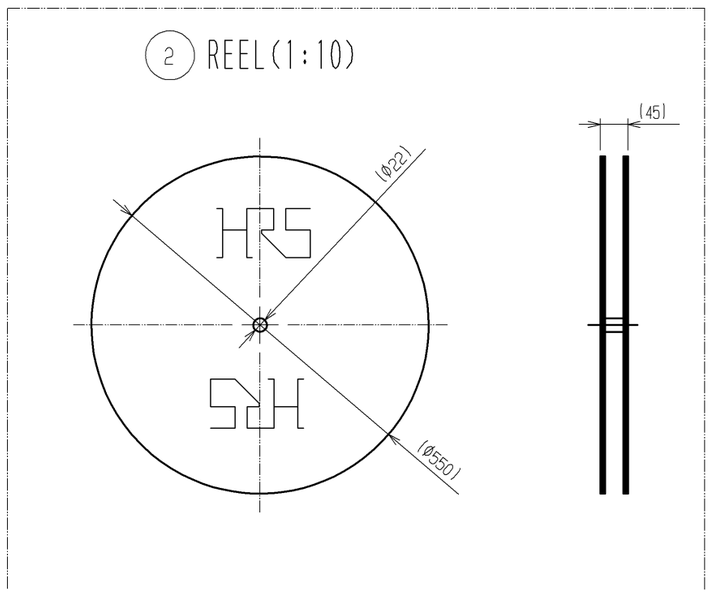

NOTES
1 THIS PRODUCT IS APPLY TO THE WIRE φ20 TO φ24(WIRE JACKET DIAMETER φ1.7 MAX.)
2 PER REEL:10000 CONTACTS.
3 CONTACT AREA : GOLD PLATING 0.2μm min.
TERMINAL AREA : NICKEL PLATING 2μm min.
UNDER PLATING : NICKEL 2μm min.

NO.	MATERIAL	FINISH , REMARKS	NO.	MATERIAL	FINISH , REMARKS
1	PHOSPHOR BRONZE	3	2	CARTON	(TERMINAL WINDING REEL)

UNITS mm	SCALE 10:1	COUNT	DESCRIPTION OF REVISIONS	DESIGNED	CHECKED	DATE

HIROSE ELECTRIC CO., LTD.

APPROVED	: MO. SATOH	07. 08. 27	DRAWING NO.	EDC3-114757-00
CHECED	: YH. YAMADA	07. 08. 27	PART NO.	HR34B-SC-211
DESIGNED	: TY. SUZUKI	07. 08. 27		
DRAWN	: MK. SATO	07. 08. 03	CODE NO.	CL134-0019-4-00

1/1

FORM NO. 229-1