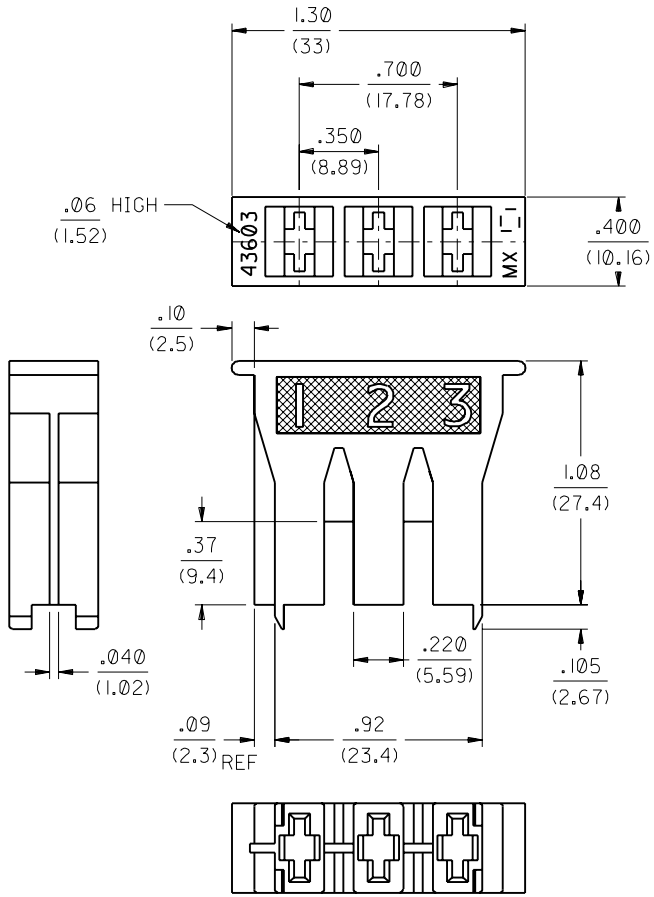

NOTES:

1. THIS HOUSING IS FOR USE WITH THE 41422-5001 TERMINAL WHICH CRIMPS TO 14 TO 18 AWG WIRE WITH .031/(.79) THICK INSULATION.
2. MATERIAL: NYLON, 94V-2, COLOR: NATURAL (WHITE)

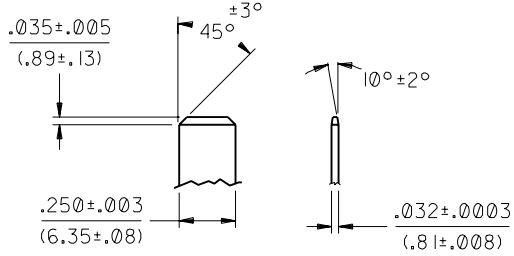

SPADE DETAIL

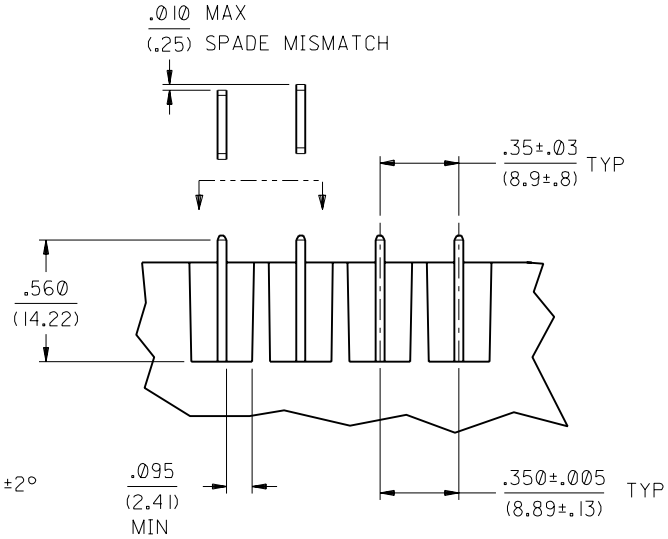

TERMINAL / HOUSING ASSEMBLY RELATIONSHIP

LTR.	REVISIONS	LTR.	REVISIONS
		B	50011 WAS 3A2N5B1 ECR U60516 10-31-95 SAMIEC
		A	RELEASED ECR U60373 9-21-95 SAMIEC
C	REVISED ECN U60856 1-25-96 RHR	1	X RELEASED ECR U60140 8-16-95 samiec

DIMENSIONS SHOWN (METRIC) INCH

UNLESS OTHERWISE SPECIFIED TOLERANCES: ANGULAR ± 5°

	INCH	METRIC
3 PLACE	± .010	---
2 PLACE	± .014	± 0.25
1 PLACE	---	± 0.35

DRAFT WHERE APPLICABLE MUST REMAIN WITHIN DIMENSIONS

DRWG. BY KSAMIEC | CHK'D. BY BRUSHTON | APP'D. BY BLENZ | SCALE 2 : 1

▽ = 0 ▼ = 0 REVISE ONLY ON CAD SYSTEM

TITLE HOUSING, RECEPTACLE 3 CIRCUIT

MOLEX INCORPORATED LISLE, ILL. 60532 U.S.A.

SHEET NO. 1 OF 1 | DATE 95/08/04

PATENTED ITEM NO. 43603-0003 | DRWG. NO. SD-43603-0003

FILE NAME S43603X1 DGN

THIS DRAWING CONTAINS INFORMATION THAT IS PROPRIETARY TO MOLEX INC. AND SHOULD NOT BE USED WITHOUT WRITTEN PERMISSION.

DIV. C | SIZE B

NO P.S.