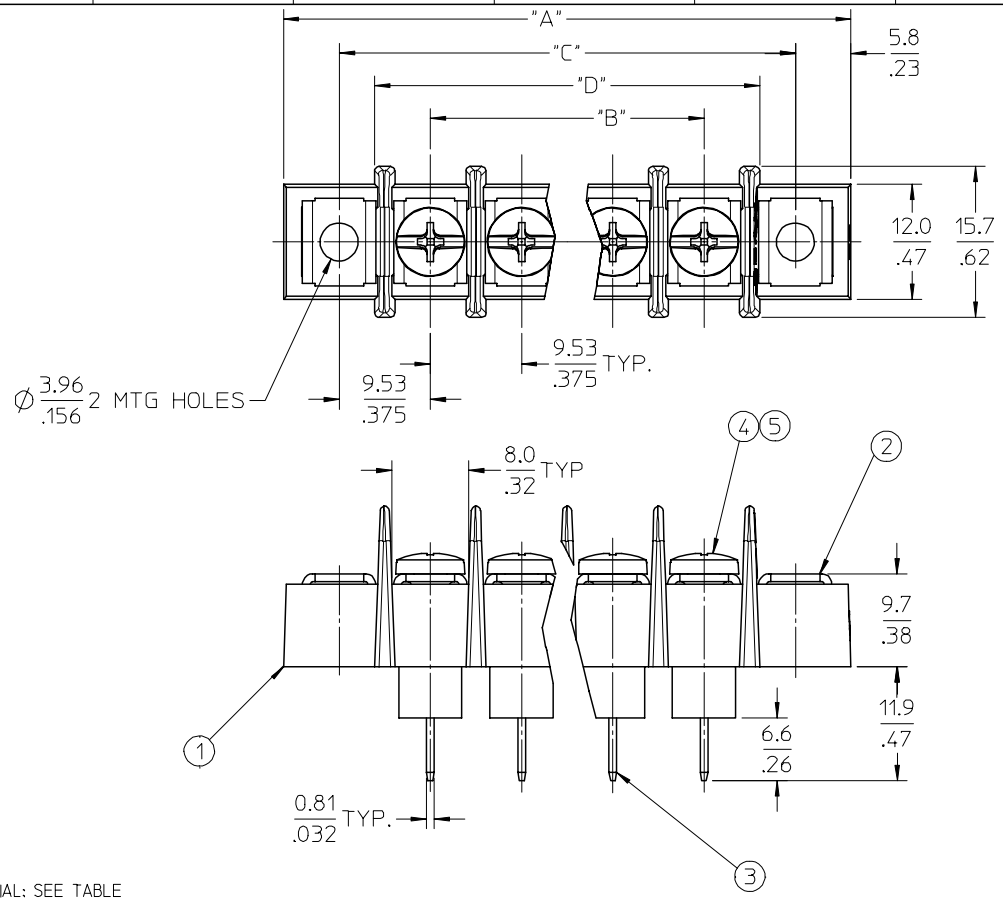

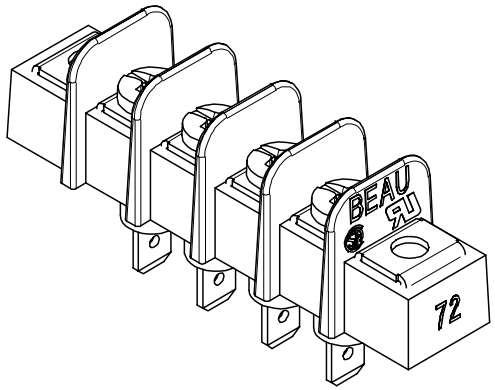

4 CIRCUIT SHOWN

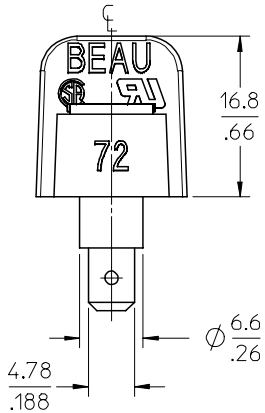

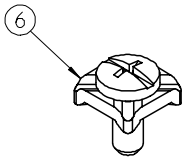

REF. -50 OPT. SCREW
(WHERE APPLICABLE)

NOTES:

1. MATERIAL: SEE TABLE
2. FINISHES: SEE TABLE
3. PRODUCT SPECIFICATION: NOT REQUIRED
4. PACKAGING: NOT REQUIRED
5. MATES WITH: N/A
6. "XX" REFERS TO THE QUANTITY OF CIRCUITS.

ITEM	QTY.	DESCRIPTION	MATERIAL	FINISH
6	XX	SCREW&WASHER, #6-32X.250 PAN, PH-SL, -50	STEEL	ZN, CLEAR CHROMATE
5	XX	SCREW, #6-32X.250 BHD, PHIL-SLOT, -49	BRASS	NICKEL PLATE
4	XX	SCREW, #6-32X.250 BHD, PHIL-SLOT (STD.)	STEEL	ZN, CLEAR CHROMATE
3	XX	TERMINAL, FAST TAB, STYLE 9, SN/B	BRASS	TIN PLATE
2	2	PLATE, MOUNTING, NI	BRASS	NICKEL PLATE
1	1	INSULATOR, 9.53MM, SR BTS, INSUL. BASE	PBT, 30% GF	BLACK

RELEASED
EC NO: ETC2006-0262
DRWN:CYORK 2006/02/20
CH'KD:RDEROSS 2006/02/21
APPR:RDEROSS 2006/02/21
DESCRIPTION
REV A

QUALITY SYMBOLS
▼=0
▽=0

GENERAL TOLERANCES (UNLESS SPECIFIED)

	mm	INCH
4 PLACES	± ---	±.0002
3 PLACES	± 0.005	±.005
2 PLACES	± 0.13	±.01
1 PLACE	± 0.25	± ---
ANGULAR ± 1 °		

DRAFT WHERE APPLICABLE MUST REMAIN WITHIN DIMENSIONS

DIMENSION STYLE: MM/IN
SCALE: 2:1
DESIGN UNITS: INCH
THIRD ANGLE PROJECTION

DRAWN BY: C. YORK DATE: 2006/02/16
CHECKED BY: RDEROSS DATE: 2006/02/16
APPROVED BY: RDEROSS DATE: 2006/02/16

TITLE: 9.53 [.375] SR BTS ASY, INSUL. FT, W/MTG

molex MOLEX INCORPORATED

MATERIAL NO.: SEE SHEET 2
DOCUMENT NO.: SD-38721-002
SHEET NO.: 1 OF 2
SIZE: B

THIS DRAWING CONTAINS INFORMATION THAT IS PROPRIETARY TO MOLEX INCORPORATED AND SHOULD NOT BE USED WITHOUT WRITTEN PERMISSION

NUMBER OF CIRCUITS "XX"	DIM. "A"	DIM. "B"	DIM. "C"	DIM. "D"	ASSEMBLY MATERIAL NO. (STD)	ASSEMBLY MATERIAL NO. (OPT -49)	ASSEMBLY MATERIAL NO. (OPT -50)
02	40.2 [1.58]	9.53 [.375]	28.58 [1.125]	21.1 [.83]	387216702	387217002	387217302
03	49.7 [1.96]	19.05 [.750]	38.10 [1.500]	30.7 [1.21]	387216703	387217003	387217303
04	59.2 [2.33]	28.58 [1.125]	47.63 [1.875]	40.2 [1.58]	387216704	387217004	387217304
05	68.7 [2.71]	38.10 [1.500]	57.15 [2.250]	49.7 [1.96]	387216705	387217005	387217305
06	78.3 [3.08]	47.63 [1.875]	66.68 [2.625]	59.2 [2.33]	387216706	387217006	387217306
07	87.8 [3.46]	57.15 [2.250]	76.20 [3.000]	68.8 [2.71]	387216707	387217007	387217307
08	97.3 [3.83]	66.68 [2.625]	85.73 [3.375]	78.3 [3.08]	387216708	387217008	387217308
09	106.8 [4.21]	76.20 [3.000]	95.25 [3.750]	87.8 [3.46]	387216709	387217009	387217309
10	116.4 [4.58]	85.73 [3.375]	104.78 [4.125]	97.3 [3.83]	387216710	387217010	387217310
11	125.9 [4.96]	95.25 [3.750]	114.30 [4.500]	106.9 [4.21]	387216711	387217011	387217311
12	135.4 [5.33]	104.78 [4.125]	123.83 [4.875]	116.4 [4.58]	387216712	387217012	387217312
13	144.9 [5.71]	114.30 [4.500]	133.35 [5.250]	125.9 [4.96]	387216713	387217013	387217313
14	154.5 [6.08]	123.83 [4.875]	142.88 [5.625]	135.4 [5.33]	387216714	387217014	387217314
15	164.0 [6.46]	133.35 [5.250]	152.40 [6.000]	145.0 [5.71]	387216715	387217015	387217315
16	173.5 [6.83]	142.88 [5.625]	161.93 [6.375]	154.5 [6.08]	387216716	387217016	387217316
17	183.0 [7.21]	152.40 [6.000]	171.45 [6.750]	164.0 [6.46]	387216717	387217017	387217317
18	192.6 [7.58]	161.93 [6.375]	180.98 [7.125]	173.5 [6.83]	387216718	387217018	387217318
19	202.1 [7.96]	171.45 [6.750]	190.50 [7.500]	183.1 [7.21]	387216719	387217019	387217319
20	211.6 [8.33]	180.98 [7.125]	200.03 [7.875]	192.6 [7.58]	387216720	387217020	387217320
21	221.1 [8.71]	190.50 [7.500]	209.55 [8.250]	202.1 [7.96]	387216721	387217021	387217321
22	230.7 [9.08]	200.03 [7.875]	219.08 [8.625]	211.6 [8.33]	387216722	387217022	387217322
23	240.2 [9.46]	209.55 [8.250]	228.60 [9.000]	221.2 [8.71]	387216723	387217023	387217323
24	249.7 [9.83]	219.08 [8.625]	238.13 [9.375]	230.7 [9.08]	387216724	387217024	387217324
25	259.2 [10.21]	228.60 [9.000]	247.65 [9.750]	240.2 [9.46]	387216725	387217025	387217325
26	268.8 [10.58]	238.13 [9.375]	257.18 [10.125]	249.7 [9.83]	387216726	387217026	387217326

NOTES:

1. INCH DIMENSIONS SHOWN IN BRACKETS [.XX].

SEE SHEET 1
EC NO: ETC2006-0262
DRWN:C.YORK 2006/02/20
CH'KD:RDEROSS 2006/02/21
APPR:RDEROSS 2006/02/21
DESCRIPTION
A
REV

QUALITY SYMBOLS
▼=0
▽=0

GENERAL TOLERANCES (UNLESS SPECIFIED)

	mm	INCH
4 PLACES	± ---	±.0002
3 PLACES	± 0.005	±.005
2 PLACES	± 0.13	±.01
1 PLACE	± 0.25	± ---
ANGULAR ± 1 °		

DRAFT WHERE APPLICABLE MUST REMAIN WITHIN DIMENSIONS

DIMENSION STYLE: MM/IN
SCALE: 1:1
DESIGN UNITS: INCH
THIRD ANGLE PROJECTION

DRAWN BY: C. YORK DATE: 2006/02/16
CHECKED BY: RDEROSS DATE: 2006/02/16
APPROVED BY: RDEROSS DATE: 2006/02/16

TITLE: 9.53 [.375] SR BTS ASY, INSUL. FT, W/MTG

molex MOLEX INCORPORATED

MATERIAL NO.: SEE CHART
DOCUMENT NO.: SD-38721-002
SHEET NO.: 2 OF 2
SIZE: B

THIS DRAWING CONTAINS INFORMATION THAT IS PROPRIETARY TO MOLEX INCORPORATED AND SHOULD NOT BE USED WITHOUT WRITTEN PERMISSION

Mouser Electronics

Authorized Distributor

Click to View Pricing, Inventory, Delivery & Lifecycle Information:

Molex:
38721-7316 38721-7318 38721-7303 38721-6714 38721-6716 38721-7002 38721-7003 38721-7004 38721-7005 38721-7006 38721-7008 38721-7009 38721-7012 38721-7022 38721-7305 38721-7307 38721-7309 38721-7310 38721-7311 38721-7312 38721-7313 38721-7314 38721-7315 38721-7322