MAT'L NO.	ENG NO.	MAT'L NO. (TAPED)	ENG NO. (TAPED)	STUD SIZE	"S" ± .005 (0.13)
191180054	BB-116-06	191180055	BB-116-06T	6	.146(3.71)
191180056	BB-116-08	191180057	BB-116-08T	8	.173(4.39)
191180058	BB-116-10	191180059	BB-116-10T	10	.198(5.03)

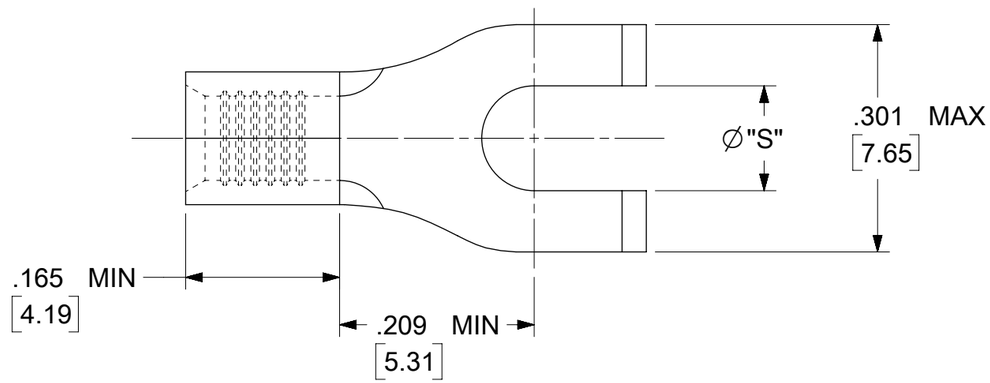

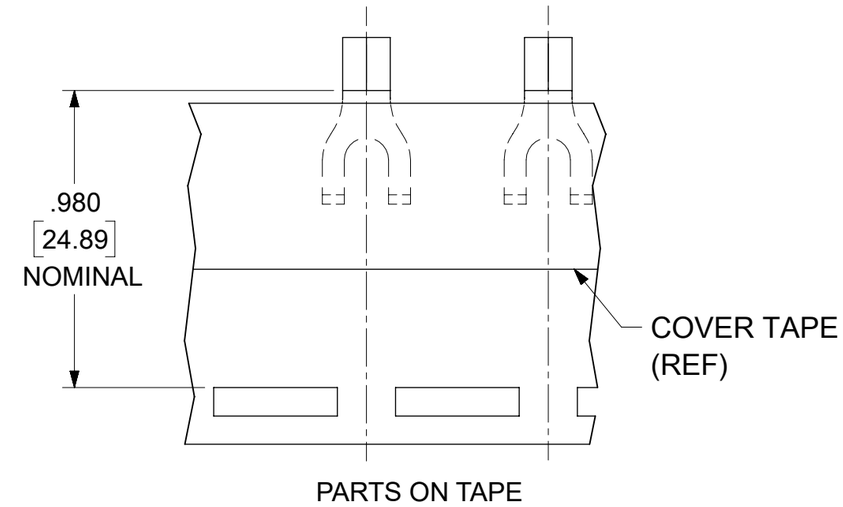

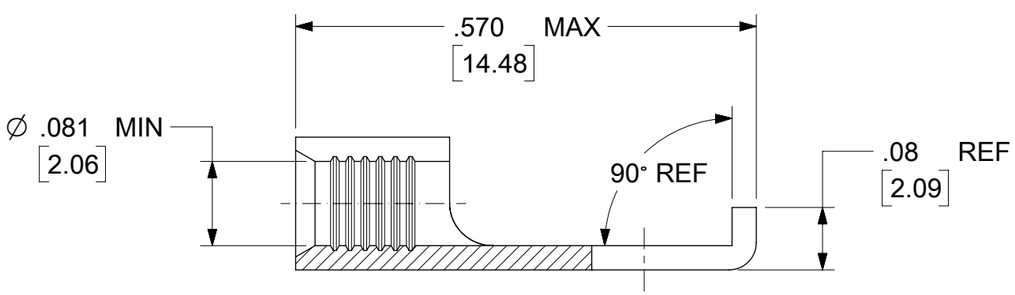

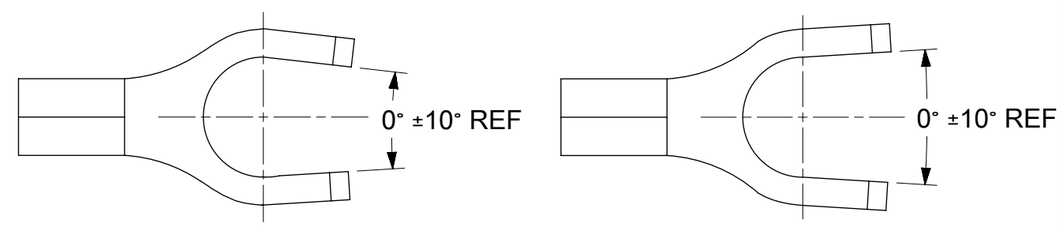

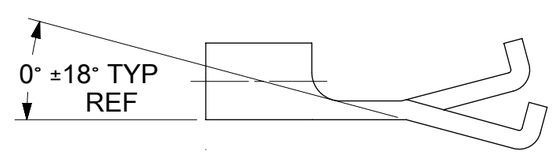

A1

ALLOWABLE BENDING OF PARTS.
PARTS WILL FLATTEN OUT DURING INSTALLATION.

NOTE(S):
1. MATERIAL: COPPER .031(0.79) THICK
2. PLATING: ELECTRO-TIN
3. PART IS RoHS COMPLIANT

DOCUMENT STATUS	P1	RELEASE DATE	2022/06/01 22:05:57

FUNCTIONAL SYMBOLS: EA = 0, EC = 0, EP = 0
DIVISIONAL SYMBOLS

THIS DRAWING CONTAINS INFORMATION THAT IS PROPRIETARY TO MOLEX ELECTRONIC TECHNOLOGIES, LLC AND SHOULD NOT BE USED WITHOUT WRITTEN PERMISSION

DIMENSION UNITS: INCH/MM
SCALE: NTS

GENERAL TOLERANCES (UNLESS SPECIFIED)

	MM	INCH
4 PLACES	±	±
3 PLACES	±	± 0.005
2 PLACES	± 0.13	± 0.01
1 PLACE	± 0.25	±
0 PLACES	±	±
ANGULAR TOL	± °	

DRAFT WHERE APPLICABLE MUST REMAIN WITHIN DIMENSIONS

CURRENT REV DESC: ADD ALLOWABLE BENDING DETAIL VIEW W/ DIM'S..

EC NO: 708739
DRWN: DMYRICK 2022/05/26
CHK'D: JMACNEIL 2022/06/01
APPR: JMACNEIL 2022/06/01

INITIAL REVISION:
DRWN:
APPR:

THIRD ANGLE PROJECTION | DRAWING: B-SIZE | SERIES: 19118

molex

FLANGED SPADE TONGUE
KRIMPTITE 16-14 AWG, SHORT BARREL

PRODUCT CUSTOMER DRAWING

DOCUMENT NUMBER	DOC TYPE	DOC PART	REVISION
SD-19118-001	PSD	001	A1

MATERIAL NUMBER | CUSTOMER: GENERAL MARKET | SHEET NUMBER: 1 OF 1