EM2796 Series
Euro-Mag Terminal Blocks
Screwless; 7.62 Centers

EM279606V

EM279603H

SPECIFICATIONS
Rating: 10A, 300V
Center Spacing: 0.30” (7.62mm)
Wire Range: #14-24 AWG
Housing Material: UL rated 94V0 Thermoplastic
Contact Material: Tin-Plated Brass
Operating Temperature: 105°C (221°F) max., -40°C (-40°F) min.
Recommended PCB Hole Diameters: 0.051" (1.30mm)
Construction: Mold-to-Length
Agency Information: c UL us File E62622; CE Certified

Poles	L (mm)	Poles	L (mm)
2	15.24	10	76.20
3	22.56	11	83.82
4	30.48	12	91.44
5	37,19	13	99.07
6	45.72	14	106.69
7	53.34	15	114.31
8	60.96	16	121.93
9	68.58		

To convert to inches, divide by 25.4

Dimensions - mm (in)

VERTICAL

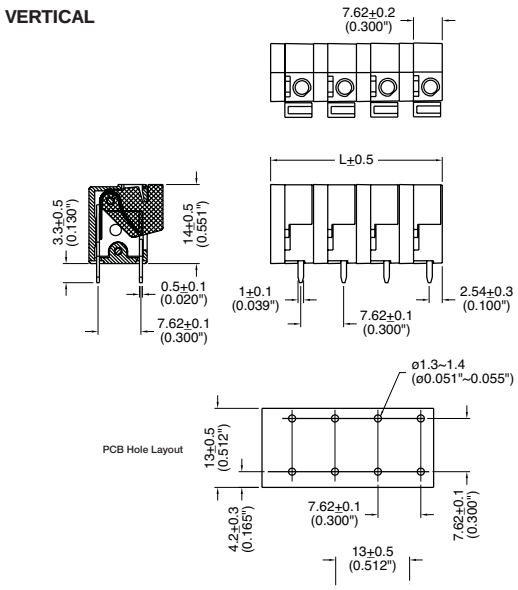

HORIZONTAL

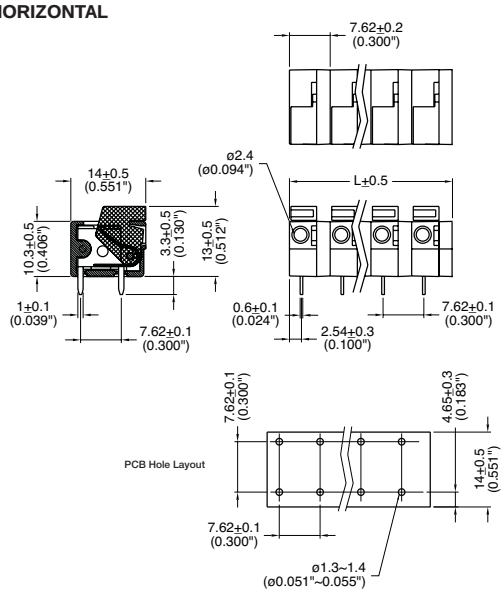

Part Numbering System

Series	# of Poles	Orientation
EM2796	☐☐	☐
	02 to **16**	**H** - horizontal **V** - vertical