Alle Rechte vorbehalten/ *All rights reserved*

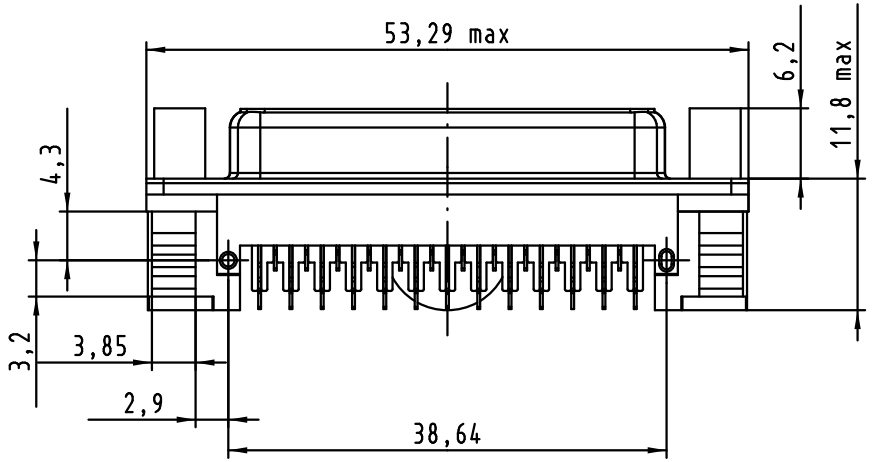

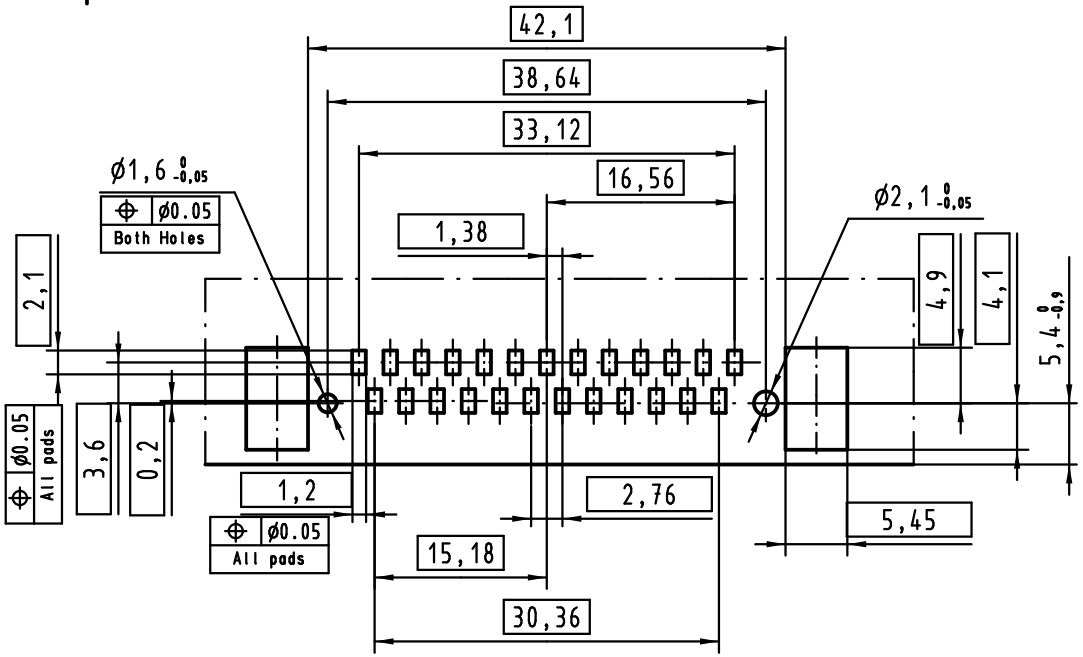

PCB Layout, component side (thickness 1,6mm min.)

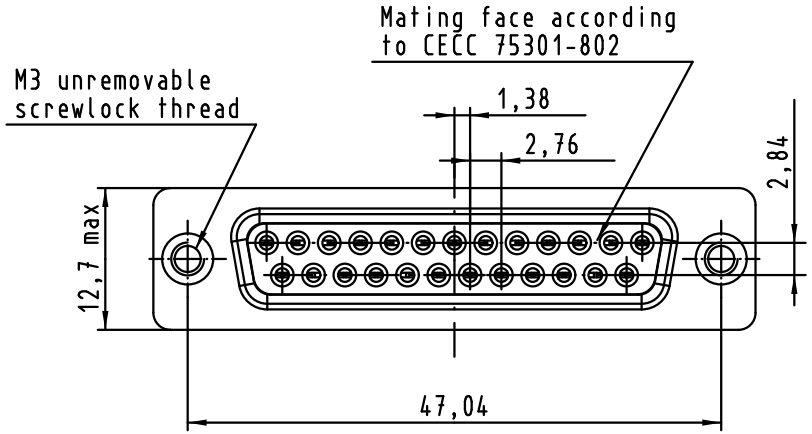

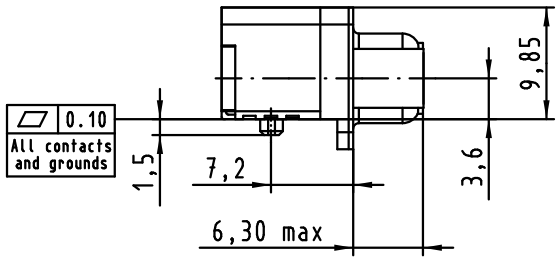

Max. Temperature: 260°C during 10 seconds

Part number	PL	Thread	Index designation			
09553563619.741	1	M3	Black Insulator	Reel Packaging (160 connectors) see page 2/2		
09553566619.741	2					
09553567619.741	3					

Mod.	Dat.	Name
EC01953	30Jun2010	ED

	Dat.	Name
Detail.	30Jun2010	ED
Insp.		
Stand.		

All Dim. in mm
Orig. Size DIN A 4

HARTING EURL
F-95972 Paris

D-SUB SMT
Low Profile Female 25p
with die casted grounds
and M3 unremovable screwlocks

Maßstab/ *Scale* 1,5:1

TB 09 55 356 x619

Sub.

Blatt/ *Page* 1/2

Released / Freigegeben 2010/07/22-12:32:55 UTC