REV.	ECN NO.	DATE	SIGN	DESCRIPTION
B	LEN1580276~78	2015/08/12	Lu Di	Change To Common Drawing
C	LEN1680343 LEN1680348~49	2016/08/06	Mafei	Updated The Pin Out Color.

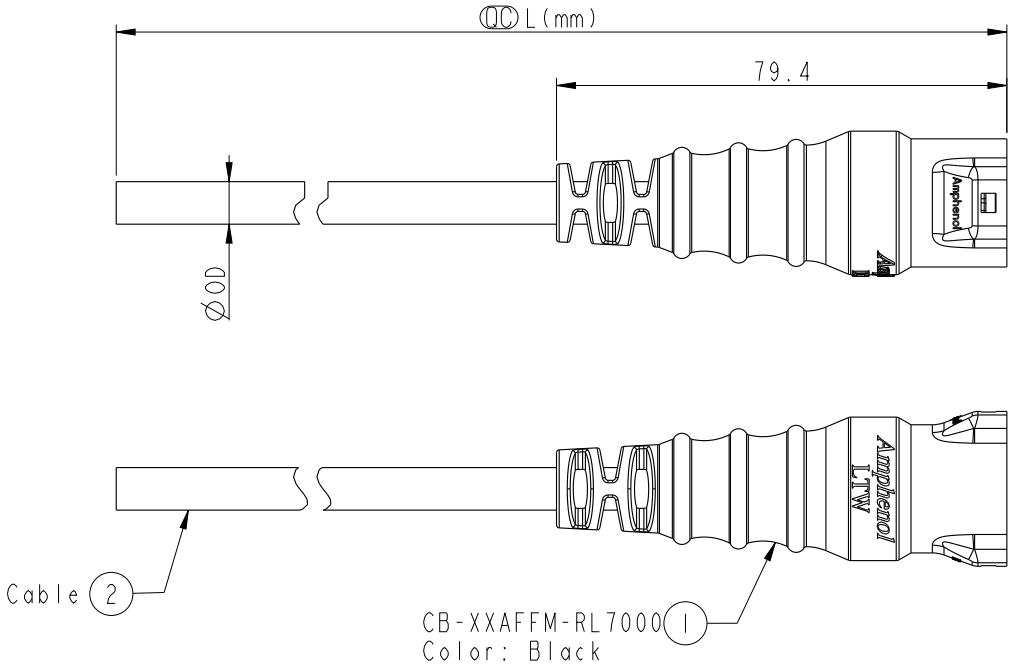

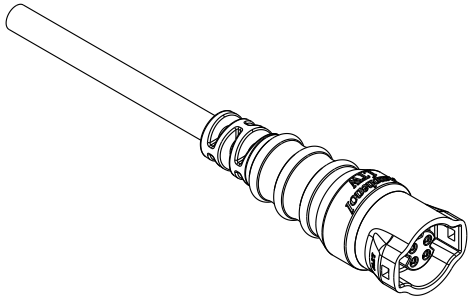

Conn

ALTW
CONFIDENTIAL
2016-08-06
R&D DEPT.

ALTW
DCC. DEPT.
CONFIDENTIAL
2016.08.12
ISSUED

Note:
* QC Important Dimension To Check.
* Waterproof Rate: IP67
* Housing: M-PPE, Black.
* Female Pin: Copper Alloy,Gold Plated.
* Cable: UL2464 16#,PVC Jacket, UV Resistant,Black.
* Cable Length Tolerance: 01M:±40mm
  02M~05M:±60mm
  06M~10M:±100mm
  11M~30M:±200mm
  31M~99M:±500mm
* Prohibiting the use of place in oils

B

CB-02AFFM-RL7AXX	Ø7.8
CB-03AFFM-RL7AXX	Ø7.5
CB-04AFFM-RL7AXX	Ø7.5
Part No.	Cable OD

UNIT: mm

TOLERANCE ±0.5

TITLE: MIDDLE CABLE RBL F CONN F PIN

SCALE 3:4 | SIZE A4 | SHEET 1 OF 2

REV. C | WC-REV. A.2 | QC: Inspection item

Amphenol LTW
安費諾亮泰企業股份有限公司

ITEM NO		DRAWN BY Mafei	DATE 2016/08/06
DWG NO CB-XXAFFM-RL7AXX		CHECKED BY Joyy	DATE 2016/08/06
CUSTOMER ALTW		APPROVED BY Jerry	DATE 2016/08/06

FMW10702-01-02A1

THIS DOCUMENT IS SUBJECT TO CHANGE WITHOUT NOTICE. IT IS CONFIDENTIAL AND A PROPERTY OF Amphenol LTW. DISCLOSURE TO THIRD PARTY HAS TO BE AUTHORIZED BY Amphenol LTW.

△B

CB-XXAFFM-RL7A XX

- Middle Size Current Rating 10A
- XX:No. Of Pin(Pin 數)
- A:Cable With S/R(線端帶網尾)
- F:Female Connector(母座)
- F:Female Pin(母Pin)
- M:Molding Type(射出成型)
- R:Snap In With Latch(彈臂卡合式)
- L:Straight(180°)
- 7:IP67(防水等級 67)
- A:UL 2464 Cable
- XX:01~99Meter
  - 01:01Meter
  - 02:02Meter
  - :
  - 99:99Meter

ALTW DCC. DEPT. CONFIDENTIAL 2016.08.12 ISSUED

ALTW CONFIDENTIAL 2016-08-06 R&D DEPT.

Pin Out	4 -- 3 Red 紅 2 -- 1 Black 黑	4 Green 綠 3 White 白 △C 2 -- 1 Black 黑	4 Orange 橙 3 Red 紅 2 Brown 棕 1 Black 黑
Pin Assignments Front View	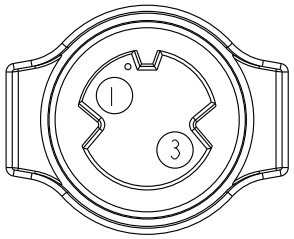 2Pin	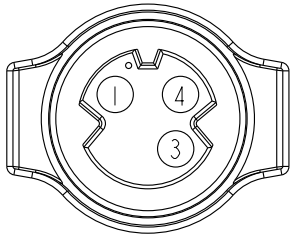 3Pin	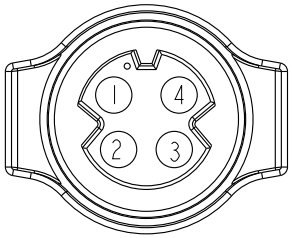 4Pin

UNIT:mm	TITLE MIDDLE CABLE RBL F CONN F PIN	Amphenol LTW 安費諾亮泰企業股份有限公司	ITEM NO	DRAWN BY Mafei	DATE 2016/08/06
TOLERANCE ±0.5	SCALE 3:4 / SIZE A4 / SHEET 2 OF 2		DWG NO CB-XXAFFM-RL7AXX	CHECKED BY Joyy	DATE 2016/08/06
	REV. C / WC-REV. A.2	QC:Inspection item	CUSTOMER ALTW	APPROVED BY Jerry	DATE 2016/08/06

THIS DOCUMENT IS SUBJECT TO CHANGE WITHOUT NOTICE. IT IS CONFIDENTIAL AND A PROPERTY OF Amphenol LTW. DISCLOSURE TO THIRD PARTY HAS TO BE AUTHORIZED BY Amphenol LTW.

FMW10702-01-02A1