Automotive LPDDR4/LPDDR4X SDRAM

MT53E256M16D1, MT53E256M32D2

Features

This data sheet specifies the operation of the unified LPDDR4 and LPDDR4X product, and first describes specific requirements for LPDDR4X 0.6V V_{DDQ} operation. When using the product as an LPDDR4 device, refer to LPDDR4 setting section LPDDR4 1.10V V_{DDQ} at the end of this data sheet.

- Ultra-low-voltage core and I/O power supplies
  - V_{DD1} = 1.70–1.95V; 1.80V nominal
  - V_{DD2} = 1.06–1.17V; 1.10V nominal
  - V_{DDQ} = 1.06–1.17V; 1.10V nominal or Low V_{DDQ} = 0.57–0.65V; 0.60V nominal
- Frequency range
  - 2133–10 MHz (data rate range: 4266–20 Mb/s/pin)
- 16*n* prefetch DDR architecture
- 8 internal banks per channel for concurrent operation
- Single-data-rate CMD/ADR entry
- Bidirectional/differential data strobe per byte lane
- Programmable READ and WRITE latencies (RL/WL)
- Programmable and on-the-fly burst lengths (BL = 16, 32)
- Directed per-bank refresh for concurrent bank operation and ease of command scheduling
- Up to 8.5 GB/s per die
- On-chip temperature sensor to control self refresh rate
- Partial-array self refresh (PASR)
- Selectable output drive strength (DS)
- Clock-stop capability
- RoHS-compliant, "green" packaging
- Programmable V_{SS} (ODT) termination
- AEC-Q100

Options	Marking
• $V_{DD1}/V_{DD2}/V_{DDQ}$: 1.80V/1.10V/0.60V or 1.10V	E
• Array configuration	
– 256 Meg × 16 (1 channel ×16 I/O)	256M16
– 256 Meg × 32 (2 channels ×16 I/O)	256M32
• Device configuration	
– 256M16 × 1 die in package	D1
– 256M16 × 2 die in package	D2
• FBGA "green" package	
– 200-ball WFBGA (10mm × 14.5mm × 0.8mm, Ø0.35 SMD)	DS
• Speed grade, cycle time	
– 535ps @ RL = 32/36	-053
– 468ps @ RL = 36/40	-046
• Operating temperature range	
– –40°C to +95°C	IT
– –40°C to +105°C	AT
– –40°C to +125°C	UT[1]
• Revision	:B

Note: 1. Based on automotive usage model. Contact Micron sales representative with questions.

Table 1: Key Timing Parameters

Speed Grade	Clock Rate (MHz)	Data Rate (Mb/s/pin)	WRITE Latency		READ Latency	
			Set A	Set B	DBI Disabled	DBI Enabled
-053	1866	3733	16	30	32	36
-046	2133	4266	18	34	36	40

Micron Technology, Inc. reserves the right to change products or specifications without notice.
© 2017 Micron Technology, Inc. All rights reserved.
Products and specifications discussed herein are subject to change by Micron without notice.

SDRAM Addressing

The table below shows 4Gb single-channel die configuration used in the package.

Table 2: Device Configuration

		256M16 (4Gb/Package)	256M32 (8Gb/Package)
Die configuration	Channel A, rank 0	×16 mode × 1 die	×16 mode × 1 die
	Channel B, rank 0	–	×16 mode × 1 die
Die addressing	Bank address	BA[2:0]	BA[2:0]
	Row addresses	R[14:0]	R[14:0]
	Column addresses	C[9:0]	C[9:0]

Note: 1. Refer to Package Block Diagrams section and Monolithic Device Addressing section.

Micron Technology, Inc. reserves the right to change products or specifications without notice.
© 2017 Micron Technology, Inc. All rights reserved.

Part Number and Part Marking Information

Part Number Ordering

Micron LPDDR4 devices are available in different configurations and densities. Verify valid part numbers by using Micron's part catalog search at www.micron.com. To compare features and specifications by device type, visit www.micron.com/products. Contact the factory for devices not found.

Figure 1: Part Number Chart

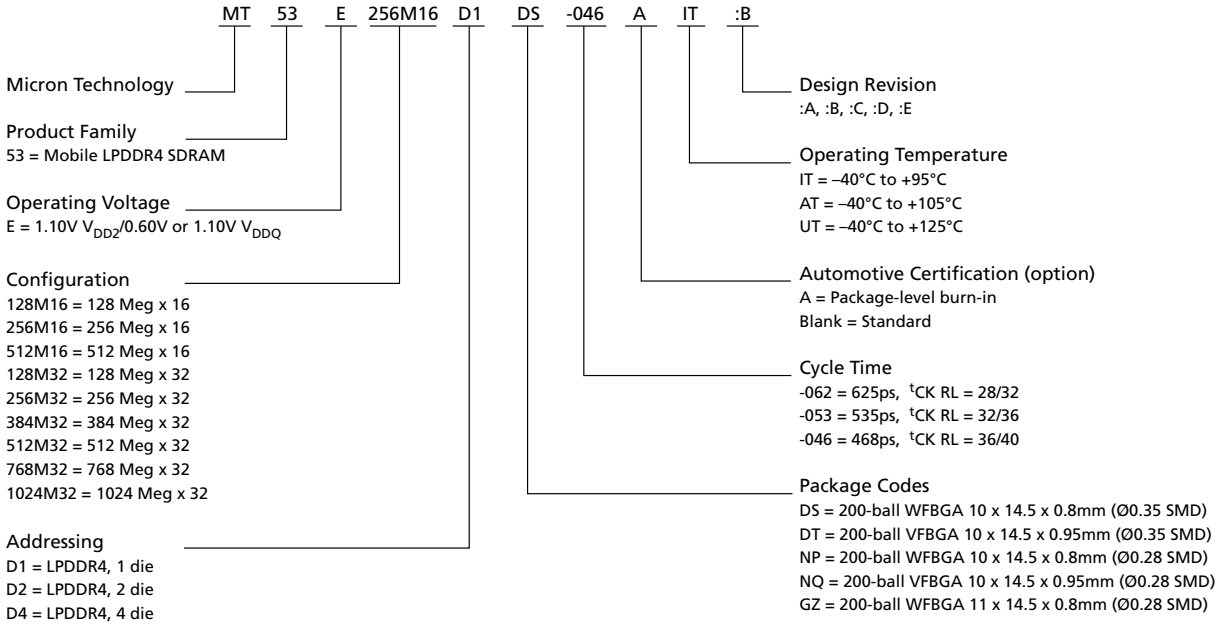

FBGA Part Marking Decoder

Due to space limitations, FBGA-packaged components have an abbreviated part marking that is different from the part number. Micron's FBGA part marking decoder is available at www.micron.com/decoder.

Micron Technology, Inc. reserves the right to change products or specifications without notice.
© 2017 Micron Technology, Inc. All rights reserved.

Contents

Important Notes and Warnings 17
General Description 18
General Notes 18
Package Block Diagrams 19
Ball Assignments and Descriptions 20
Package Dimensions 23
MR0, MR[6:5], MR8, MR13, MR24 Definition 24
LPDDR4 I_{DD} Parameters 25
LPDDR4X I_{DD} Parameters 29
Functional Description 33
Monolithic Device Addressing 34
Simplified Bus Interface State Diagram 37
Power-Up and Initialization 38
Voltage Ramp 39
Reset Initialization with Stable Power 41
Power-Off Sequence 42
Controlled Power-Off 42
Uncontrolled Power-Off 42
Mode Registers 43
Mode Register Assignments and Definitions 43
Commands and Timing 69
Truth Tables 69
ACTIVATE Command 71
Read and Write Access Modes 73
Preamble and Postamble 73
Burst READ Operation 77
Read Timing 79
^{t}LZ(DQS), ^{t}LZ(DQ), ^{t}HZ(DQS), ^{t}HZ(DQ) Calculation 79
^{t}LZ(DQS) and ^{t}HZ(DQS) Calculation for ATE (Automatic Test Equipment) 80
^{t}LZ(DQ) and ^{t}HZ(DQ) Calculation for ATE (Automatic Test Equipment) 81
Burst WRITE Operation 83
Write Timing 86
^{t}WPRE Calculation for ATE (Automatic Test Equipment) 87
^{t}WPST Calculation for ATE (Automatic Test Equipment) 87
MASK WRITE Operation 88
Mask Write Timing Constraints for BL16 90
Data Mask and Data Bus Inversion (DBI [DC]) Function 92
WRITE and MASKED WRITE Operation DQS Control (WDQS Control) 96
WDQS Control Mode 1 – Read-Based Control 96
WDQS Control Mode 2 – WDQS_On/Off 96
Preamble and Postamble Behavior 100
Preamble, Postamble Behavior in READ-to-READ Operations 100
READ-to-READ Operations – Seamless 101
READ-to-READ Operations – Consecutive 102
WRITE-to-WRITE Operations – Seamless 109
WRITE-to-WRITE Operations – Consecutive 112
PRECHARGE Operation 116
Burst READ Operation Followed by Precharge 116
Burst WRITE Followed by Precharge 117
Auto Precharge 118

Micron Technology, Inc. reserves the right to change products or specifications without notice.
© 2017 Micron Technology, Inc. All rights reserved.

Burst READ With Auto Precharge 118
Burst WRITE With Auto Precharge 119
RAS Lock Function 123
Delay Time From WRITE-to-READ with Auto Precharge 124
REFRESH Command 125
Burst READ Operation Followed by Per Bank Refresh 131
Refresh Requirement 132
SELF REFRESH Operation 133
Self Refresh Entry and Exit 133
Power-Down Entry and Exit During Self Refresh 134
Command Input Timing After Power-Down Exit 135
Self Refresh Abort 136
MRR, MRW, MPC Commands During ^{t}XSR, ^{t}RFC 136
Power-Down Mode 139
Power-Down Entry and Exit 139
Input Clock Stop and Frequency Change 149
Clock Frequency Change – CKE LOW 149
Clock Stop – CKE LOW 149
Clock Frequency Change – CKE HIGH 149
Clock Stop – CKE HIGH 150
MODE REGISTER READ Operation 151
MRR After a READ and WRITE Command 152
MRR After Power-Down Exit 154
MODE REGISTER WRITE 155
Mode Register Write States 156
V_{REF} Current Generator (VRCG) 157
V_{REF} Training 159
$V_{REF(CA)}$ Training 159
$V_{REF(DQ)}$ Training 164
Command Bus Training 169
Command Bus Training Mode 169
Training Sequence for Single-Rank Systems 170
Training Sequence for Multiple-Rank Systems 171
Relation Between CA Input Pin and DQ Output Pin 172
Write Leveling 176
Mode Register Write-WR Leveling Mode 176
Write Leveling Procedure 176
Input Clock Frequency Stop and Change 177
MULTIPURPOSE Operation 180
Read DQ Calibration Training 185
Read DQ Calibration Training Procedure 185
Read DQ Calibration Training Example 187
MPC[READ DQ CALIBRATION] After Power-Down Exit 188
Write Training 188
Internal Interval Timer 194
DQS Interval Oscillator Matching Error 196
OSC Count Readout Time 197
Thermal Offset 199
Temperature Sensor 199
ZQ Calibration 200
ZQCAL Reset 201
Multichannel Considerations 202

Micron Technology, Inc. reserves the right to change products or specifications without notice.
© 2017 Micron Technology, Inc. All rights reserved.

ZQ External Resistor, Tolerance, and Capacitive Loading 202
Frequency Set Points 203
Frequency Set Point Update Timing 204
Pull-Up and Pull-Down Characteristics and Calibration 208
On-Die Termination for the Command/Address Bus 209
ODT Mode Register and ODT State Table 209
ODT Mode Register and ODT Characteristics 210
ODT for CA Update Time 211
DQ On-Die Termination 211
Output Driver and Termination Register Temperature and Voltage Sensitivity 213
ODT Mode Register 214
Asynchronous ODT 214
DQ ODT During Power-Down and Self Refresh Modes 216
ODT During Write Leveling Mode 216
Target Row Refresh Mode 217
TRR Mode Operation 217
Post-Package Repair 219
Failed Row Address Repair 219
Read Preamble Training 221
Electrical Specifications 222
Absolute Maximum Ratings 222
AC and DC Operating Conditions 222
AC and DC Input Measurement Levels 224
Input Levels for CKE 224
Input Levels for RESET_n 224
Differential Input Voltage for CK 224
Peak Voltage Calculation Method 225
Single-Ended Input Voltage for Clock 226
Differential Input Slew Rate Definition for Clock 227
Differential Input Cross-Point Voltage 228
Differential Input Voltage for DQS 229
Peak Voltage Calculation Method 229
Single-Ended Input Voltage for DQS 230
Differential Input Slew Rate Definition for DQS 231
Differential Input Cross-Point Voltage 232
Input Levels for ODT_CA 233
Output Slew Rate and Overshoot/Undershoot specifications 233
Single-Ended Output Slew Rate 233
Differential Output Slew Rate 234
Overshoot and Undershoot Specifications 235
Driver Output Timing Reference Load 235
LVSTL I/O System 236
Input/Output Capacitance 237
I_{DD} Specification Parameters and Test Conditions 238
I_{DD} Specifications 254
AC Timing 256
CA Rx Voltage and Timing 266
DQ Tx Voltage and Timing 269
DRAM Data Timing 269
DQ Rx Voltage and Timing 270
Clock Specification 273
^{t}CK(abs), ^{t}CH(abs), and ^{t}CL(abs) 274

Micron Technology, Inc. reserves the right to change products or specifications without notice.
© 2017 Micron Technology, Inc. All rights reserved.

Clock Period Jitter 274
Clock Period Jitter Effects on Core Timing Parameters 274
Cycle Time Derating for Core Timing Parameters 275
Clock Cycle Derating for Core Timing Parameters 275
Clock Jitter Effects on Command/Address Timing Parameters 275
Clock Jitter Effects on READ Timing Parameters 275
Clock Jitter Effects on WRITE Timing Parameters 276
LPDDR4 1.10V V_{DDQ} 277
Power-Up and Initialization - LPDDR4 277
Mode Register Definition - LPDDR4 278
Burst READ Operation - LPDDR4 ATE Condition 287
^{t}LZ(DQS), ^{t}LZ(DQ), ^{t}HZ(DQS), ^{t}HZ(DQ) Calculation 287
^{t}LZ(DQS) and ^{t}HZ(DQS) Calculation for ATE (Automatic Test Equipment) 287
^{t}LZ(DQ) and ^{t}HZ(DQ) Calculation for ATE (Automatic Test Equipment) 289
V_{REF} Specifications - LPDDR4 291
Internal $V_{REF(CA)}$ Specifications 291
Internal $V_{REF(DQ)}$ Specifications 292
Command Definitions and Timing Diagrams - LPDDR4 294
Pull Up/Pull Down Driver Characteristics and Calibration 294
On-Die Termination for the Command/Address Bus 294
ODT Mode Register and ODT State Table 295
ODT Mode Register and ODT Characteristics 296
DQ On-Die Termination 297
Output Driver and Termination Register Temperature and Voltage Sensitivity 300
AC and DC Operating Conditions - LPDDR4 301
Recommended DC Operating Conditions 301
Output Slew Rate and Overshoot/Undershoot specifications - LPDDR4 301
Single-Ended Output Slew Rate 301
Differential Output Slew Rate 302
LVSTL I/O System - LPDDR4 303
Revision History 305
Rev. C – 4/19 305
Rev. B – 5/18 305
Rev. A – 11/17 305

Micron Technology, Inc. reserves the right to change products or specifications without notice.
© 2017 Micron Technology, Inc. All rights reserved.

List of Figures

Figure 1: Part Number Chart ... 3
Figure 2: Single-Die, Single-Channel, Single-Rank Package Block Diagram (x16 I/O) ... 19
Figure 3: Dual-Die, Dual-Channel, Single-Rank Package Block Diagram (x32 I/O) ... 19
Figure 4: 200-Ball Single-Channel, Single-Rank Discrete FBGA (x16 I/O) ... 20
Figure 5: 200-Ball Dual-Channel, Single-Rank Discrete FBGA (x32 I/O) ... 21
Figure 6: 200-Ball WFBGA – 10mm x 14.5mm (Package Code: DS) ... 23
Figure 7: Functional Block Diagram ... 34
Figure 8: Simplified State Diagram ... 37
Figure 9: Simplified State Diagram ... 38
Figure 10: Voltage Ramp and Initialization Sequence ... 40
Figure 11: ACTIVATE Command ... 72
Figure 12: ^{t}FAW Timing ... 73
Figure 13: DQS Read Preamble and Postamble – Toggling Preamble and 0.5*n*CK Postamble ... 74
Figure 14: DQS Read Preamble and Postamble – Static Preamble and 1.5*n*CK Postamble ... 74
Figure 15: DQS Write Preamble and Postamble – 0.5*n*CK Postamble ... 75
Figure 16: DQS Write Preamble and Postamble – 1.5*n*CK Postamble ... 76
Figure 17: Burst Read Timing ... 77
Figure 18: Burst Read Followed by Burst Write or Burst Mask Write ... 78
Figure 19: Seamless Burst Read ... 78
Figure 20: Read Timing ... 79
Figure 21: ^{t}LZ(DQS) Method for Calculating Transitions and Endpoint ... 80
Figure 22: ^{t}HZ(DQS) Method for Calculating Transitions and Endpoint ... 80
Figure 23: ^{t}LZ(DQ) Method for Calculating Transitions and Endpoint ... 81
Figure 24: ^{t}HZ(DQ) Method for Calculating Transitions and Endpoint ... 82
Figure 25: Burst WRITE Operation ... 84
Figure 26: Burst Write Followed by Burst Read ... 85
Figure 27: Write Timing ... 86
Figure 28: Method for Calculating ^{t}WPRE Transitions and Endpoints ... 87
Figure 29: Method for Calculating ^{t}WPST Transitions and Endpoints ... 87
Figure 30: MASK WRITE Command – Same Bank ... 88
Figure 31: MASK WRITE Command – Different Bank ... 89
Figure 32: MASKED WRITE Command with Write DBI Enabled; DM Enabled ... 94
Figure 33: WRITE Command with Write DBI Enabled; DM Disabled ... 95
Figure 34: WDQS Control Mode 1 ... 96
Figure 35: Burst WRITE Operation ... 98
Figure 36: Burst READ Followed by Burst WRITE or Burst MASKED WRITE (ODT Disable) ... 99
Figure 37: Burst READ Followed by Burst WRITE or Burst MASKED WRITE (ODT Enable) ... 100
Figure 38: READ Operations: ^{t}CCD = MIN, Preamble = Toggle, 1.5*n*CK Postamble ... 101
Figure 39: Seamless READ: ^{t}CCD = MIN + 1, Preamble = Toggle, 1.5*n*CK Postamble ... 102
Figure 40: Consecutive READ: ^{t}CCD = MIN + 1, Preamble = Toggle, 0.5*n*CK Postamble ... 102
Figure 41: Consecutive READ: ^{t}CCD = MIN + 1, Preamble = Static, 1.5*n*CK Postamble ... 103
Figure 42: Consecutive READ: ^{t}CCD = MIN + 1, Preamble = Static, 0.5*n*CK Postamble ... 103
Figure 43: Consecutive READ: ^{t}CCD = MIN + 2, Preamble = Toggle, 1.5*n*CK Postamble ... 104
Figure 44: Consecutive READ: ^{t}CCD = MIN + 2, Preamble = Toggle, 0.5*n*CK Postamble ... 105
Figure 45: Consecutive READ: ^{t}CCD = MIN + 2, Preamble = Static, 1.5*n*CK Postamble ... 105
Figure 46: Consecutive READ: ^{t}CCD = MIN + 2, Preamble = Static, 0.5*n*CK Postamble ... 106
Figure 47: Consecutive READ: ^{t}CCD = MIN + 3, Preamble = Toggle, 1.5*n*CK Postamble ... 107
Figure 48: Consecutive READ: ^{t}CCD = MIN + 3, Preamble = Toggle, 0.5*n*CK Postamble ... 107
Figure 49: Consecutive READ: ^{t}CCD = MIN + 3, Preamble = Static, 1.5*n*CK Postamble ... 108
Figure 50: Consecutive READ: ^{t}CCD = MIN + 3, Preamble = Static, 0.5*n*CK Postamble ... 108

Micron Technology, Inc. reserves the right to change products or specifications without notice.
© 2017 Micron Technology, Inc. All rights reserved.

Figure 51: Seamless WRITE: ^{t}CCD = MIN, 0.5*n*CK Postamble 109
Figure 52: Seamless WRITE: ^{t}CCD = MIN, 1.5*n*CK Postamble, 533 MHz < Clock Frequency ≤ 800 MHz, ODT Worst Timing Case 110
Figure 53: Seamless WRITE: ^{t}CCD = MIN, 1.5*n*CK Postamble 111
Figure 54: Consecutive WRITE: ^{t}CCD = MIN + 1, 0.5*n*CK Postamble 112
Figure 55: Consecutive WRITE: ^{t}CCD = MIN + 1, 1.5*n*CK Postamble 112
Figure 56: Consecutive WRITE: ^{t}CCD = MIN + 2, 0.5*n*CK Postamble 113
Figure 57: Consecutive WRITE: ^{t}CCD = MIN + 2, 1.5*n*CK Postamble 113
Figure 58: Consecutive WRITE: ^{t}CCD = MIN + 3, 0.5*n*CK Postamble 114
Figure 59: Consecutive WRITE: ^{t}CCD = MIN + 3, 1.5*n*CK Postamble 115
Figure 60: Consecutive WRITE: ^{t}CCD = MIN + 4, 1.5*n*CK Postamble 115
Figure 61: Burst READ Followed by Precharge – BL16, Toggling Preamble, 0.5*n*CK Postamble 117
Figure 62: Burst READ Followed by Precharge – BL32, 2^{t}CK, 0.5*n*CK Postamble 117
Figure 63: Burst WRITE Followed by PRECHARGE – BL16, 2*n*CK Preamble, 0.5*n*CK Postamble 118
Figure 64: Burst READ With Auto Precharge – BL16, Non-Toggling Preamble, 0.5*n*CK Postamble 119
Figure 65: Burst READ With Auto Precharge – BL32, Toggling Preamble, 1.5*n*CK Postamble 119
Figure 66: Burst WRITE With Auto Precharge – BL16, 2*n*CK Preamble, 0.5*n*CK Postamble 120
Figure 67: Command Input Timing with RAS Lock 124
Figure 68: Delay Time From WRITE-to-READ with Auto Precharge 124
Figure 69: All-Bank REFRESH Operation 127
Figure 70: Per Bank REFRESH Operation 128
Figure 71: Postponing REFRESH Commands (Example) 130
Figure 72: Pulling in REFRESH Commands (Example) 130
Figure 73: Burst READ Operation Followed by Per Bank Refresh 131
Figure 74: Burst READ With AUTO PRECHARGE Operation Followed by Per Bank Refresh 132
Figure 75: Self Refresh Entry/Exit Timing 134
Figure 76: Self Refresh Entry/Exit Timing with Power-Down Entry/Exit 135
Figure 77: Command Input Timings after Power-Down Exit During Self Refresh 136
Figure 78: MRR, MRW, and MPC Commands Issuing Timing During ^{t}XSR 137
Figure 79: MRR, MRW, and MPC Commands Issuing Timing During ^{t}RFC 138
Figure 80: Basic Power-Down Entry and Exit Timing 140
Figure 81: Read and Read with Auto Precharge to Power-Down Entry 141
Figure 82: Write and Mask Write to Power-Down Entry 142
Figure 83: Write With Auto Precharge and Mask Write With Auto Precharge to Power-Down Entry 143
Figure 84: Refresh Entry to Power-Down Entry 144
Figure 85: ACTIVATE Command to Power-Down Entry 144
Figure 86: PRECHARGE Command to Power-Down Entry 145
Figure 87: Mode Register Read to Power-Down Entry 146
Figure 88: Mode Register Write to Power-Down Entry 147
Figure 89: MULTI PURPOSE Command for ZQCAL Start to Power-Down Entry 148
Figure 90: MODE REGISTER READ Operation 152
Figure 91: READ-to-MRR Timing 153
Figure 92: WRITE-to-MRR Timing 154
Figure 93: MRR Following Power-Down 155
Figure 94: MODE REGISTER WRITE Timing 155
Figure 95: VRCG Enable Timing 158
Figure 96: VRCG Disable Timing 158
Figure 97: V_{REF} Operating Range ($V_{REF,max}$, $V_{REF,min}$) 159
Figure 98: V_{REF} Set-Point Tolerance and Step Size 160
Figure 99: $^{t}V_{ref}$ for Short, Middle, and Long Timing Diagram 161
Figure 100: $V_{REF(CA)}$ Single-Step Increment 161
Figure 101: $V_{REF(CA)}$ Single-Step Decrement 162

Micron Technology, Inc. reserves the right to change products or specifications without notice.
© 2017 Micron Technology, Inc. All rights reserved.

Figure 102: $V_{REF(CA)}$ Full Step from $V_{REF,min}$ to $V_{REF,max}$ 162
Figure 103: $V_{REF(CA)}$ Full Step from $V_{REF,max}$ to $V_{REF,min}$ 162
Figure 104: V_{REF} Operating Range ($V_{REF,max}$, $V_{REF,min}$) 164
Figure 105: V_{REF} Set Tolerance and Step Size 165
Figure 106: $V_{REF(DQ)}$ Transition Time for Short, Middle, or Long Changes 166
Figure 107: $V_{REF(DQ)}$ Single-Step Size Increment 166
Figure 108: $V_{REF(DQ)}$ Single-Step Size Decrement 167
Figure 109: $V_{REF(DQ)}$ Full Step from $V_{REF,min}$ to $V_{REF,max}$ 167
Figure 110: $V_{REF(DQ)}$ Full Step from $V_{REF,max}$ to $V_{REF,min}$ 167
Figure 111: Command Bus Training Mode Entry – CA Training Pattern I/O with $V_{REF(CA)}$ Value Update 172
Figure 112: Consecutive $V_{REF(CA)}$ Value Update 173
Figure 113: Command Bus Training Mode Exit with Valid Command 174
Figure 114: Command Bus Training Mode Exit with Power-Down Entry 175
Figure 115: Write Leveling Timing – ^{t}DQSL(MAX) 177
Figure 116: Write Leveling Timing – ^{t}DQSL(MIN) 177
Figure 117: Clock Stop and Timing During Write Leveling 178
Figure 118: DQS_t/DQS_c to CK_t/CK_c Timings at the Pins Referenced from the Internal Latch 179
Figure 119: WRITE-FIFO – ^{t}WPRE = 2*n*CK, ^{t}WPST = 0.5*n*CK 181
Figure 120: READ-FIFO – ^{t}WPRE = 2*n*CK, ^{t}WPST = 0.5*n*CK, ^{t}RPRE = Toggling, ^{t}RPST = 1.5*n*CK 182
Figure 121: READ-FIFO – ^{t}RPRE = Toggling, ^{t}RPST = 1.5*n*CK 183
Figure 122: Read DQ Calibration Training Timing: Read-to-Read DQ Calibration 186
Figure 123: Read DQ Calibration Training Timing: Read DQ Calibration to Read DQ Calibration/Read 186
Figure 124: MPC[READ DQ CALIBRATION] Following Power-Down State 188
Figure 125: WRITE-to-MPC[WRITE-FIFO] Operation Timing 190
Figure 126: MPC[WRITE-FIFO]-to-MPC[READ-FIFO] Timing 191
Figure 127: MPC[READ-FIFO] to Read Timing 192
Figure 128: MPC[WRITE-FIFO] with DQ ODT Timing 193
Figure 129: Power-Down Exit to MPC[WRITE-FIFO] Timing 194
Figure 130: Interval Oscillator Offset – OSC_{offset} 196
Figure 131: In Case of DQS Interval Oscillator is Stopped by MPC Command 197
Figure 132: In Case of DQS Interval Oscillator is Stopped by DQS Interval Timer 198
Figure 133: Temperature Sensor Timing 200
Figure 134: ZQCAL Timing 201
Figure 135: Frequency Set Point Switching Timing 205
Figure 136: Training for Two Frequency Set Points 207
Figure 137: Example of Switching Between Two Trained Frequency Set Points 207
Figure 138: Example of Switching to a Third Trained Frequency Set Point 208
Figure 139: ODT for CA 209
Figure 140: ODT for CA Setting Update Timing in 4-Clock Cycle Command 211
Figure 141: Functional Representation of DQ ODT 212
Figure 142: Asynchronous ODTon/ODToff Timing 215
Figure 143: Target Row Refresh Mode 218
Figure 144: Post-Package Repair Timing 220
Figure 145: Read Preamble Training 221
Figure 146: Input Timing Definition for CKE 224
Figure 147: Input Timing Definition for RESET_n 224
Figure 148: CK Differential Input Voltage 225
Figure 149: Definition of Differential Clock Peak Voltage 226
Figure 150: Clock Single-Ended Input Voltage 226
Figure 151: Differential Input Slew Rate Definition for CK_t, CK_c 227
Figure 152: V_{ix} Definition (Clock) 228
Figure 153: DQS Differential Input Voltage 229

Micron Technology, Inc. reserves the right to change products or specifications without notice.
© 2017 Micron Technology, Inc. All rights reserved.

Figure 154: Definition of Differential DQS Peak Voltage 230
Figure 155: DQS Single-Ended Input Voltage 230
Figure 156: Differential Input Slew Rate Definition for DQS_t, DQS_c 231
Figure 157: V_{ix} Definition (DQS) 232
Figure 158: Single-Ended Output Slew Rate Definition 234
Figure 159: Differential Output Slew Rate Definition 234
Figure 160: Overshoot and Undershoot Definition 235
Figure 161: Driver Output Timing Reference Load 236
Figure 162: LVSTL I/O Cell 236
Figure 163: Pull-Up Calibration 237
Figure 164: ^{t}CMDCKE Timing 260
Figure 165: ^{t}ESCKE Timing 263
Figure 166: CA Receiver (Rx) Mask 266
Figure 167: Across Pin $V_{REF\ (CA)}$ Voltage Variation 266
Figure 168: CA Timings at the DRAM Pins 267
Figure 169: CA ^{t}cIPW and SRIN_cIVW Definition (for Each Input Pulse) 267
Figure 170: CA V_{IHL_AC} Definition (for Each Input Pulse) 267
Figure 171: Read Data Timing Definitions – ^{t}QH and ^{t}DQSQ Across DQ Signals per DQS Group 269
Figure 172: DQ Receiver (Rx) Mask 270
Figure 173: Across Pin V_{REF} DQ Voltage Variation 270
Figure 174: DQ-to-DQS ^{t}DQS2DQ and ^{t}DQDQ 271
Figure 175: DQ ^{t}DIPW and SRIN_dIVW Definition for Each Input Pulse 272
Figure 176: DQ $V_{IHL(AC)}$ Definition (for Each Input Pulse) 272
Figure 177: ^{t}LZ(DQS) Method for Calculating Transitions and Endpoint 287
Figure 178: ^{t}HZ(DQS) Method for Calculating Transitions and Endpoint 288
Figure 179: ^{t}LZ(DQ) Method for Calculating Transitions and Endpoint 289
Figure 180: ^{t}HZ(DQ) Method for Calculating Transitions and Endpoint 289
Figure 181: ODT for CA 295
Figure 182: Functional Representation of DQ ODT 298
Figure 183: Single-Ended Output Slew Rate Definition 302
Figure 184: Differential Output Slew Rate Definition 303
Figure 185: LVSTL I/O Cell 303
Figure 186: Pull-Up Calibration 304

Micron Technology, Inc. reserves the right to change products or specifications without notice.
© 2017 Micron Technology, Inc. All rights reserved.

List of Tables

Table 1: Key Timing Parameters 1
Table 2: Device Configuration 2
Table 3: Ball/Pad Descriptions 22
Table 4: Mode Register Contents 24
Table 5: LPDDR4 I_{DD} Specifications under 3733 Mb/s – Single Die 25
Table 6: LPDDR4 I_{DD} Specifications under 4266 Mb/s – Single Die 26
Table 7: LPDDR4 I_{DD6} Full-Array Self Refresh Current 28
Table 8: LPDDR4X I_{DD} Specifications under 3733 Mb/s – Single Die 29
Table 9: LPDDR4X I_{DD} Specifications under 4266 Mb/s – Single Die 30
Table 10: LPDDR4X I_{DD6} Full-Array Self Refresh Current 32
Table 11: Monolithic Device Addressing – Dual-Channel Die 35
Table 12: Monolithic Device Addressing – Single-Channel Die 36
Table 13: Mode Register Default Settings 39
Table 14: Voltage Ramp Conditions 39
Table 15: Initialization Timing Parameters 41
Table 16: Reset Timing Parameter 42
Table 17: Power Supply Conditions 42
Table 18: Power-Off Timing 43
Table 19: Mode Register Assignments 43
Table 20: MR0 Device Feature 0 (MA[5:0] = 00h) 44
Table 21: MR0 Op-Code Bit Definitions 44
Table 22: MR1 Device Feature 1 (MA[5:0] = 01h) 45
Table 23: MR1 Op-Code Bit Definitions 45
Table 24: Burst Sequence for Read 47
Table 25: Burst Sequence for Write 47
Table 26: MR2 Device Feature 2 (MA[5:0] = 02h) 48
Table 27: MR2 Op-Code Bit Definitions 48
Table 28: Frequency Ranges for RL, WL, *n*WR, and *n*RTP Settings 50
Table 29: MR3 I/O Configuration 1 (MA[5:0] = 03h) 50
Table 30: MR3 Op-Code Bit Definitions 51
Table 31: MR4 Device Temperature (MA[5:0] = 04h) 52
Table 32: MR4 Op-Code Bit Definitions 52
Table 33: MR5 Basic Configuration 1 (MA[5:0] = 05h) 53
Table 34: MR5 Op-Code Bit Definitions 53
Table 35: MR6 Basic Configuration 2 (MA[5:0] = 06h) 53
Table 36: MR6 Op-Code Bit Definitions 53
Table 37: MR7 Basic Configuration 3 (MA[5:0] = 07h) 53
Table 38: MR7 Op-Code Bit Definitions 53
Table 39: MR8 Basic Configuration 4 (MA[5:0] = 08h) 54
Table 40: MR8 Op-Code Bit Definitions 54
Table 41: MR9 Test Mode (MA[5:0] = 09h) 54
Table 42: MR9 Op-Code Definitions 54
Table 43: MR10 Calibration (MA[5:0] = 0Ah) 54
Table 44: MR10 Op-Code Bit Definitions 55
Table 45: MR11 ODT Control (MA[5:0] = 0Bh) 55
Table 46: MR11 Op-Code Bit Definitions 55
Table 47: MR12 Register Information (MA[5:0] = 0Ch) 56
Table 48: MR12 Op-Code Bit Definitions 56
Table 49: MR13 Register Control (MA[5:0] = 0Dh) 56
Table 50: MR13 Op-Code Bit Definition 57

Micron Technology, Inc. reserves the right to change products or specifications without notice.
© 2017 Micron Technology, Inc. All rights reserved.

Table 51: Mode Register 14 (MA[5:0] = 0Eh) ... 58
Table 52: MR14 Op-Code Bit Definition ... 58
Table 53: V_{REF} Setting for Range[0] and Range[1] ... 59
Table 54: MR15 Register Information (MA[5:0] = 0Fh) ... 60
Table 55: MR15 Op-code Bit Definition ... 60
Table 56: MR15 Invert Register Pin Mapping ... 60
Table 57: MR16 PASR Bank Mask (MA[5:0] = 010h) ... 60
Table 58: MR16 Op-Code Bit Definitions ... 60
Table 59: MR17 PASR Segment Mask (MA[5:0] = 11h) ... 61
Table 60: MR17 PASR Segment Mask Definitions ... 61
Table 61: MR17 PASR Segment Mask ... 61
Table 62: MR18 Register Information (MA[5:0] = 12h) ... 62
Table 63: MR18 LSB DQS Oscillator Count ... 62
Table 64: MR19 Register Information (MA[5:0] = 13h) ... 62
Table 65: MR19 DQS Oscillator Count ... 62
Table 66: MR20 Register Information (MA[5:0] = 14h) ... 62
Table 67: MR20 Register Information ... 63
Table 68: MR20 Invert Register Pin Mapping ... 63
Table 69: MR21 Register Information (MA[5:0] = 15h) ... 63
Table 70: MR22 Register Information (MA[5:0] = 16h) ... 63
Table 71: MR22 Register Information ... 64
Table 72: MR23 Register Information (MA[5:0] = 17h) ... 64
Table 73: MR23 Register Information ... 65
Table 74: MR24 Register Information (MA[5:0] = 18h) ... 65
Table 75: MR24 Register Information ... 65
Table 76: MR25 Register Information (MA[5:0] = 19h) ... 66
Table 77: MR25 Register Information ... 66
Table 78: MR26:29 Register Information (MA[5:0] = 1Ah–1Dh) ... 66
Table 79: MR30 Register Information (MA[5:0] = 1Eh) ... 67
Table 80: MR30 Register Information ... 67
Table 81: MR31 Register Information (MA[5:0] = 1Fh) ... 67
Table 82: MR32 Register Information (MA[5:0] = 20h) ... 67
Table 83: MR32 Register Information ... 67
Table 84: MR33:38 Register Information (MA[5:0] = 21h–26h) ... 68
Table 85: MR39 Register Information (MA[5:0] = 27h) ... 68
Table 86: MR39 Register Information ... 68
Table 87: MR40 Register Information (MA[5:0] = 28h) ... 68
Table 88: MR40 Register Information ... 68
Table 89: MR41:47 Register Information (MA[5:0] = 29h–2Fh) ... 69
Table 90: MR48:63 Register Information (MA[5:0] = 30h–3Fh) ... 69
Table 91: Command Truth Table ... 69
Table 92: Reference Voltage for ^{t}LZ(DQS), ^{t}HZ(DQS) Timing Measurements ... 81
Table 93: Reference Voltage for ^{t}LZ(DQ), ^{t}HZ(DQ) Timing Measurements ... 82
Table 94: Method for Calculating ^{t}WPRE Transitions and Endpoints ... 87
Table 95: Reference Voltage for ^{t}WPST Timing Measurements ... 88
Table 96: Same Bank (ODT Disabled) ... 90
Table 97: Different Bank (ODT Disabled) ... 90
Table 98: Same Bank (ODT Enabled) ... 91
Table 99: Different Bank (ODT Enabled) ... 91
Table 100: Function Behavior of DMI Signal During WRITE, MASKED WRITE, and READ Operations ... 92
Table 101: WDQS_On/WDQS_Off Definition ... 97
Table 102: WDQS_On/WDQS_Off Allowable Variation Range ... 97

Micron Technology, Inc. reserves the right to change products or specifications without notice.
© 2017 Micron Technology, Inc. All rights reserved.

Table 103: DQS Turn-Around Parameter 98
Table 104: Precharge Bank Selection 116
Table 105: Timing Between Commands (PRECHARGE and AUTO PRECHARGE): DQ ODT is Disable 120
Table 106: Timing Between Commands (PRECHARGE and AUTO PRECHARGE): DQ ODT is Enable 123
Table 107: Bank and Refresh Counter Increment Behavior 125
Table 108: REFRESH Command Timing Constraints 127
Table 109: Legacy REFRESH Command Timing Constraints 129
Table 110: Modified REFRESH Command Timing Constraints 129
Table 111: Refresh Requirement Parameters 132
Table 112: MRR 151
Table 113: Truth Table for MRR and MRW 156
Table 114: MRR/MRW Timing Constraints: DQ ODT is Disable 156
Table 115: MRR/MRW Timing Constraints: DQ ODT is Enable 157
Table 116: VRCG Enable/Disable Timing 158
Table 117: Internal $V_{REF(CA)}$ Specifications 163
Table 118: Internal $V_{REF(DQ)}$ Specifications 168
Table 119: Mapping MR12 Op Code and DQ Numbers 170
Table 120: Mapping CA Input Pin and DQ Output Pin 172
Table 121: Write Leveling Timing Parameters 178
Table 122: Write Leveling Setup and Hold Timing 178
Table 123: MPC Command Definition 180
Table 124: MPC Commands 181
Table 125: Timing Constraints for Training Commands 183
Table 126: Invert Mask Assignments 185
Table 127: Read DQ Calibration Bit Ordering and Inversion Example 187
Table 128: MR Setting vs. DMI Status 188
Table 129: MPC[WRITE-FIFO] AC Timing 194
Table 130: DQS Oscillator Matching Error Specification 196
Table 131: DQS Interval Oscillator AC Timing 198
Table 132: Temperature Sensor 200
Table 133: ZQ Calibration Parameters 201
Table 134: Mode Register Function With Two Physical Registers 203
Table 135: Relation Between MR Setting and DRAM Operation 204
Table 136: Frequency Set Point AC Timing 205
Table 137: ^{t}FC Value Mapping 205
Table 138: ^{t}FC Value Mapping: Example 206
Table 139: Pull-Down Driver Characteristics – ZQ Calibration 208
Table 140: Pull-Up Characteristics – ZQ Calibration 208
Table 141: Valid Calibration Points 208
Table 142: Command Bus ODT State 210
Table 143: ODT DC Electrical Characteristics for Command/Address Bus 210
Table 144: ODT DC Electrical Characteristics for DQ Bus 212
Table 145: Output Driver and Termination Register Sensitivity Definition 213
Table 146: Output Driver and Termination Register Temperature and Voltage Sensitivity 213
Table 147: $ODTL_{ON}$ and $ODTL_{OFF}$ Latency Values 215
Table 148: Termination State in Write Leveling Mode 216
Table 149: Post-Package Repair Timing Parameters 220
Table 150: Absolute Maximum DC Ratings 222
Table 151: Recommended DC Operating Conditions 222
Table 152: Input Leakage Current 222
Table 153: Input/Output Leakage Current 223
Table 154: Operating Temperature Range 223

Micron Technology, Inc. reserves the right to change products or specifications without notice.
© 2017 Micron Technology, Inc. All rights reserved.

Table 155: Input Levels 224
Table 156: Input Levels 224
Table 157: CK Differential Input Voltage 225
Table 158: Clock Single-Ended Input Voltage 227
Table 159: Differential Input Slew Rate Definition for CK_t, CK_c 227
Table 160: Differential Input Level for CK_t, CK_c 228
Table 161: Differential Input Slew Rate for CK_t, CK_c 228
Table 162: Cross-Point Voltage for Differential Input Signals (Clock) 229
Table 163: DQS Differential Input Voltage 229
Table 164: DQS Single-Ended Input Voltage 231
Table 165: Differential Input Slew Rate Definition for DQS_t, DQS_c 231
Table 166: Differential Input Level for DQS_t, DQS_c 232
Table 167: Differential Input Slew Rate for DQS_t, DQS_c 232
Table 168: Cross-Point Voltage for Differential Input Signals (DQS) 233
Table 169: Input Levels for ODT_CA 233
Table 170: Single-Ended Output Slew Rate 233
Table 171: Differential Output Slew Rate 234
Table 172: AC Overshoot/Undershoot Specifications 235
Table 173: Overshoot/Undershoot Specification for CKE and RESET 235
Table 174: Input/Output Capacitance 237
Table 175: I_{DD} Measurement Conditions 238
Table 176: CA Pattern for I_{DD4R} for BL = 16 238
Table 177: CA Pattern for I_{DD4W} for BL = 16 239
Table 178: Data Pattern for I_{DD4W} (DBI Off) for BL = 16 239
Table 179: Data Pattern for I_{DD4R} (DBI Off) for BL = 16 240
Table 180: Data Pattern for I_{DD4W} (DBI On) for BL = 16 242
Table 181: Data Pattern for I_{DD4R} (DBI On) for BL = 16 243
Table 182: CA Pattern for I_{DD4R} for BL = 32 244
Table 183: CA Pattern for I_{DD4W} for BL = 32 245
Table 184: Data Pattern for I_{DD4W} (DBI Off) for BL = 32 246
Table 185: Data Pattern for I_{DD4R} (DBI Off) for BL = 32 247
Table 186: Data Pattern for I_{DD4W} (DBI On) for BL = 32 249
Table 187: Data Pattern for I_{DD4R} (DBI On) for BL = 32 251
Table 188: I_{DD} Specification Parameters and Operating Conditions 254
Table 189: Clock Timing 256
Table 190: Read Output Timing 256
Table 191: Write Timing 258
Table 192: CKE Input Timing 259
Table 193: Command Address Input Timing 260
Table 194: Boot Timing Parameters (10–55 MHz) 261
Table 195: Mode Register Timing Parameters 261
Table 196: Core Timing Parameters 261
Table 197: CA Bus ODT Timing 263
Table 198: CA Bus Training Parameters 263
Table 199: Asynchronous ODT Turn On and Turn Off Timing 264
Table 200: Temperature Derating Parameters 264
Table 201: DRAM CMD/ADR, CS 268
Table 202: DQs In Receive Mode 272
Table 203: Definitions and Calculations 273
Table 204: ^{t}CK(abs), ^{t}CH(abs), and ^{t}CL(abs) Definitions 274
Table 205: Mode Register Default Settings 277
Table 206: Mode Register Assignments 278

Micron Technology, Inc. reserves the right to change products or specifications without notice.
© 2017 Micron Technology, Inc. All rights reserved.

Table 207: MR0 Device Feature 0 (MA[5:0] = 00h) 279
Table 208: MR0 Op-Code Bit Definitions 279
Table 209: MR3 I/O Configuration 1 (MA[5:0] = 03h) 280
Table 210: MR3 Op-Code Bit Definitions 281
Table 211: MR12 Register Information (MA[5:0] = 0Ch) 282
Table 212: MR12 Op-Code Bit Definitions 282
Table 213: Mode Register 14 (MA[5:0] = 0Eh) 282
Table 214: MR14 Op-Code Bit Definition 283
Table 215: V_{REF} Setting for Range[0] and Range[1] 284
Table 216: MR22 Register Information (MA[5:0] = 16h) 285
Table 217: MR22 Register Information 285
Table 218: Reference Voltage for ^{t}LZ(DQS), ^{t}HZ(DQS) Timing Measurements 288
Table 219: Reference Voltage for ^{t}LZ(DQ), ^{t}HZ(DQ) Timing Measurements 290
Table 220: Internal $V_{REF(CA)}$ Specifications 291
Table 221: Internal $V_{REF(DQ)}$ Specifications 292
Table 222: Pull-Down Driver Characteristics – ZQ Calibration 294
Table 223: Pull-Up Characteristics – ZQ Calibration 294
Table 224: Terminated Valid Calibration Points 294
Table 225: Command Bus ODT State 295
Table 226: ODT DC Electrical Characteristics for Command/Address Bus – up to 3200 Mb/s 296
Table 227: ODT DC Electrical Characteristics for Command/Address Bus – Beyond 3200 Mb/s 297
Table 228: ODT DC Electrical Characteristics for DQ Bus– up to 3200 Mb/s 298
Table 229: ODT DC Electrical Characteristics for DQ Bus – Beyond 3200 Mb/s 299
Table 230: Output Driver and Termination Register Sensitivity Definition 300
Table 231: Output Driver and Termination Register Temperature and Voltage Sensitivity 300
Table 232: Recommended DC Operating Conditions 301
Table 233: Single-Ended Output Slew Rate 301
Table 234: Differential Output Slew Rate 302

Micron Technology, Inc. reserves the right to change products or specifications without notice.
© 2017 Micron Technology, Inc. All rights reserved.

Important Notes and Warnings

Micron Technology, Inc. ("Micron") reserves the right to make changes to information published in this document, including without limitation specifications and product descriptions. This document supersedes and replaces all information supplied prior to the publication hereof. You may not rely on any information set forth in this document if you obtain the product described herein from any unauthorized distributor or other source not authorized by Micron.

Automotive Applications. Products are not designed or intended for use in automotive applications unless specifically designated by Micron as automotive-grade by their respective data sheets. Distributor and customer/distributor shall assume the sole risk and liability for and shall indemnify and hold Micron harmless against all claims, costs, damages, and expenses and reasonable attorneys' fees arising out of, directly or indirectly, any claim of product liability, personal injury, death, or property damage resulting directly or indirectly from any use of non-automotive-grade products in automotive applications. Customer/distributor shall ensure that the terms and conditions of sale between customer/distributor and any customer of distributor/customer (1) state that Micron products are not designed or intended for use in automotive applications unless specifically designated by Micron as automotive-grade by their respective data sheets and (2) require such customer of distributor/customer to indemnify and hold Micron harmless against all claims, costs, damages, and expenses and reasonable attorneys' fees arising out of, directly or indirectly, any claim of product liability, personal injury, death, or property damage resulting from any use of non-automotive-grade products in automotive applications.

Critical Applications. Products are not authorized for use in applications in which failure of the Micron component could result, directly or indirectly in death, personal injury, or severe property or environmental damage ("Critical Applications"). Customer must protect against death, personal injury, and severe property and environmental damage by incorporating safety design measures into customer's applications to ensure that failure of the Micron component will not result in such harms. Should customer or distributor purchase, use, or sell any Micron component for any critical application, customer and distributor shall indemnify and hold harmless Micron and its subsidiaries, subcontractors, and affiliates and the directors, officers, and employees of each against all claims, costs, damages, and expenses and reasonable attorneys' fees arising out of, directly or indirectly, any claim of product liability, personal injury, or death arising in any way out of such critical application, whether or not Micron or its subsidiaries, subcontractors, or affiliates were negligent in the design, manufacture, or warning of the Micron product.

Customer Responsibility. Customers are responsible for the design, manufacture, and operation of their systems, applications, and products using Micron products. ALL SEMICONDUCTOR PRODUCTS HAVE INHERENT FAILURE RATES AND LIMITED USEFUL LIVES. IT IS THE CUSTOMER'S SOLE RESPONSIBILITY TO DETERMINE WHETHER THE MICRON PRODUCT IS SUITABLE AND FIT FOR THE CUSTOMER'S SYSTEM, APPLICATION, OR PRODUCT. Customers must ensure that adequate design, manufacturing, and operating safeguards are included in customer's applications and products to eliminate the risk that personal injury, death, or severe property or environmental damages will result from failure of any semiconductor component.

Limited Warranty. In no event shall Micron be liable for any indirect, incidental, punitive, special or consequential damages (including without limitation lost profits, lost savings, business interruption, costs related to the removal or replacement of any products or rework charges) whether or not such damages are based on tort, warranty, breach of contract or other legal theory, unless explicitly stated in a written agreement executed by Micron's duly authorized representative.

Micron Technology, Inc. reserves the right to change products or specifications without notice.
© 2017 Micron Technology, Inc. All rights reserved.

General Description

The 4Gb Mobile Low-Power DDR4 SDRAM with low V_{DDQ} (LPDDR4X) is a high-speed CMOS, dynamic random-access memory. The device is internally configured with x16 I/O, 8-banks.

Each of the x16's 536,870,912-bit banks is organized as 32,768 rows by 1024 columns by 16 bits.

General Notes

Throughout the data sheet, figures and text refer to DQs as "DQ." DQ should be interpreted as any or all DQ collectively, unless specifically stated otherwise.

"DQS" and "CK" should be interpreted as DQS_t, DQS_c and CK_t, CK_c respectively, unless specifically stated otherwise. "CA" includes all CA pins used for a given density.

In timing diagrams, "CMD" is used as an indicator only. Actual signals occur on CA[5:0]. V_{REF} indicates $V_{REF(CA)}$ and $V_{REF(DQ)}$.

Complete functionality may be described throughout the entire document. Any page or diagram may have been simplified to convey a topic and may not be inclusive of all requirements.

Any specific requirement takes precedence over a general statement.

Any functionality not specifically stated herein is considered undefined, illegal, is not supported, and will result in unknown operation.

Micron Technology, Inc. reserves the right to change products or specifications without notice.
© 2017 Micron Technology, Inc. All rights reserved.

Package Block Diagrams

Figure 2: Single-Die, Single-Channel, Single-Rank Package Block Diagram (x16 I/O)

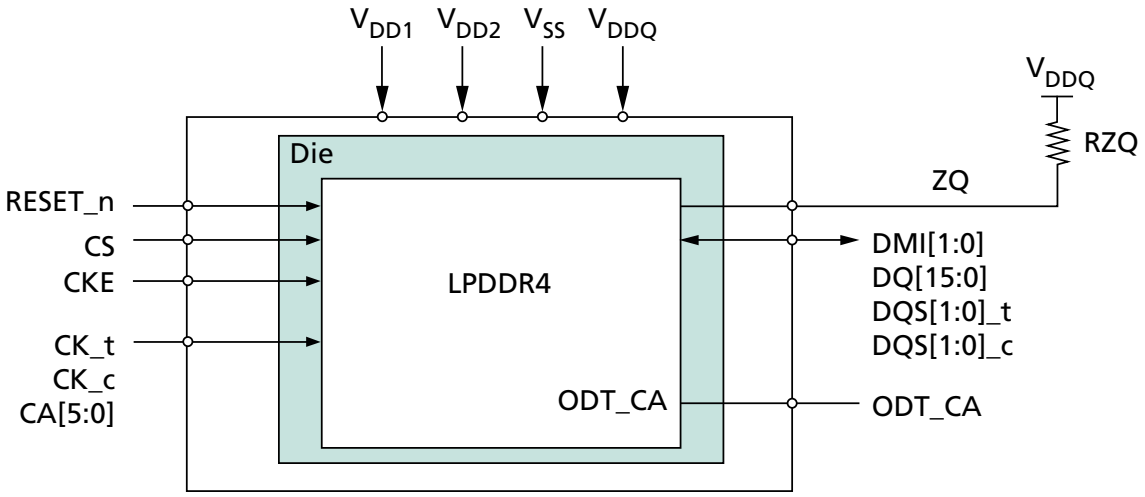

Figure 3: Dual-Die, Dual-Channel, Single-Rank Package Block Diagram (x32 I/O)

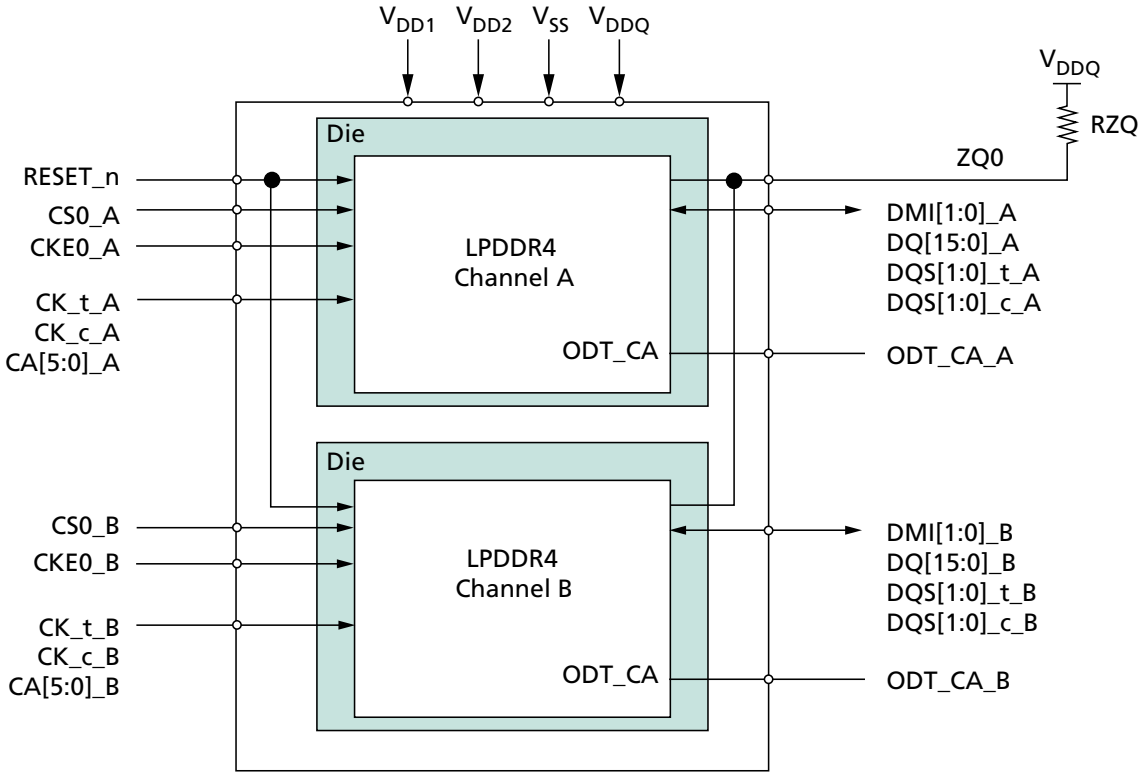

Micron Technology, Inc. reserves the right to change products or specifications without notice.
© 2017 Micron Technology, Inc. All rights reserved.

Ball Assignments and Descriptions

Figure 4: 200-Ball Single-Channel, Single-Rank Discrete FBGA (x16 I/O)

	1	2	3	4	5	6	7	8	9	10	11	12
A	DNU	DNU	V_{SS}	V_{DD2}	ZQ			NC	V_{DD2}	V_{SS}	DNU	DNU
B	DNU	DQ0	V_{DDQ}	DQ7	V_{DDQ}			V_{DDQ}	DQ15	V_{DDQ}	DQ8	DNU
C	V_{SS}	DQ1	DMI0	DQ6	V_{SS}			V_{SS}	DQ14	DMI1	DQ9	V_{SS}
D	V_{DDQ}	V_{SS}	DQS0_t	V_{SS}	V_{DDQ}			V_{DDQ}	V_{SS}	DQS1_t	V_{SS}	V_{DDQ}
E	V_{SS}	DQ2	DQS0_c	DQ5	V_{SS}			V_{SS}	DQ13	DQS1_c	DQ10	V_{SS}
F	V_{DD1}	DQ3	V_{DDQ}	DQ4	V_{DD2}			V_{DD2}	DQ12	V_{DDQ}	DQ11	V_{DD1}
G	V_{SS}	ODT_CA	V_{SS}	V_{DD1}	V_{SS}			V_{SS}	V_{DD1}	V_{SS}	NC	V_{SS}
H	V_{DD2}	CA0	NC	CS	V_{DD2}			V_{DD2}	CA2	CA3	CA4	V_{DD2}
J	V_{SS}	CA1	V_{SS}	CKE	NC			CK_t	CK_c	V_{SS}	CA5	V_{SS}
K	V_{DD2}	V_{SS}	V_{DD2}	V_{SS}	NC			NC	V_{SS}	V_{DD2}	V_{SS}	V_{DD2}
L												
M												
N	V_{DD2}	V_{SS}	V_{DD2}	V_{SS}	NC			NC	V_{SS}	V_{DD2}	V_{SS}	V_{DD2}
P	V_{SS}	NC	V_{SS}	NC	NC			NC	NC	V_{SS}	NC	V_{SS}
R	V_{DD2}	NC	NC	NC	V_{DD2}			V_{DD2}	NC	NC	NC	V_{DD2}
T	V_{SS}	NC	V_{SS}	V_{DD1}	V_{SS}			V_{SS}	V_{DD1}	V_{SS}	RESET_n	V_{SS}
U	V_{DD1}	NC	V_{DDQ}	NC	V_{DD2}			V_{DD2}	NC	V_{DDQ}	NC	V_{DD1}
V	V_{SS}	NC	NC	NC	V_{SS}			V_{SS}	NC	NC	NC	V_{SS}
W	V_{DDQ}	V_{SS}	NC	V_{SS}	V_{DDQ}			V_{DDQ}	V_{SS}	NC	V_{SS}	V_{DDQ}
Y	V_{SS}	NC	NC	NC	V_{SS}			V_{SS}	NC	NC	NC	V_{SS}
AA	DNU	NC	V_{DDQ}	NC	V_{DDQ}			V_{DDQ}	NC	V_{DDQ}	NC	DNU
AB	DNU	DNU	V_{SS}	V_{DD2}	V_{SS}			V_{SS}	V_{DD2}	V_{SS}	DNU	DNU
	1	2	3	4	5	6	7	8	9	10	11	12

Top View (ball down)

LPDDR4 | ZQ, ODT_CA, RESET | Supply | Ground

Micron Technology, Inc. reserves the right to change products or specifications without notice.
© 2017 Micron Technology, Inc. All rights reserved.

Figure 5: 200-Ball Dual-Channel, Single-Rank Discrete FBGA (x32 I/O)

	1	2	3	4	5	6	7	8	9	10	11	12
A	DNU	DNU	V_{SS}	V_{DD2}	ZQ0			NC	V_{DD2}	V_{SS}	DNU	DNU
B	DNU	DQ0_A	V_{DDQ}	DQ7_A	V_{DDQ}			V_{DDQ}	DQ15_A	V_{DDQ}	DQ8_A	DNU
C	V_{SS}	DQ1_A	DMI0_A	DQ6_A	V_{SS}			V_{SS}	DQ14_A	DMI1_A	DQ9_A	V_{SS}
D	V_{DDQ}	V_{SS}	DQS0_t_A	V_{SS}	V_{DDQ}			V_{DDQ}	V_{SS}	DQS1_t_A	V_{SS}	V_{DDQ}
E	V_{SS}	DQ2_A	DQS0_c_A	DQ5_A	V_{SS}			V_{SS}	DQ13_A	DQS1_c_A	DQ10_A	V_{SS}
F	V_{DD1}	DQ3_A	V_{DDQ}	DQ4_A	V_{DD2}			V_{DD2}	DQ12_A	V_{DDQ}	DQ11_A	V_{DD1}
G	V_{SS}	ODT_CA_A	V_{SS}	V_{DD1}	V_{SS}			V_{SS}	V_{DD1}	V_{SS}	NC	V_{SS}
H	V_{DD2}	CA0_A	NC	CS0_A	V_{DD2}			V_{DD2}	CA2_A	CA3_A	CA4_A	V_{DD2}
J	V_{SS}	CA1_A	V_{SS}	CKE0_A	NC			CK_t_A	CK_c_A	V_{SS}	CA5_A	V_{SS}
K	V_{DD2}	V_{SS}	V_{DD2}	V_{SS}	NC			NC	V_{SS}	V_{DD2}	V_{SS}	V_{DD2}
L												
M												
N	V_{DD2}	V_{SS}	V_{DD2}	V_{SS}	NC			NC	V_{SS}	V_{DD2}	V_{SS}	V_{DD2}
P	V_{SS}	CA1_B	V_{SS}	CKE0_B	NC			CK_t_B	CK_c_B	V_{SS}	CA5_B	V_{SS}
R	V_{DD2}	CA0_B	NC	CS0_B	V_{DD2}			V_{DD2}	CA2_B	CA3_B	CA4_B	V_{DD2}
T	V_{SS}	ODT_CA_B	V_{SS}	V_{DD1}	V_{SS}			V_{SS}	V_{DD1}	V_{SS}	RESET_n	V_{SS}
U	V_{DD1}	DQ3_B	V_{DDQ}	DQ4_B	V_{DD2}			V_{DD2}	DQ12_B	V_{DDQ}	DQ11_B	V_{DD1}
V	V_{SS}	DQ2_B	DQS0_c_B	DQ5_B	V_{SS}			V_{SS}	DQ13_B	DQS1_c_B	DQ10_B	V_{SS}
W	V_{DDQ}	V_{SS}	DQS0_t_B	V_{SS}	V_{DDQ}			V_{DDQ}	V_{SS}	DQS1_t_B	V_{SS}	V_{DDQ}
Y	V_{SS}	DQ1_B	DMI0_B	DQ6_B	V_{SS}			V_{SS}	DQ14_B	DMI1_B	DQ9_B	V_{SS}
AA	DNU	DQ0_B	V_{DDQ}	DQ7_B	V_{DDQ}			V_{DDQ}	DQ15_B	V_{DDQ}	DQ8_B	DNU
AB	DNU	DNU	V_{SS}	V_{DD2}	V_{SS}			V_{SS}	V_{DD2}	V_{SS}	DNU	DNU
	1	2	3	4	5	6	7	8	9	10	11	12

Top View (ball down)

LPDDR4_A (Channel A) | LPDDR4_B (Channel B) | ZQ, ODT_CA, RESET | Supply | Ground

Micron Technology, Inc. reserves the right to change products or specifications without notice.
© 2017 Micron Technology, Inc. All rights reserved.

Table 3: Ball/Pad Descriptions

Symbol	Type	Description
CK_t_A, CK_c_A, CK_t_B, CK_c_B	Input	**Clock:** CK_t and CK_c are differential clock inputs. All address, command and control input signals are sampled on positive edge of CK_t and the negative edge of CK_c. AC timings for CA parameters are referenced to clock. Each channel (A, B) has its own clock pair.
CKE0_A, CKE0_B	Input	**Clock enable:** CKE HIGH activates and CKE LOW deactivates the internal clock signals, input buffers, and output drivers. Power-saving modes are entered and exited via CKE transitions. CKE is sampled at the rising edge of CK.
CS0_A, CS0_B	Input	**Chip select:** Each channel (A, B) has its own CS signals.
CA[5:0]_A, CA[5:0]_B	Input	**Command/Address inputs:** Provide the command and address inputs according to the command truth table. Each channel (A, B) has its own CA signals.
ODT_CA_A, ODT_CA_B	Input	**LPDDR4 CA ODT control:** The ODT_CA pin is used in conjunction with the mode register to turn on/off the on-die termination for CA pins. It is bonded to V_{DD2} within the package, or at the package ball, for the terminating rank, and the non-terminating ranks are bonded to V_{SS} (or left floating with a weak pull-down on the DRAM die). The terminating rank is the DRAM that terminates the CA bus for all die on the same channel. **LPDDR4X CA ODT control:** The ODT_CA pin is ignored by LPDDR4X devices. CA ODT is fully controlled through MR11 and MR22. The ODT_CA pin shall be connected to a valid logic level.
DQ[15:0]_A, DQ[15:0]_B	I/O	**Data input/output:** Bidirectional data bus.
DQS[1:0]_t_A, DQS[1:0]_c_A, DQS[1:0]_t_B, DQS[1:0]_c_B	I/O	**Data strobe:** DQS_t and DQS_c are bi-directional differential output clock signals used to strobe data during a READ or WRITE. The data strobe is generated by the DRAM for a READ and is edge-aligned with data. The data strobe is generated by the SoC memory controller for a WRITE and is trained to precede data. Each byte of data has a data strobe signal pair. Each channel (A, B) has its own DQS_t and DQS_c strobes.
DMI[1:0]_A, DMI[1:0]_B	I/O	**Data mask/Data bus inversion:** Data mask inversion (DMI) is a dual use bi-directional signal used to indicate data to be masked, and data which is inverted on the bus. For data bus inversion (DBI), the DMI signal is driven HIGH when the data on the data bus is inverted, or driven LOW when the data is in its normal state. DBI can be disabled via a mode register setting. For data mask, the DMI signal is used in combination with the data lines to indicate data to be masked in a MASK WRITE command (see the Data Mask (DM) and Data Bus Inversion (DBI) sections for details). The data mask function can be disabled via a mode register setting. Each byte of data has a DMI signal. Each channel has its own DMI signals.
ZQ0	Reference	**ZQ calibration reference:** Used to calibrate the output drive strength and the termination resistance. The ZQ pin shall be connected to V_{DDQ} through a 240Ω ±1% resistor.
V_{DDQ}, V_{DD1}, V_{DD2}	Supply	**Power supplies:** Isolated on the die for improved noise immunity.
V_{SS}	Supply	**Ground reference:** Power supply ground reference.
RESET_n	Input	**RESET:** When asserted LOW, the RESET pin resets all channels of the die.
DNU	–	**Do not use:** Must be grounded or left floating.
NC	–	**No connect:** Not internally connected.

Micron Technology, Inc. reserves the right to change products or specifications without notice.
© 2017 Micron Technology, Inc. All rights reserved.

Package Dimensions

Figure 6: 200-Ball WFBGA – 10mm x 14.5mm (Package Code: DS)

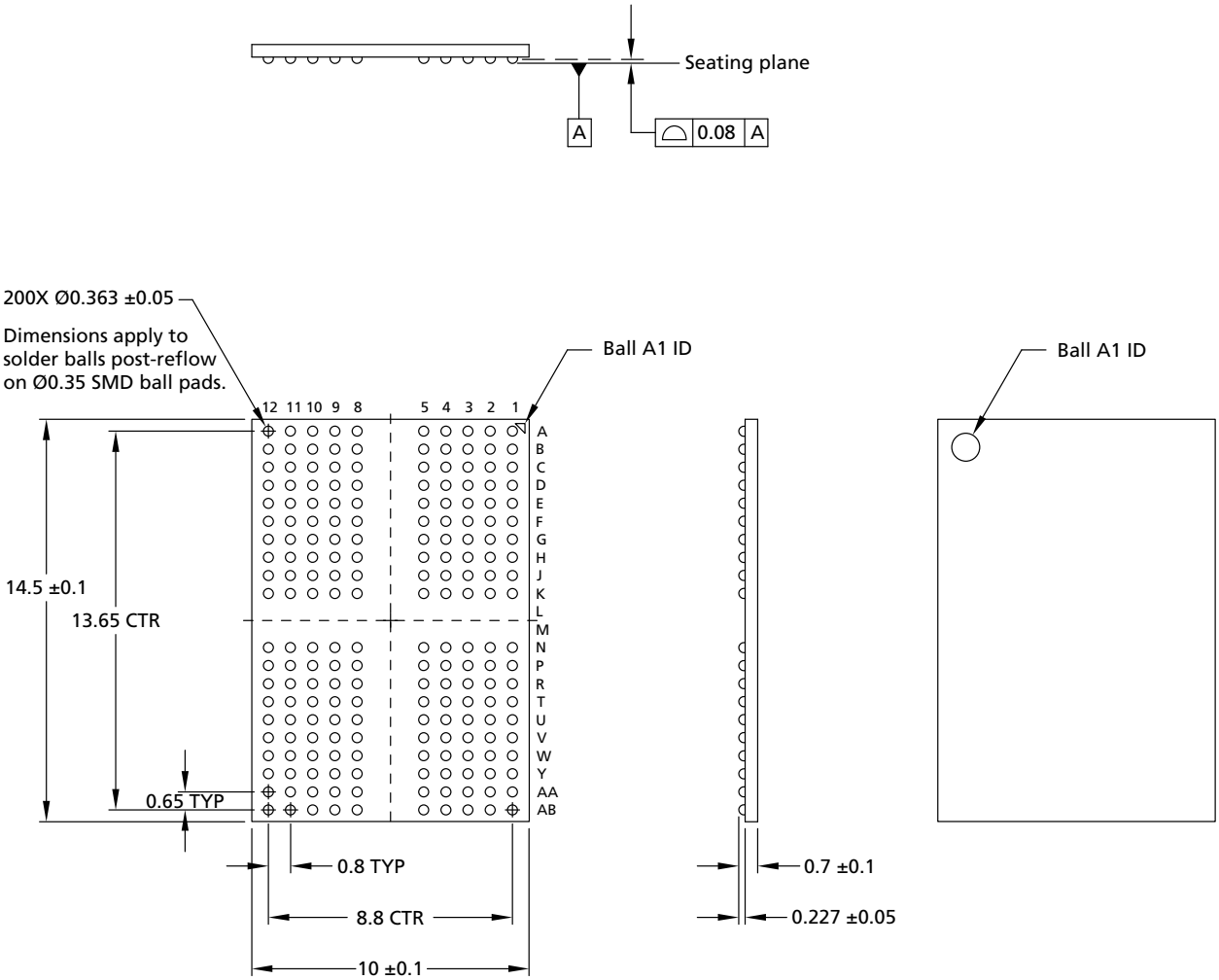

Notes: 1. All dimensions are in millimeters.
2. Solder ball composition: SAC302 with NiAu pads (96.8% Sn, 3.0% Ag, 0.2% Cu).

Micron Technology, Inc. reserves the right to change products or specifications without notice.
© 2017 Micron Technology, Inc. All rights reserved.

MR0, MR[6:5], MR8, MR13, MR24 Definition

Table 4: Mode Register Contents

Mode Register	OP7	OP6	OP5	OP4	OP3	OP2	OP1	OP0
MR0							**Latency Mode**	**REF**
	OP[0] = 0b: Both legacy and modified refresh mode supported OP[1] = 0b: Device supports normal latency							
MR5	**Manufacturer ID**							
	1111 1111b : Micron							
MR6	**Revision ID1**							
	0000 0011b							
MR8	**I/O Width**		**Density**					
	OP[7:6] = 00b: x16/channel		OP[5:2] = 0010b: 4Gb single channel die					
MR13						**VRO**		
	OP[2] = 0b: Normal operation (default) 1b: Output the $V_{REF(CA)}$ value on DQ7 and $V_{REF(DQ)}$ value on DQ6							
MR24	**TRR Mode**				**Unlimited MAC**	**MAC Value**		
	OP[3:0] = 1000b: Unlimited MAC OP[7] = 0b: Disable (default) 1b: Reserved							

Notes:
1. The contents of MR0, MR[6:5], MR8, MR13, and MR24 will reflect information specific to each die in these packages.
2. Other bits not defined above and other mode registers are referred to Mode Register Assignments and Definitions section.

Micron Technology, Inc. reserves the right to change products or specifications without notice.
© 2017 Micron Technology, Inc. All rights reserved.

LPDDR4 I_{DD} Parameters

Refer to LPDDR4 I_{DD} Specification Parameters and Test Conditions section for detailed conditions.

Table 5: LPDDR4 I_{DD} Specifications under 3733 Mb/s – Single Die

V_{DD2}, V_{DDQ} = 1.06–1.17V; V_{DD1} = 1.70–1.95V

Parameter	Supply	T_C/3733 Mb/s			Unit	Note
		95°C	105°C	125°C		
I_{DD01}	V_{DD1}	3.2	3.2	3.8	mA	
I_{DD02}	V_{DD2}	40.0	40.0	45.2		
I_{DD0Q}	V_{DDQ}	0.80	0.80	1.0		
I_{DD2P1}	V_{DD1}	1.4	1.4	1.9	mA	
I_{DD2P2}	V_{DD2}	2.6	2.6	3.4		
I_{DD2PQ}	V_{DDQ}	0.80	0.80	1.2		
I_{DD2PS1}	V_{DD1}	1.4	1.4	1.9	mA	
I_{DD2PS2}	V_{DD2}	2.6	2.6	3.4		
I_{DD2PSQ}	V_{DDQ}	0.80	0.80	1.2		
I_{DD2N1}	V_{DD1}	1.4	1.4	2.0	mA	
I_{DD2N2}	V_{DD2}	22.8	25.0	30.4		
I_{DD2NQ}	V_{DDQ}	0.80	0.80	1.0		
I_{DD2NS1}	V_{DD1}	1.4	1.4	2.0	mA	
I_{DD2NS2}	V_{DD2}	18.0	18.0	23.2		
I_{DD2NSQ}	V_{DDQ}	0.80	0.80	1.0		
I_{DD3P1}	V_{DD1}	1.4	1.4	2.0	mA	
I_{DD3P2}	V_{DD2}	13.0	13.0	18.5		
I_{DD3PQ}	V_{DDQ}	0.80	0.80	1.2		
I_{DD3PS1}	V_{DD1}	1.4	1.4	2.0	mA	
I_{DD3PS2}	V_{DD2}	13.0	13.0	18.5		
I_{DD3PSQ}	V_{DDQ}	0.80	0.80	1.2		
I_{DD3N1}	V_{DD1}	1.7	1.7	2.2	mA	
I_{DD3N2}	V_{DD2}	27.3	28.0	34.9		
I_{DD3NQ}	V_{DDQ}	0.80	0.80	1.0		
I_{DD3NS1}	V_{DD1}	1.7	1.7	2.2	mA	
I_{DD3NS2}	V_{DD2}	21.4	22.0	27.5		
I_{DD3NSQ}	V_{DDQ}	0.80	0.80	1.0		
I_{DD4R1}	V_{DD1}	2.1	2.1	2.5	mA	2, 3
I_{DD4R2}	V_{DD2}	322	330	342		
I_{DD4RQ}	V_{DDQ}	137	137	139		
I_{DD4W1}	V_{DD1}	2.1	2.1	2.5	mA	3
I_{DD4W2}	V_{DD2}	272	280	292		
I_{DD4WQ}	V_{DDQ}	0.80	0.80	0.90		

Micron Technology, Inc. reserves the right to change products or specifications without notice.
© 2017 Micron Technology, Inc. All rights reserved.

Table 5: LPDDR4 I_{DD} Specifications under 3733 Mb/s – Single Die (Continued)

V_{DD2}, V_{DDQ} = 1.06–1.17V; V_{DD1} = 1.70–1.95V

Parameter	Supply	T_C/3733 Mb/s			Unit	Note
		95°C	105°C	125°C		
I_{DD51}	V_{DD1}	10.0	10.0	11.2	mA	
I_{DD52}	V_{DD2}	76.0	76.0	83.0		
I_{DD5Q}	V_{DDQ}	0.80	0.80	1.0		
I_{DD5AB1}	V_{DD1}	4.2	4.2	5.8	mA	
I_{DD5AB2}	V_{DD2}	40.0	40.0	47.1		
I_{DD5ABQ}	V_{DDQ5}	0.80	0.80	1.0		
I_{DD5PB1}	V_{DD1}	4.2	4.2	5.8	mA	
I_{DD5PB2}	V_{DD2}	40.0	40.0	47.4		
I_{DD5PBQ}	V_{DDQ}	0.80	0.80	1.0		

Notes:
1. Published I_{DD} values except I_{DD4RQ} are the maximum of the distribution of the arithmetic mean. Refer to the following note for I_{DD4RQ}; refer to I_{DD6} Full-Array Self Refresh Current table for I_{DD6}.
2. I_{DD4RQ} value is reference only. Typical value. DBI disabled, V_{OH} = V_{DDQ}/3, T_C = 25°C.
3. Measurement conditions of I_{DD4R} and I_{DD4W} values: DBI disabled, BL = 16.

Table 6: LPDDR4 I_{DD} Specifications under 4266 Mb/s – Single Die

V_{DD2}, V_{DDQ} = 1.06–1.17V; V_{DD1} = 1.70–1.95V

Parameter	Supply	T_C/4266 Mb/s			Unit	Note
		95°C	105°C	125°C		
I_{DD01}	V_{DD1}	3.2	3.2	3.8	mA	
I_{DD02}	V_{DD2}	42.0	42.0	47.5		
I_{DD0Q}	V_{DDQ}	0.80	0.80	1.0		
I_{DD2P1}	V_{DD1}	1.4	1.4	1.9	mA	
I_{DD2P2}	V_{DD2}	2.6	2.6	3.4		
I_{DD2PQ}	V_{DDQ}	0.80	0.80	1.2		
I_{DD2PS1}	V_{DD1}	1.4	1.4	1.9	mA	
I_{DD2PS2}	V_{DD2}	2.6	2.6	3.4		
I_{DD2PSQ}	V_{DDQ}	0.80	0.80	1.2		
I_{DD2N1}	V_{DD1}	1.4	1.4	2.0	mA	
I_{DD2N2}	V_{DD2}	23.8	26.0	31.7		
I_{DD2NQ}	V_{DDQ}	0.80	0.80	1.0		
I_{DD2NS1}	V_{DD1}	1.4	1.4	2.0	mA	
I_{DD2NS2}	V_{DD2}	18.0	18.0	23.2		
I_{DD2NSQ}	V_{DDQ}	0.80	0.80	1.0		
I_{DD3P1}	V_{DD1}	1.4	1.4	2.0	mA	
I_{DD3P2}	V_{DD2}	13.0	13.0	18.5		
I_{DD3PQ}	V_{DDQ}	0.80	0.80	1.2		

Micron Technology, Inc. reserves the right to change products or specifications without notice.
© 2017 Micron Technology, Inc. All rights reserved.

Table 6: LPDDR4 I_{DD} Specifications under 4266 Mb/s – Single Die (Continued)

V_{DD2}, V_{DDQ} = 1.06–1.17V; V_{DD1} = 1.70–1.95V

Parameter	Supply	T_C/4266 Mb/s			Unit	Note
		95°C	105°C	125°C		
I_{DD3PS1}	V_{DD1}	1.4	1.4	2.0	mA	
I_{DD3PS2}	V_{DD2}	13.0	13.0	18.5		
I_{DD3PSQ}	V_{DDQ}	0.80	0.80	1.2		
I_{DD3N1}	V_{DD1}	1.7	1.7	2.2	mA	
I_{DD3N2}	V_{DD2}	28.3	29.0	36.2		
I_{DD3NQ}	V_{DDQ}	0.80	0.80	1.0		
I_{DD3NS1}	V_{DD1}	1.7	1.7	2.2	mA	
I_{DD3NS2}	V_{DD2}	21.4	22.0	27.5		
I_{DD3NSQ}	V_{DDQ}	0.80	0.80	1.0		
I_{DD4R1}	V_{DD1}	2.2	2.2	2.7	mA	2, 3
I_{DD4R2}	V_{DD2}	366	375	389		
I_{DD4RQ}	V_{DDQ}	152	152	155		
I_{DD4W1}	V_{DD1}	2.2	2.2	2.7	mA	3
I_{DD4W2}	V_{DD2}	296	305	319		
I_{DD4WQ}	V_{DDQ}	0.80	0.80	0.90		
I_{DD51}	V_{DD1}	10.5	10.5	11.8	mA	
I_{DD52}	V_{DD2}	80.0	80.0	87.4		
I_{DD5Q}	V_{DDQ}	0.80	0.80	1.0		
I_{DD5AB1}	V_{DD1}	4.2	4.2	5.8	mA	
I_{DD5AB2}	V_{DD2}	45.0	45.0	53.0		
I_{DD5ABQ}	V_{DDQ5}	0.80	0.80	1.0		
I_{DD5PB1}	V_{DD1}	4.2	4.2	5.8	mA	
I_{DD5PB2}	V_{DD2}	45.0	45.0	53.4		
I_{DD5PBQ}	V_{DDQ}	0.80	0.80	1.0		

Notes:
1. Published I_{DD} values except I_{DD4RQ} are the maximum of the distribution of the arithmetic mean. Refer to the following note for I_{DD4RQ}; refer to I_{DD6} Full-Array Self Refresh Current table for I_{DD6}.
2. I_{DD4RQ} value is reference only. Typical value. DBI disabled, V_{OH} = V_{DDQ}/3, T_C = 25°C.
3. Measurement conditions of I_{DD4R} and I_{DD4W} values: DBI disabled, BL = 16.

Micron Technology, Inc. reserves the right to change products or specifications without notice.
© 2017 Micron Technology, Inc. All rights reserved.

Table 7: LPDDR4 I_{DD6} Full-Array Self Refresh Current

V_{DD2}, V_{DDQ} = 1.06–1.17V; V_{DD1} = 1.70–1.95V

Temperature	Supply	Self Refresh Current/3733 Mb/s and 4266 Mb/s				Unit
		Full-Array	1/2-Array	1/4-Array	1/8-Array	
25°C	V_{DD1}	0.10	0.10	0.10	0.10	mA
	V_{DD2}	0.30	0.30	0.30	0.30	
	V_{DDQ}	0.01	0.01	0.01	0.01	
95°C	V_{DD1}	2.5	2.0	2.0	2.0	
	V_{DD2}	8.4	6.3	5.0	4.2	
	V_{DDQ}	0.80	0.80	0.80	0.80	
105°C	V_{DD1}	2.5	2.0	2.0	2.0	
	V_{DD2}	12.0	9.0	7.2	6.0	
	V_{DDQ}	0.80	0.80	0.80	0.80	

Notes:
1. I_{DD6} 25°C is the typical, I_{DD6} 95°C and I_{DD6} 105°C are the maximum of the distribution of the arithmetic mean.
2. When T_C > 105°C, self refresh mode is not available.

Micron Technology, Inc. reserves the right to change products or specifications without notice.
© 2017 Micron Technology, Inc. All rights reserved.

LPDDR4X I_{DD} Parameters

Refer to LPDDR4X I_{DD} Specification Parameters and Test Conditions section for detailed conditions.

Table 8: LPDDR4X I_{DD} Specifications under 3733 Mb/s – Single Die

V_{DD2} = 1.06–1.17V; V_{DDQ} = 0.57–0.65V; V_{DD1} = 1.70–1.95V

Parameter	Supply	T_C/3733 Mb/s			Unit	Note
		95°C	105°C	125°C		
I_{DD01}	V_{DD1}	3.2	3.2	3.8	mA	
I_{DD02}	V_{DD2}	40.0	40.0	45.2		
I_{DD0Q}	V_{DDQ}	0.80	0.80	1.0		
I_{DD2P1}	V_{DD1}	1.4	1.4	1.9	mA	
I_{DD2P2}	V_{DD2}	2.6	2.6	3.4		
I_{DD2PQ}	V_{DDQ}	0.80	0.80	1.2		
I_{DD2PS1}	V_{DD1}	1.4	1.4	1.9	mA	
I_{DD2PS2}	V_{DD2}	2.6	2.6	3.4		
I_{DD2PSQ}	V_{DDQ}	0.80	0.80	1.2		
I_{DD2N1}	V_{DD1}	1.4	1.4	2.0	mA	
I_{DD2N2}	V_{DD2}	22.8	25.0	30.4		
I_{DD2NQ}	V_{DDQ}	0.80	0.80	1.0		
I_{DD2NS1}	V_{DD1}	1.4	1.4	2.0	mA	
I_{DD2NS2}	V_{DD2}	18.0	18.0	23.2		
I_{DD2NSQ}	V_{DDQ}	0.80	0.80	1.0		
I_{DD3P1}	V_{DD1}	1.4	1.4	2.0	mA	
I_{DD3P2}	V_{DD2}	13.0	13.0	18.5		
I_{DD3PQ}	V_{DDQ}	0.80	0.80	1.2		
I_{DD3PS1}	V_{DD1}	1.4	1.4	2.0	mA	
I_{DD3PS2}	V_{DD2}	13.0	13.0	18.5		
I_{DD3PSQ}	V_{DDQ}	0.80	0.80	1.2		
I_{DD3N1}	V_{DD1}	1.7	1.7	2.2	mA	
I_{DD3N2}	V_{DD2}	27.3	28.0	34.9		
I_{DD3NQ}	V_{DDQ}	0.80	0.80	1.0		
I_{DD3NS1}	V_{DD1}	1.7	1.7	2.2	mA	
I_{DD3NS2}	V_{DD2}	21.4	22.0	27.5		
I_{DD3NSQ}	V_{DDQ}	0.80	0.80	1.0		
I_{DD4R1}	V_{DD1}	2.1	2.1	2.5	mA	2, 3
I_{DD4R2}	V_{DD2}	322	330	342		
I_{DD4RQ}	V_{DDQ}	91.0	91.0	92.6		
I_{DD4W1}	V_{DD1}	2.1	2.1	2.5	mA	3
I_{DD4W2}	V_{DD2}	272	280	292		
I_{DD4WQ}	V_{DDQ}	0.80	0.80	0.90		

Micron Technology, Inc. reserves the right to change products or specifications without notice.
© 2017 Micron Technology, Inc. All rights reserved.

Table 8: LPDDR4X I_{DD} Specifications under 3733 Mb/s – Single Die (Continued)

V_{DD2} = 1.06–1.17V; V_{DDQ} = 0.57–0.65V; V_{DD1} = 1.70–1.95V

Parameter	Supply	T_C/3733 Mb/s			Unit	Note
		95°C	105°C	125°C		
I_{DD51}	V_{DD1}	10.0	10.0	11.2	mA	
I_{DD52}	V_{DD2}	76.0	76.0	83.0		
I_{DD5Q}	V_{DDQ}	0.80	0.80	1.0		
I_{DD5AB1}	V_{DD1}	4.2	4.2	5.8	mA	
I_{DD5AB2}	V_{DD2}	40.0	40.0	47.1		
I_{DD5ABQ}	V_{DDQ5}	0.80	0.80	1.0		
I_{DD5PB1}	V_{DD1}	4.2	4.2	5.8	mA	
I_{DD5PB2}	V_{DD2}	40.0	40.0	47.4		
I_{DD5PBQ}	V_{DDQ}	0.80	0.80	1.0		

Notes:
1. Published I_{DD} values except I_{DD4RQ} are the maximum of the distribution of the arithmetic mean. Refer to the following note for I_{DD4RQ}; refer to I_{DD6} Full-Array Self Refresh Current table for I_{DD6}.
2. I_{DD4RQ} value is reference only. Typical value. DBI disabled, $V_{OH} = 0.5 \times V_{DDQ}$, T_C = 25°C.
3. Measurement conditions of I_{DD4R} and I_{DD4W} values: DBI disabled, BL = 16.

Table 9: LPDDR4X I_{DD} Specifications under 4266 Mb/s – Single Die

V_{DD2} = 1.06–1.17V; V_{DDQ} = 0.57–0.65V; V_{DD1} = 1.70–1.95V

Parameter	Supply	T_C/4266 Mb/s			Unit	Note
		95°C	105°C	125°C		
I_{DD01}	V_{DD1}	3.2	3.2	3.8	mA	
I_{DD02}	V_{DD2}	42.0	42.0	47.5		
I_{DD0Q}	V_{DDQ}	0.80	0.80	1.0		
I_{DD2P1}	V_{DD1}	1.4	1.4	1.9	mA	
I_{DD2P2}	V_{DD2}	2.6	2.6	3.4		
I_{DD2PQ}	V_{DDQ}	0.80	0.80	1.2		
I_{DD2PS1}	V_{DD1}	1.4	1.4	1.9	mA	
I_{DD2PS2}	V_{DD2}	2.6	2.6	3.4		
I_{DD2PSQ}	V_{DDQ}	0.80	0.80	1.2		
I_{DD2N1}	V_{DD1}	1.4	1.4	2.0	mA	
I_{DD2N2}	V_{DD2}	23.8	26.0	31.7		
I_{DD2NQ}	V_{DDQ}	0.80	0.80	1.0		
I_{DD2NS1}	V_{DD1}	1.4	1.4	2.0	mA	
I_{DD2NS2}	V_{DD2}	18.0	18.0	23.2		
I_{DD2NSQ}	V_{DDQ}	0.80	0.80	1.0		
I_{DD3P1}	V_{DD1}	1.4	1.4	2.0	mA	
I_{DD3P2}	V_{DD2}	13.0	13.0	18.5		
I_{DD3PQ}	V_{DDQ}	0.80	0.80	1.2		

Micron Technology, Inc. reserves the right to change products or specifications without notice.
© 2017 Micron Technology, Inc. All rights reserved.

Table 9: LPDDR4X I_{DD} Specifications under 4266 Mb/s – Single Die (Continued)

V_{DD2} = 1.06–1.17V; V_{DDQ} = 0.57–0.65V; V_{DD1} = 1.70–1.95V

Parameter	Supply	T_C/4266 Mb/s			Unit	Note
		95°C	105°C	125°C		
I_{DD3PS1}	V_{DD1}	1.4	1.4	2.0	mA	
I_{DD3PS2}	V_{DD2}	13.0	13.0	18.5		
I_{DD3PSQ}	V_{DDQ}	0.80	0.80	1.2		
I_{DD3N1}	V_{DD1}	1.7	1.7	2.2	mA	
I_{DD3N2}	V_{DD2}	28.3	29.0	36.2		
I_{DD3NQ}	V_{DDQ}	0.80	0.80	1.0		
I_{DD3NS1}	V_{DD1}	1.7	1.7	2.2	mA	
I_{DD3NS2}	V_{DD2}	21.4	22.0	27.5		
I_{DD3NSQ}	V_{DDQ}	0.80	0.80	1.0		
I_{DD4R1}	V_{DD1}	2.2	2.2	2.7	mA	2, 3
I_{DD4R2}	V_{DD2}	366	375	389		
I_{DD4RQ}	V_{DDQ}	101	101	103		
I_{DD4W1}	V_{DD1}	2.2	2.2	2.7	mA	3
I_{DD4W2}	V_{DD2}	296	305	319		
I_{DD4WQ}	V_{DDQ}	0.80	0.80	0.90		
I_{DD51}	V_{DD1}	10.5	10.5	11.8	mA	
I_{DD52}	V_{DD2}	80.0	80.0	87.4		
I_{DD5Q}	V_{DDQ}	0.80	0.80	1.0		
I_{DD5AB1}	V_{DD1}	4.2	4.2	5.8	mA	
I_{DD5AB2}	V_{DD2}	45.0	45.0	53.0		
I_{DD5ABQ}	V_{DDQ5}	0.80	0.80	1.0		
I_{DD5PB1}	V_{DD1}	4.2	4.2	5.8	mA	
I_{DD5PB2}	V_{DD2}	45.0	45.0	53.4		
I_{DD5PBQ}	V_{DDQ}	0.80	0.80	1.0		

Notes:
1. Published I_{DD} values except I_{DD4RQ} are the maximum of the distribution of the arithmetic mean. Refer to the following note for I_{DD4RQ}; refer to I_{DD6} Full-Array Self Refresh Current table for I_{DD6}.
2. I_{DD4RQ} value is reference only. Typical value. DBI disabled, $V_{OH} = 0.5 \times V_{DDQ}$, T_C = 25°C.
3. Measurement conditions of I_{DD4R} and I_{DD4W} values: DBI disabled, BL = 16.

Micron Technology, Inc. reserves the right to change products or specifications without notice.
© 2017 Micron Technology, Inc. All rights reserved.

Table 10: LPDDR4X I_{DD6} Full-Array Self Refresh Current

V_{DD2} = 1.06–1.17V; V_{DDQ} = 0.57–0.65V; V_{DD1} = 1.70–1.95V

Temperature	Supply	Self Refresh Current/3733 Mb/s and 4266 Mb/s				Unit
		Full-Array	1/2-Array	1/4-Array	1/8-Array	
25°C	V_{DD1}	0.10	0.10	0.10	0.10	mA
	V_{DD2}	0.30	0.30	0.30	0.30	
	V_{DDQ}	0.01	0.01	0.01	0.01	
95°C	V_{DD1}	2.5	2.0	2.0	2.0	
	V_{DD2}	8.4	6.3	5.0	4.2	
	V_{DDQ}	0.80	0.80	0.80	0.80	
105°C	V_{DD1}	2.5	2.0	2.0	2.0	
	V_{DD2}	12.0	9.0	7.2	6.0	
	V_{DDQ}	0.80	0.80	0.80	0.80	

Notes:
1. I_{DD6} 25°C is the typical, I_{DD6} 95°C and I_{DD6} 105°C are the maximum of the distribution of the arithmetic mean.
2. When T_C > 105°C, self refresh mode is not available.

Micron Technology, Inc. reserves the right to change products or specifications without notice.
© 2017 Micron Technology, Inc. All rights reserved.

Functional Description

The Mobile Low-Power DDR4 SDRAM (LPDDR4) is a high-speed CMOS, dynamic random-access memory internally configured with either 1 or 2 channels. Each channel is comprised of 16 DQs and 8 banks.

LPDDR4 uses a 2-tick, single-data-rate (SDR) protocol on the CA bus to reduce the number of input signals in the system. The term "2-tick" means that the command/address is decoded across two transactions, such that half of the command/address is captured with each of two consecutive rising edges of CK. The 6-bit CA bus contains command, address, and bank information. Some commands such as READ, WRITE, MASKED WRITE, and ACTIVATE require two consecutive 2-tick SDR commands to complete the instruction.

LPDDR4 uses a double-data-rate (DDR) protocol on the DQ bus to achieve high-speed operation. The DDR interface transfers two data bits to each DQ lane in one clock cycle and is matched to a 16*n*-prefetch DRAM architecture. A write/read access consists of a single 16*n*-bit-wide data transfer to/from the DRAM core and 16 corresponding *n*-bit-wide data transfers at the I/O pins.

Read and write accesses to the device are burst-oriented. Accesses start at a selected column address and continue for a programmed number of columns in a programmed sequence.

Accesses begin with the registration of an ACTIVATE command to open a row in the memory core, followed by a WRITE or READ command to access column data within the open row. The address and bank address (BA) bits registered by the ACTIVATE command are used to select the bank and row to be opened. The address and BA bits registered with the WRITE or READ command are used to select the bank and the starting column address for the burst access.

Prior to normal operation, the LPDDR4 SDRAM must be initialized. Following sections provide detailed information about device initialization, register definition, command descriptions and device operations.

Micron Technology, Inc. reserves the right to change products or specifications without notice.
© 2017 Micron Technology, Inc. All rights reserved.

Figure 7: Functional Block Diagram

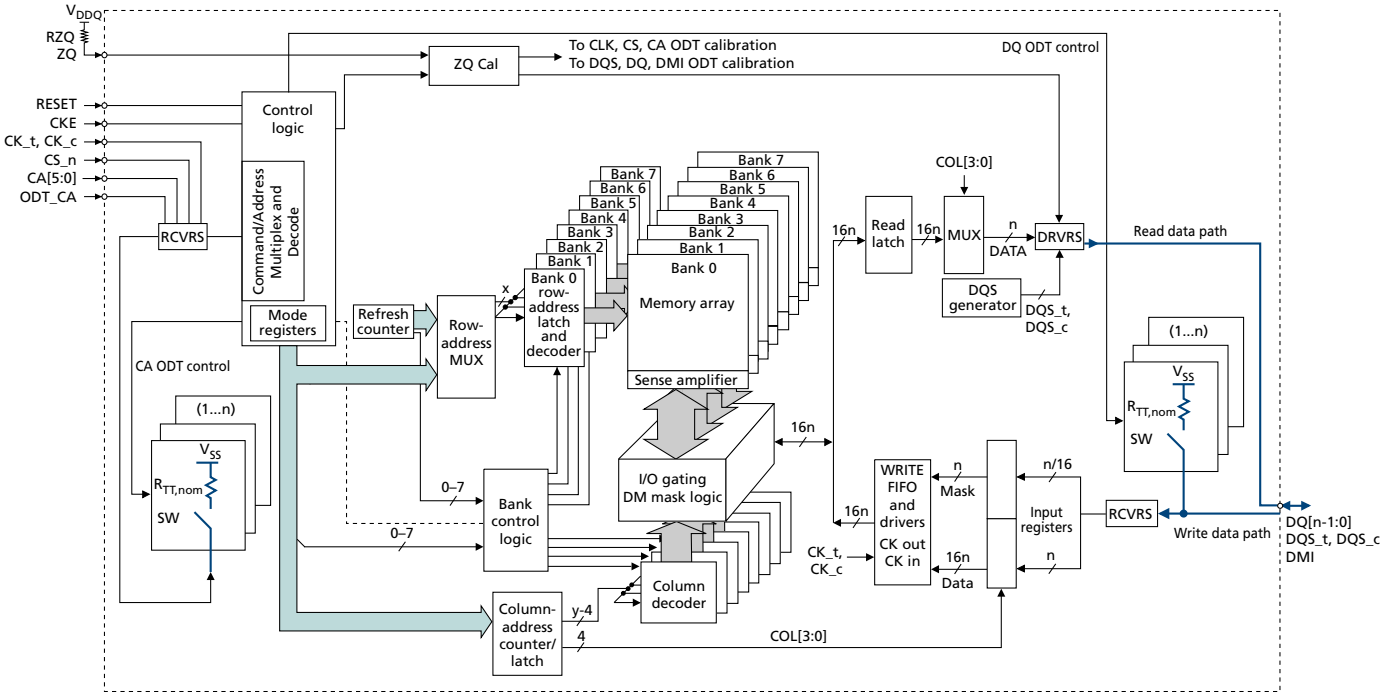

Monolithic Device Addressing

The table below includes all monolithic device addressing options defined by JEDEC. Under the SDRAM Addressing heading near the beginning of this data sheet are addressing details for this product data sheet.

Micron Technology, Inc. reserves the right to change products or specifications without notice.
© 2017 Micron Technology, Inc. All rights reserved.

Table 11: Monolithic Device Addressing – Dual-Channel Die

Memory Density (Per Die)		4Gb	6Gb	8Gb	12Gb	16Gb	24Gb	32Gb
Memory density (per channel)		2Gb	3Gb	4Gb	6Gb	8Gb	12Gb	16Gb
Configuration		16Mb × 16DQ × 8 banks × 2 channels	24Mb × 16DQ × 8 banks × 2 channels	32Mb × 16DQ × 8 banks × 2 channels	48Mb × 16DQ × 8 banks × 2 channels	64Mb × 16DQ × 8 banks × 2 channels	96Mb × 16DQ × 8 banks × 2 channels	128Mb × 16DQ × 8 banks × 2 channels
Number of channels (per die)		2	2	2	2	2	2	2
Number of banks (per channel)		8	8	8	8	8	8	8
Array prefetch (bits, per channel)		256	256	256	256	256	256	256
Number of rows (per channel)		16,384	24,576	32,768	49,152	65,536	98,304	131,072
Number of columns (fetch boundaries)		64	64	64	64	64	64	64
Page size (bytes)		2048	2048	2048	2048	2048	2048	2048
Channel density (bits per channel)		2,147,483,648	3,221,225,472	4,294,967,296	6,442,450,944	8,589,934,592	12,884,901,888	17,179,869,184
Total density (bits per die)		4,294,967,296	6,442,450,944	8,589,934,592	12,884,901,888	17,179,869,184	25,769,803,776	34,359,738,368
Bank address		BA[2:0]	BA[2:0]	BA[2:0]	BA[2:0]	BA[2:0]	BA[2:0]	BA[2:0]
×16	Row add	R[13:0]	R[14:0] (R13 = 0 when R14 = 1)	R[14:0]	R[15:0] (R14 = 0 when R15 = 1)	R[15:0]	R[16:0] (R15 = 0 when R16 = 1)	R[16:0]
	Col. add	C[9:0]	C[9:0]	C[9:0]	C[9:0]	C[9:0]	C[9:0]	C[9:0]
Burst starting address boundary		64 bit	64 bit	64 bit	64 bit	64 bit	64 bit	64 bit

Micron Technology, Inc. reserves the right to change products or specifications without notice.
© 2017 Micron Technology, Inc. All rights reserved.

Table 12: Monolithic Device Addressing – Single-Channel Die

Memory Density (Per Die)		2Gb	3Gb	4Gb	6Gb	8Gb	12Gb	16Gb
Memory density (per channel)		2Gb	3Gb	4Gb	6Gb	8Gb	12Gb	16Gb
Configuration		16Mb × 16 DQ × 8 banks	24Mb × 16 DQ × 8 banks	32Mb × 16 DQ × 8 banks	48Mb × 16 DQ × 8 banks	64Mb × 16 DQ × 8 banks	96Mb × 16 DQ × 8 banks	128Mb × 16 DQ × 8 banks
Number of channels (per die)		1	1	1	1	1	1	1
Number of banks (per channel)		8	8	8	8	8	8	8
Array prefetch (bits, per channel)		256	256	256	256	256	256	256
Number of rows (per channel)		16,384	24,576	32,768	49,152	65,536	98,304	131,072
Number of columns (fetch boundaries)		64	64	64	64	64	64	64
Page size (bytes)		2048	2048	2048	2048	2048	2048	2048
Channel density (bits per channel)		2,147,483,648	3,221,225,472	4,294,967,296	6,442,450,944	8,589,934,592	12,884,901,888	17,179,869,184
Total density (bits per die)		2,147,483,648	3,221,225,472	4,294,967,296	6,442,450,944	8,589,934,592	12,884,901,888	17,179,869,184
Bank address		BA[2:0]	BA[2:0]	BA[2:0]	BA[2:0]	BA[2:0]	BA[2:0]	BA[2:0]
×16	Row add	R[13:0]	R[14:0] (R13 = 0 when R14 = 1)	R[14:0]	R[15:0] (R14 = 0 when R15 = 1)	R[15:0]	R[16:0] (R15 = 0 when R16 = 1)	R[16:0]
	Col. add	C[9:0]	C[9:0]	C[9:0]	C[9:0]	C[9:0]	C[9:0]	C[9:0]
Burst starting address boundary		64 bit	64 bit	64 bit	64 bit	64 bit	64 bit	64 bit

Notes:
1. The lower two column addresses (C[1:0]) are assumed to be zero and are not transmitted on the CA bus.
2. Row and column address values on the CA bus that are not used for a particular density should be at valid logic levels.
3. For non-binary memory densities, only a quarter of the row address space is invalid. When the MSB address bit is HIGH, then the MSB - 1 address bit must be LOW.

Micron Technology, Inc. reserves the right to change products or specifications without notice.
© 2017 Micron Technology, Inc. All rights reserved.

Simplified Bus Interface State Diagram

The state diagram provides a simplified illustration of the bus interface, supported state transitions, and the commands that control them. For a complete description of device behavior, use the information provided in the state diagram with the truth tables and timing specifications. The truth tables describe device behavior and applicable restrictions when considering the actual state of all banks. For command descriptions, see the Commands and Timing section.

Figure 8: Simplified State Diagram

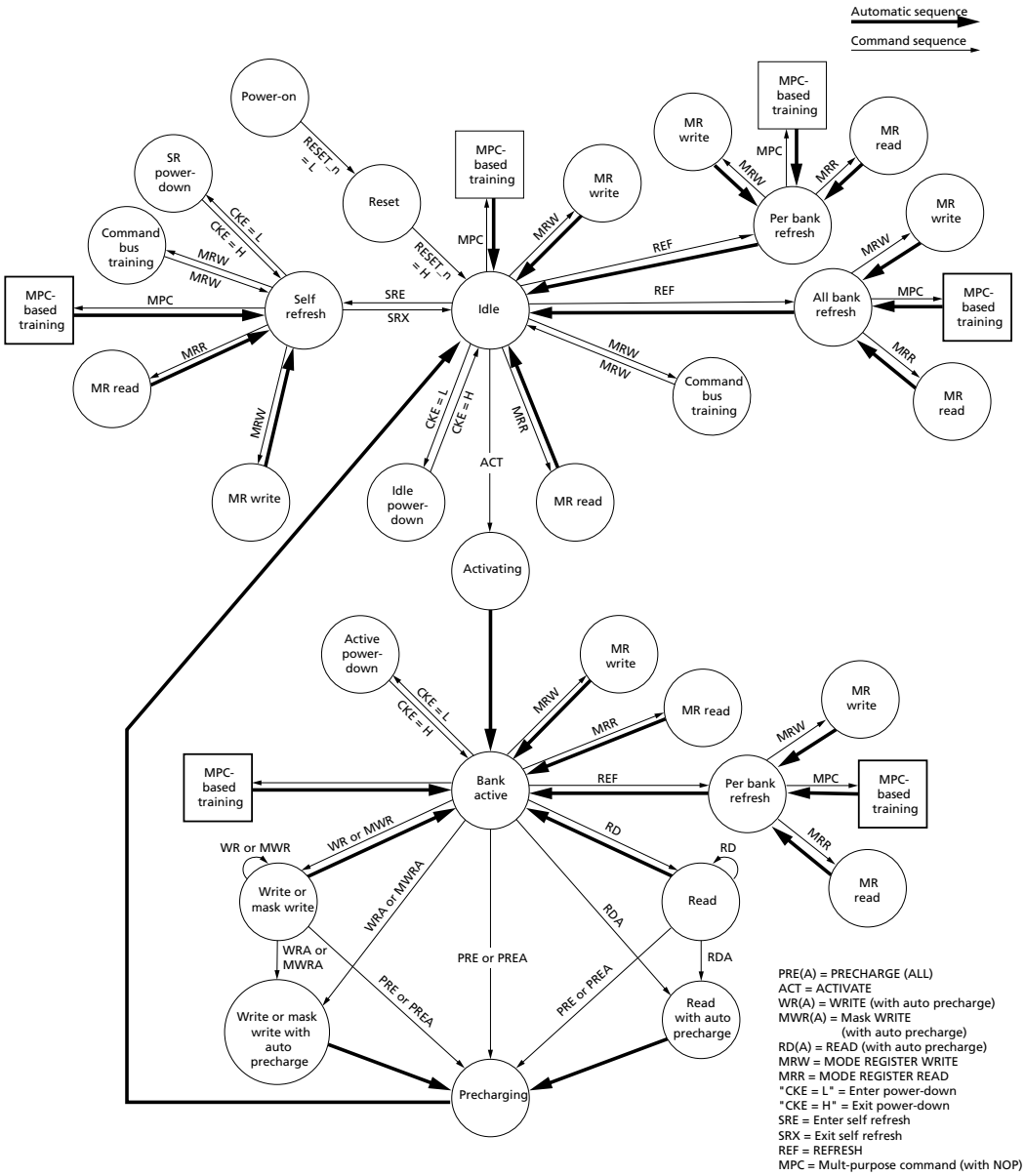

Notes: 1. From the self refresh state, the device can enter power-down, MRR, MRW, or any of the training modes initiated with the MPC command. See the Self Refresh section.

Micron Technology, Inc. reserves the right to change products or specifications without notice.
© 2017 Micron Technology, Inc. All rights reserved.

2. All banks are precharged in the idle state.
3. In the case of using an MRW command to enter a training mode, the state machine will not automatically return to the idle state at the conclusion of training. See the applicable training section for more information.
4. In the case of an MPC command to enter a training mode, the state machine may not automatically return to the idle state at the conclusion of training. See the applicable training section for more information.
5. This diagram is intended to provide an overview of the possible state transitions and commands to control them; however, it does not contain the details necessary to operate the device. In particular, situations involving more than one bank are not captured in complete detail.
6. States that have an "automatic return" and can be accessed from more than one prior state (that is, MRW from either idle or active states) will return to the state where they were initiated (that is, MRW from idle will return to idle).
7. The RESET pin can be asserted from any state and will cause the device to enter the reset state. The diagram shows RESET applied from the power-on and idle states as an example, but this should not be construed as a restriction on RESET.
8. MRW commands from the active state cannot change operating parameters of the device that affect timing. Mode register fields which may be changed via MRW from the active state include: MR1-OP[3:0], MR1-OP[7], MR3-OP[7:6], MR10-OP[7:0], MR11-OP[7:0], MR13-OP[5], MR15-OP[7:0], MR16-OP[7:0], MR17-OP[7:0], MR20-OP[7:0], and MR22-OP[4:0].

Figure 9: Simplified State Diagram

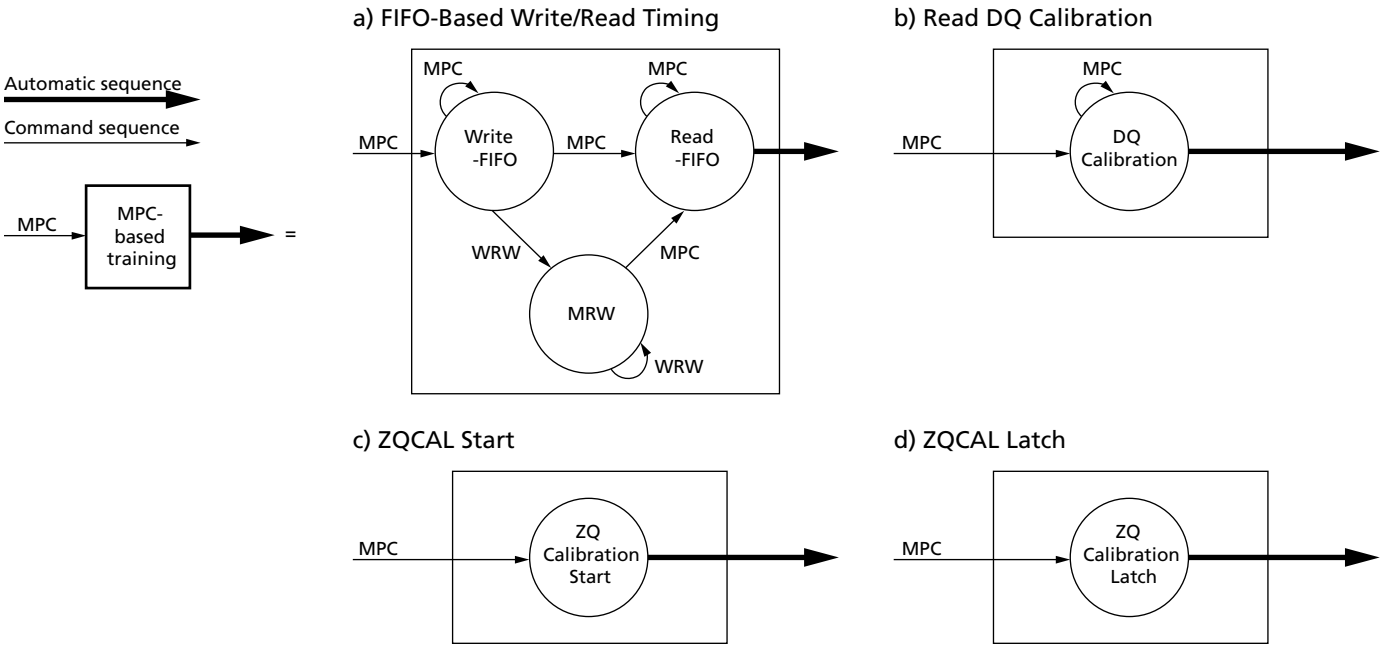

Power-Up and Initialization

To ensure proper functionality for power-up and reset initialization, default values for the MR settings are provided in the table below.

Micron Technology, Inc. reserves the right to change products or specifications without notice.
© 2017 Micron Technology, Inc. All rights reserved.

Table 13: Mode Register Default Settings

Item	Mode Register Setting	Default Setting	Description
FSP-OP/WR	MR13 OP[7:6]	00b	FSP-OP/WR[0] are enabled
WLS	MR2 OP[6]	0b	WRITE latency set A is selected
WL	MR2 OP[5:3]	000b	WL = 4
RL	MR2 OP[2:0]	000b	RL = 6, *n*RTP = 8
*n*WR	MR1 OP[6:4]	000b	*n*WR = 6
DBI-WR/RD	MR3 OP[7:6]	00b	Write and read DBI are disabled
CA ODT	MR11 OP[6:4]	000b	CA ODT is disabled
DQ ODT	MR11 OP[2:0]	000b	DQ ODT is disabled
$V_{REF(CA)}$ setting	MR12 OP[6]	1b	$V_{REF(CA)}$ range[1] is enabled
$V_{REF(CA)}$ value	MR12 OP[5:0]	011101b	Range1: 50.3% of V_{DDQ}
$V_{REF(DQ)}$ setting	MR14 OP[6]	1b	$V_{REF(DQ)}$ range[1] enabled
$V_{REF(DQ)}$ value	MR14 OP[5:0]	011101b	Range1: 50.3% of V_{DDQ}

The following sequence must be used to power up the device. Unless specified otherwise, this procedure is mandatory. The power-up sequence of all channels must proceed simultaneously.

Voltage Ramp

1. While applying power (after Ta), RESET_n should be held LOW ($\leq 0.2 \times V_{DD2}$), and all other inputs must be between $V_{IL,min}$ and $V_{IH,max}$. The device outputs remain at High-Z while RESET_n is held LOW. Power supply voltage ramp requirements are provided in the table below. V_{DD1} must ramp at the same time or earlier than V_{DD2}. V_{DD2} must ramp at the same time or earlier than V_{DDQ}.

Table 14: Voltage Ramp Conditions

After...	Applicable Conditions
Ta is reached	V_{DD1} must be greater than V_{DD2}
	V_{DD2} must be greater than V_{DDQ} - 200mV

Notes:
1. Ta is the point when any power supply first reaches 300mV.
2. Voltage ramp conditions in above table apply between Ta and power-off (controlled or uncontrolled).
3. Tb is the point at which all supply and reference voltages are within their defined operating ranges.
4. Power ramp duration ^{t}INIT0 (Tb–Ta) must not exceed 20ms.
5. The voltage difference between any V_{SS} and V_{SSQ} must not exceed 100mV.

2. Following completion of the of the voltage ramp (Tb), RESET_n must be held LOW for ^{t}INIT1. DQ, DMI, DQS_t, and DQS_c voltage levels must be between V_{SSQ} and V_{DDQ} during voltage ramp to avoid latch-up. CK_t and CK_c, CS, and CA input levels must be between V_{SS} and V_{DD2} during voltage ramp to avoid latch-up. Voltage ramp power supply requirements are provided in the table below.

Micron Technology, Inc. reserves the right to change products or specifications without notice.
© 2017 Micron Technology, Inc. All rights reserved.

3. Beginning at Tb, RESET_n must remain LOW for at least ^{t}INIT1(Tc), after which RESET_n can be de-asserted to HIGH(Tc). At least 10ns before CKE de-assertion, CKE is required to be set LOW. All other input signals are "Don't Care."

Figure 10: Voltage Ramp and Initialization Sequence

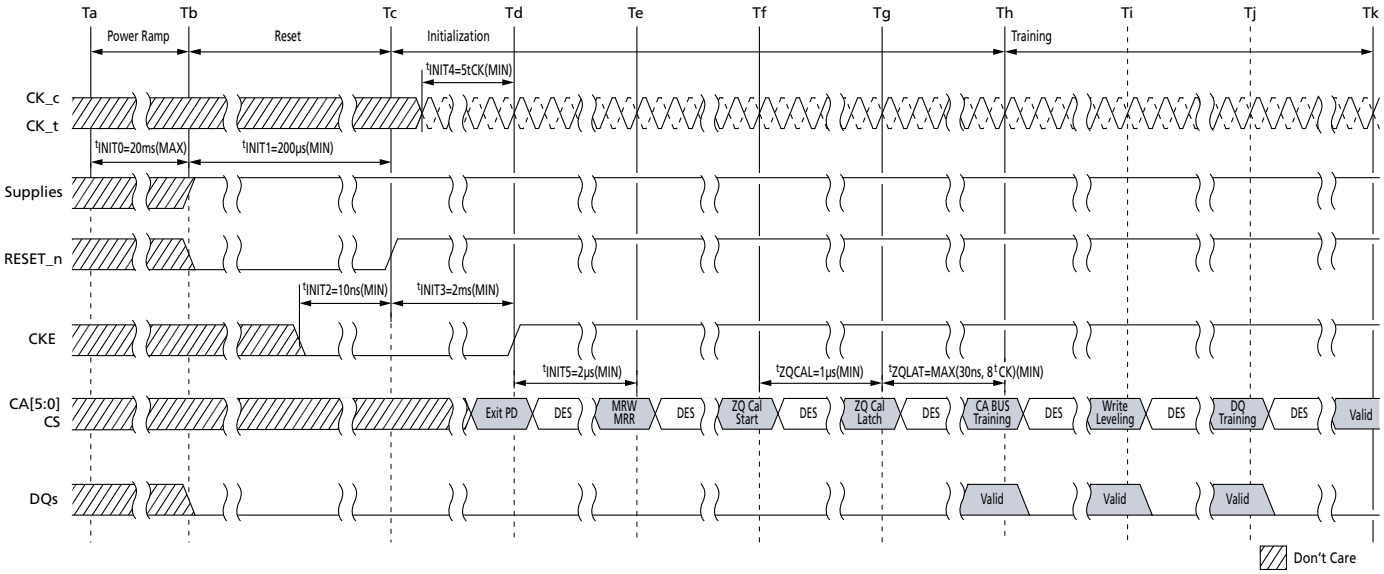

Note: 1. Training is optional and may be done at the system designer's discretion. The order of training may be different than what is shown here.

4. After RESET_n is de-asserted(Tc), wait at least ^{t}INIT3 before activating CKE. CK_t, CK_c must be started and stabilized for ^{t}INIT4 before CKE goes active(Td). CS must remain LOW when the controller activates CKE.

5. After CKE is set to HIGH, wait a minimum of ^{t}INIT5 to issue any MRR or MRW commands(Te). For MRR and MRW commands, the clock frequency must be within the range defined for ^{t}CKb. Some AC parameters (for example, ^{t}DQSCK) could have relaxed timings (such as ^{t}DQSCKb) before the system is appropriately configured.

6. After completing all MRW commands to set the pull-up, pull-down, and Rx termination values, the controller can issue the ZQCAL START command to the memory(Tf). This command is used to calibrate the V_{OH} level and the output impedance over process, voltage, and temperature. In systems where more than one device share one external ZQ resistor, the controller must not overlap the ZQ calibration sequence of each device. The ZQ calibration sequence is completed after ^{t}ZQCAL (Tg). The ZQCAL LATCH command must be issued to update the DQ drivers and DQ + CA ODT to the calibrated values.

7. After ^{t}ZQLAT is satisfied (Th), the command bus (internal $V_{REF(CA)}$, CS, and CA) should be trained for high-speed operation by issuing an MRW command (command bus training mode). This command is used to calibrate the device's internal V_{REF} and align CS/CA with CK for high-speed operation. The device will power-up with receivers configured for low-speed operations and with $V_{REF(CA)}$ set to a default factory setting. Normal device operation at clock speeds higher than ^{t}CKb may not be possible until command bus training is complete. The command bus training MRW command uses the CA bus as inputs for the calibration data stream, and it outputs the results asynchro-

Micron Technology, Inc. reserves the right to change products or specifications without notice.
© 2017 Micron Technology, Inc. All rights reserved.

nously on the DQ bus. See command bus training in the MRW section for information on how to enter/exit the training mode.

8. After command bus training, the controller must perform write leveling. Write leveling mode is enabled when MR2 OP[7] is HIGH(Ti). See the Write Leveling section for a detailed description of the write leveling entry and exit sequence. In write leveling mode, the controller adjusts write DQS timing to the point where the device recognizes the start of write DQ data burst with desired WRITE latency.

9. After write leveling, the DQ bus (internal $V_{REF(DQ)}$, DQS, and DQ) should be trained for high-speed operation using the MPC TRAINING commands and by issuing MRW commands to adjust $V_{REF(DQ)}$. The device will power-up with receivers configured for low-speed operations and with $V_{REF(DQ)}$) set to a default factory setting. Normal device operation at clock speeds higher than ^{t}CKb should not be attempted until DQ bus training is complete. The MPC[READ DQ CALIBRATION] command is used together with MPC[READ-FIFO] or MPC[WRITE-FIFO] commands to train the DQ bus without disturbing the memory array contents. See the DQ Bus Training section for more information on the DQ bus training sequence.

10. At Tk, the device is ready for normal operation and is ready to accept any valid command. Any mode registers that have not previously been configured for normal operation should be written at this time.

Table 15: Initialization Timing Parameters

Parameter	Min	Max	Unit	Comment
^{t}INIT0	–	20	ms	Maximum voltage ramp time
^{t}INIT1	200	–	µs	Minimum RESET_n LOW time after completion of voltage ramp
^{t}INIT2	10	–	ns	Minimum CKE LOW time before RESET_n goes HIGH
^{t}INIT3	2	–	ms	Minimum CKE LOW time after RESET_n goes HIGH
^{t}INIT4	5	–	^{t}CK	Minimum stable clock before first CKE HIGH
^{t}INIT5	2	–	µs	Minimum idle time before first MRW/MRR command
^{t}CKb	Note [1, 2]	Note [1, 2]	ns	Clock cycle time during boot

Notes:
1. Minimum ^{t}CKb guaranteed by DRAM test is 18ns.
2. The system may boot at a higher frequency than dictated by minimum ^{t}CKb. The higher boot frequency is system dependent.

Reset Initialization with Stable Power

The following sequence is required for RESET at no power interruption initialization.

1. Assert RESET_n below $0.2 \times V_{DD2}$ anytime when reset is needed. RESET_n needs to be maintained for minimum ^{t}PW_RESET. CKE must be pulled LOW at least 10ns before de-asserting RESET_n.
2. Repeat steps 4–10 in Voltage Ramp section.

Micron Technology, Inc. reserves the right to change products or specifications without notice.
© 2017 Micron Technology, Inc. All rights reserved.

Table 16: Reset Timing Parameter

Parameter	Value		Unit	Comment
	Min	Max		
^{t}PW_RESET	100	–	ns	Minimum RESET_n LOW time for reset initialization with stable power

Power-Off Sequence

Controlled Power-Off

While powering off, CKE must be held LOW (≤0.2 × V_{DD2}); all other inputs must be between $V_{IL,min}$ and $V_{IH,max}$. The device outputs remain at High-Z while CKE is held LOW.

DQ, DMI, DQS_t, and DQS_c voltage levels must be between V_{SSQ} and V_{DDQ} during the power-off sequence to avoid latch-up. CK_t, CK_c, CS, and CA input levels must be between V_{SS} and V_{DD2} during the power-off sequence to avoid latch-up.

Tx is the point where any power supply drops below the minimum value specified in the minimum DC Operating Condition.

Tz is the point where all power supplies are below 300mV. After Tz, the device is powered off.

Table 17: Power Supply Conditions

The voltage difference between V_{SS} and V_{SSQ} must not exceed 100mV

Between...	Applicable Conditions
Tx and Tz	V_{DD1} must be greater than V_{DD2}
	V_{DD2} must be greater than V_{DDQ} - 200mV

Uncontrolled Power-Off

When an uncontrolled power-off occurs, the following conditions must be met.

- At Tx, when the power supply drops below the minimum values specified in the Recommended DC Operating Conditions table, all power supplies must be turned off and all power supply current capacity must be at zero, except for any static charge remaining in the system.
- After Tz (the point at which all power supplies first reach 300mV), the device must power off. During this period, the relative voltage between power supplies is uncontrolled. V_{DD1} and V_{DD2} must decrease with a slope lower than 0.5 V/µs between Tx and Tz.

An uncontrolled power-off sequence can occur a maximum of 400 times over the life of the device.

Micron Technology, Inc. reserves the right to change products or specifications without notice.
© 2017 Micron Technology, Inc. All rights reserved.

Table 18: Power-Off Timing

Parameter	Symbol	Min	Max	Unit
Power-off ramp time	^{t}POFF	–	2	sec

Mode Registers

Mode Register Assignments and Definitions

Mode register definitions are provided in the Mode Register Assignments table. In the access column of the table, R indicates read-only; W indicates write-only; R/W indicates read- or write-capable or enabled. The MRR command is used to read from a register. The MRW command is used to write to a register.

Table 19: Mode Register Assignments

Notes 1–5 apply to entire table

MR#	MA[5:0]	Function	Access	OP7	OP6	OP5	OP4	OP3	OP2	OP1	OP0
0	00h	Device info	R	RFU			RZQI		RFU	Latency mode	REF
1	01h	Device feature 1	W	RD-PST	*n*WR (for AP)			RD-PRE	WR-PRE	BL	
2	02h	Device feature 2	W	WR Lev	WLS	WL			RL		
3	03h	I/O config-1	W	DBI-WR	DBI-RD	PDDS			PPRP	WR-PST	PU-CAL
4	04h	Refresh and training	R /W	TUF	Thermal offset		PPRE	SR abort	Refresh rate		
5	05h	Basic config-1	R	Manufacturer ID							
6	06h	Basic config-2	R	Revision ID1							
7	07h	Basic config-3	R	Revision ID2							
8	08h	Basic config-4	R	I/O width		Density				Type	
9	09h	Test mode	W	Vendor-specific test mode							
10	0Ah	I/O calibration	W	RFU							ZQ RST
11	0Bh	ODT	W	RFU	CA ODT			RFU	DQ ODT		
12	0Ch	$V_{REF(CA)}$	R/W	RFU	VR_{CA}	$V_{REF(CA)}$					
13	0Dh	Register control	W	FSP-OP	FSP-WR	DMD	RRO	VRCG	VRO	RPT	CBT
14	0Eh	$V_{REF(DQ)}$	R/W	RFU	VR_{DQ}	$V_{REF(DQ)}$					
15	0Fh	DQI-LB	W	Lower-byte invert register for DQ calibration							
16	10h	PASR_Bank	W	PASR bank mask							
17	11h	PASR_Seg	W	PASR segment mask							
18	12h	IT-LSB	R	DQS oscillator count – LSB							
19	13h	IT-MSB	R	DQS oscillator count – MSB							
20	14h	DQI-UB	W	Upper-byte invert register for DQ calibration							
21	15h	Vendor use	W	RFU							
22	16h	ODT feature 2	W	ODTD for x8_2ch		ODTD -CA	ODTE -CS	ODTE -CK	SoC ODT		

Micron Technology, Inc. reserves the right to change products or specifications without notice.
© 2017 Micron Technology, Inc. All rights reserved.

Table 19: Mode Register Assignments (Continued)

Notes 1–5 apply to entire table

MR#	MA[5:0]	Function	Access	OP7	OP6	OP5	OP4	OP3	OP2	OP1	OP0
23	17h	DQS oscillator stop	W	DQS oscillator run-time setting							
24	18h	TRR control	R/W	TRR mode	TRR mode BAn			Unltd MAC	MAC value		
25	19h	PPR resources	R	B7	B6	B5	B4	B3	B2	B1	B0
26–29	1Ah~1Dh	–	–	Reserved for future use							
30	1Eh	Reserved for test	W	SDRAM will ignore							
31	1Fh	–	–	Reserved for future use							
32	20h	DQ calibration pattern A	W	See DQ calibration section							
33–38	21h≈26h	Do not use	–	Do not use							
39	27h	Reserved for test	W	SDRAM will ignore							
40	28h	DQ calibration pattern B	W	See DQ calibration section							
41–47	29h≈2Fh	Do not use	–	Do not use							
48–63	30h≈3Fh	Reserved	–	Reserved for future use							

Notes:
1. RFU bits must be set to 0 during MRW commands.
2. RFU bits are read as 0 during MRR commands.
3. All mode registers that are specified as RFU or write-only shall return undefined data when read via an MRR command.
4. RFU mode registers must not be written.
5. Writes to read-only registers will not affect the functionality of the device.

Table 20: MR0 Device Feature 0 (MA[5:0] = 00h)

OP7	OP6	OP5	OP4	OP3	OP2	OP1	OP0
RFU			RZQI		RFU	Latency mode	REF

Table 21: MR0 Op-Code Bit Definitions

Register Information	Type	OP	Definition	Notes
Refresh mode	Read-only	OP[0]	0b: Both legacy and modified refresh mode supported 1b: Only modified refresh mode supported	
Latency mode	Read-only	OP[1]	0b: Device supports normal latency 1b: Device supports byte mode latency	5, 6

Micron Technology, Inc. reserves the right to change products or specifications without notice.
© 2017 Micron Technology, Inc. All rights reserved.

Table 21: MR0 Op-Code Bit Definitions (Continued)

Register Information	Type	OP	Definition	Notes
Built-in self-test for RZQ information	Read-only	OP[4:3]	00b: RZQ self-test not supported 01b: ZQ may connect to V_{SSQ} or float 10b: ZQ may short to V_{DDQ} 11b: ZQ pin self-test completed, no error condition detected (ZQ may not connect to V_{SSQ}, float, or short to V_{DDQ})	1–4

Notes:
1. RZQI MR value, if supported, will be valid after the following sequence:
   - Completion of MPC[ZQCAL START] command to either channel
   - Completion of MPC[ZQCAL LATCH] command to either channel then ^{t}ZQLAT is satisfied

   RZQI value will be lost after reset.
2. If ZQ is connected to V_{SSQ} to set default calibration, OP[4:3] must be set to 01b. If ZQ is not connected to V_{SSQ}, either OP[4:3] = 01b or OP[4:3] = 10b might indicate a ZQ pin assembly error. It is recommended that the assembly error be corrected.
3. In the case of possible assembly error, the device will default to factory trim settings for R_{ON}, and will ignore ZQ CALIBRATION commands. In either case, the device may not function as intended.
4. If the ZQ pin self-test returns OP[4:3] = 11b, the device has detected a resistor connected to the ZQ pin. However, this result cannot be used to validate the ZQ resistor value or that the ZQ resistor meets the specified limits (that is, 240Ω ±1%).
5. See byte mode addendum spec for byte mode latency details.
6. Byte mode latency for 2Ch. x16 device is only allowed when it is stacked in a same package with byte mode device.

Table 22: MR1 Device Feature 1 (MA[5:0] = 01h)

OP7	OP6	OP5	OP4	OP3	OP2	OP1	OP0
RD-PST	*n*WR (for AP)			RD-PRE	WR-PRE	BL	

Table 23: MR1 Op-Code Bit Definitions

Feature	Type	OP	Definition	Notes
BL Burst length	Write-only	OP[1:0]	00b: BL = 16 sequential (default) 01b: BL = 32 sequential 10b: BL = 16 or 32 sequential (on-the-fly) 11b: Reserved	1
WR-PRE Write preamble length	Write-only	OP[2]	0b: Reserved 1b: WR preamble = 2 × ^{t}CK	5, 6
RD-PRE Read preamble type	Write-only	OP[3]	0b: RD preamble = Static (default) 1b: RD preamble = Toggle	3, 5, 6

Micron Technology, Inc. reserves the right to change products or specifications without notice.
© 2017 Micron Technology, Inc. All rights reserved.

Table 23: MR1 Op-Code Bit Definitions (Continued)

Feature	Type	OP	Definition	Notes
*n*WR Write-recovery for AUTO PRECHARGE command	Write-only	OP[6:4]	000b: *n*WR = 6 (default) 001b: *n*WR = 10 010b: *n*WR = 16 011b: *n*WR = 20 100b: *n*WR = 24 101b: *n*WR = 30 110b: *n*WR = 34 111b: *n*WR = 40	2, 5, 6
RD-PST Read postamble length	Write-only	OP[7]	0b: RD postamble = 0.5 × ^{t}CK (default) 1b: RD postamble = 1.5 × ^{t}CK	4, 5, 6

Notes:
1. Burst length on-the-fly can be set to either BL = 16 or BL = 32 by setting the BL bit in the command operands. See the Command Truth Table.
2. The programmed value of *n*WR is the number of clock cycles the device uses to determine the starting point of an internal precharge after a write burst with auto precharge (AP) enabled. See Frequency Ranges for RL, WL, and *n*WR Settings table.
3. For READ operations, this bit must be set to select between a toggling preamble and a non-toggling preamble. (See the Preamble section.)
4. OP[7] provides an optional read postamble with an additional rising and falling edge of DQS_t. The optional postamble cycle is provided for the benefit of certain memory controllers.
5. There are two physical registers assigned to each bit of this MR parameter: designated set point 0 and set point 1. Only the registers for the set point determined by the state of the FSP-WR bit (MR13 OP[6]) will be written to with an MRW command to this MR address.
6. There are two physical registers assigned to each bit of this MR parameter: designated set point 0 and set point 1. The device will operate only according to the values stored in the registers for the active set point, that is, the set point determined by the state of the FSP-OP bit (MR13 OP[7]). The values in the registers for the inactive set point will be ignored by the device and may be changed without affecting device operation.

Micron Technology, Inc. reserves the right to change products or specifications without notice.
© 2017 Micron Technology, Inc. All rights reserved.

Table 24: Burst Sequence for Read

C4	C3	C2	C1	C0	1	2	3	4	5	6	7	8	9	10	11	12	13	14	15	16	17	18	19	20	21	22	23	24	25	26	27	28	29	30	31	32
16-Bit READ Operation																																				
V	**0**	**0**	**0**	**0**	0	1	2	3	4	5	6	7	8	9	A	B	C	D	E	F																
V	**0**	**1**	**0**	**0**	4	5	6	7	8	9	A	B	C	D	E	F	0	1	2	3																
V	**1**	**0**	**0**	**0**	8	9	A	B	C	D	E	F	0	1	2	3	4	5	6	7																
V	**1**	**1**	**0**	**0**	C	D	E	F	0	1	2	3	4	5	6	7	8	9	A	B																
32-Bit READ Operation																																				
0	**0**	**0**	**0**	**0**	0	1	2	3	4	5	6	7	8	9	A	B	C	D	E	F	10	11	12	13	14	15	16	17	18	19	1A	1B	1C	1D	1E	1F
0	**0**	**1**	**0**	**0**	4	5	6	7	8	9	A	B	C	D	E	F	0	1	2	3	14	15	16	17	18	19	1A	1B	1C	1D	1E	1F	10	11	12	13
0	**1**	**0**	**0**	**0**	8	9	A	B	C	D	E	F	0	1	2	3	4	5	6	7	18	19	1A	1B	1C	1D	1E	1F	10	11	12	13	14	15	16	17
0	**1**	**1**	**0**	**0**	C	D	E	F	0	1	2	3	4	5	6	7	8	9	A	B	1C	1D	1E	1F	10	11	12	13	14	15	16	17	18	19	1A	1B
1	**0**	**0**	**0**	**0**	10	11	12	13	14	15	16	17	18	19	1A	1B	1C	1D	1E	1F	0	1	2	3	4	5	6	7	8	9	A	B	C	D	E	F
1	**0**	**1**	**0**	**0**	14	15	16	17	18	19	1A	1B	1C	1D	1E	1F	10	11	12	13	4	5	6	7	8	9	A	B	C	D	E	F	0	1	2	3
1	**1**	**0**	**0**	**0**	18	19	1A	1B	1C	1D	1E	1F	10	11	12	13	14	15	16	17	8	9	A	B	C	D	E	F	0	1	2	3	4	5	6	7
1	**1**	**1**	**0**	**0**	1C	1D	1E	1F	10	11	12	13	14	15	16	17	18	19	1A	1B	C	D	E	F	0	1	2	3	4	5	6	7	8	9	A	B

Notes:
1. C[1:0] are not present on the CA bus; they are implied to be zero.
2. The starting burst address is on 64-bit (4*n*) boundaries.

Table 25: Burst Sequence for Write

C4	C3	C2	C1	C0	1	2	3	4	5	6	7	8	9	10	11	12	13	14	15	16	17	18	19	20	21	22	23	24	25	26	27	28	29	30	31	32
16-Bit WRITE Operation																																				
V	**0**	**0**	**0**	**0**	0	1	2	3	4	5	6	7	8	9	A	B	C	D	E	F																
32-Bit WRITE Operation																																				
0	**0**	**0**	**0**	**0**	0	1	2	3	4	5	6	7	8	9	A	B	C	D	E	F	10	11	12	13	14	15	16	17	18	19	1A	1B	1C	1D	1E	1F

Notes:
1. C[1:0] are not present on the CA bus; they are implied to be zero.
2. The starting burst address is on 256-bit (16*n*) boundaries for burst length 16.
3. The starting burst address is on 512-bit (32*n*) boundaries for burst length 32.
4. C[3:2] must be set to 0 for all WRITE operations.

Micron Technology, Inc. reserves the right to change products or specifications without notice.
© 2017 Micron Technology, Inc. All rights reserved.

Table 26: MR2 Device Feature 2 (MA[5:0] = 02h)

OP7	OP6	OP5	OP4	OP3	OP2	OP1	OP0
WR Lev	WLS	WL			RL		

Table 27: MR2 Op-Code Bit Definitions

Feature	Type	OP	Definition	Notes
RL READ latency	Write-only	OP[2:0]	RL and *n*RTP for DBI-RD disabled (MR3 OP[6] = 0b) 000b: RL = 6, *n*RTP = 8 (default) 001b: RL = 10, *n*RTP = 8 010b: RL = 14, *n*RTP = 8 011b: RL = 20, *n*RTP = 8 100b: RL = 24, *n*RTP = 10 101b: RL = 28, *n*RTP = 12 110b: RL = 32, *n*RTP = 14 111b: RL = 36, *n*RTP = 16	1, 3, 4
			RL and *n*RTP for DBI-RD enabled (MR3 OP[6] = 1b) 000b: RL = 6, *n*RTP = 8 001b: RL = 12,*n*RTP = 8 010b: RL = 16, *n*RTP = 8 011b: RL = 22, *n*RTP = 8 100b: RL = 28, *n*RTP = 10 101b: RL = 32, *n*RTP = 12 110b: RL = 36, *n*RTP = 14 111b: RL = 40, *n*RTP = 16	

Micron Technology, Inc. reserves the right to change products or specifications without notice.
© 2017 Micron Technology, Inc. All rights reserved.

Table 27: MR2 Op-Code Bit Definitions (Continued)

Feature	Type	OP	Definition	Notes
WL WRITE latency	Write-only	OP[5:3]	WL set A (MR2 OP[6] = 0b) 000b: WL = 4 (default) 001b: WL = 6 010b: WL = 8 011b: WL = 10 100b: WL = 12 101b: WL = 14 110b: WL = 16 111b: WL = 18	1, 3, 4
			WL set B (MR2 OP[6] = 1b) 000b: WL = 4 001b: WL = 8 010b: WL = 12 011b: WL = 18 100b: WL = 22 101b: WL = 26 110b: WL = 30 111b: WL = 34	
WLS WRITE latency set	Write-only	OP[6]	0b: Use WL set A (default) 1b: Use WL set B	1, 3, 4
WR Lev Write leveling	Write-only	OP[7]	0b: Disable write leveling (default) 1b: Enable write leveling	2

Notes:
1. See Latency Code Frequency Table for allowable frequency ranges for RL/WL/*n*WR.
2. After an MRW command to set the write leveling enable bit (OP[7] = 1b), the device remains in the MRW state until another MRW command clears the bit (OP[7] = 0b). No other commands are allowed until the write leveling enable bit is cleared.
3. There are two physical registers assigned to each bit of this MR parameter: designated set point 0 and set point 1. Only the registers for the set point determined by the state of the FSP-WR bit (MR13 OP[6]) will be written to with an MRW command this MR address, or read from with an MRR command to this address.
4. There are two physical registers assigned to each bit of this MR parameter: designated set point 0 and set point 1. The device will operate only according to the values stored in the registers for the active set point, that is, the set point determined by the state of the FSP-OP bit (MR13 OP[7]). The values in the registers for the inactive set point will be ignored by the device and may be changed without affecting device operation.
5. *n*RTP is valid for BL16 only. For BL32, the SDRAM will add 8 clocks to the *n*RTP value before starting a precharge.

Micron Technology, Inc. reserves the right to change products or specifications without notice.
© 2017 Micron Technology, Inc. All rights reserved.

Table 28: Frequency Ranges for RL, WL, *n*WR, and *n*RTP Settings

READ Latency		WRITE Latency				Lower Frequency Limit (>)	Upper Frequency Limit(≤)	Units	Notes
No DBI	w/DBI	Set A	Set B	*n*WR	*n*RTP				
6	6	4	4	6	8	10	266	MHz	1–6
10	12	6	8	10	8	266	533		
14	16	8	12	16	8	533	800		
20	22	10	18	20	8	800	1066		
24	28	12	22	24	10	1066	1333		
28	32	14	26	30	12	1333	1600		
32	36	16	30	34	14	1600	1866		
36	40	18	34	40	16	1866	2133		

Notes:
1. The device should not be operated at a frequency above the upper frequency limit or below the lower frequency limit shown for each RL, WL, or *n*WR value.
2. DBI for READ operations is enabled in MR3 OP[6]. When MR3 OP[6] = 0, then the "No DBI" column should be used for READ latency. When MR3 OP[6] = 1, then the "w/DBI" column should be used for READ latency.
3. WRITE latency set A and set B are determined by MR2 OP[6]. When MR2 OP[6] = 0, then WRITE latency set A should be used. When MR2 OP[6] = 1, then WRITE latency set B should be used.
4. The programmed value for *n*RTP is the number of clock cycles the device uses to determine the starting point of an internal PRECHARGE operation after a READ burst with AP (auto precharge) enabled . It is determined by RU(^{t}RTP/^{t}CK).
5. The programmed value of *n*WR is the number of clock cycles the device uses to determine the starting point of an internal PRECHARGE operation after a WRITE burst with AP (auto precharge) enabled. It is determined by RU(^{t}WR/^{t}CK).
6. *n*RTP shown in this table is valid for BL16 only. For BL32, the device will add 8 clocks to the *n*RTP value before starting a precharge.

Table 29: MR3 I/O Configuration 1 (MA[5:0] = 03h)

OP7	OP6	OP5	OP4	OP3	OP2	OP1	OP0
DBI-WR	DBI-RD	PDDS			PPRP	WR-PST	PU-CAL

Micron Technology, Inc. reserves the right to change products or specifications without notice.
© 2017 Micron Technology, Inc. All rights reserved.

Table 30: MR3 Op-Code Bit Definitions

Feature	Type	OP	Definition	Notes
PU-CAL (Pull-up calibration point)	Write-only	OP[0]	0b: V_{DDQ} × 0.6	1–4
			1b: V_{DDQ} × 0.5 (default)	
WR-PST (WR postamble length)		OP[1]	0b: WR postamble = 0.5 × ^{t}CK (default)	2, 3, 5
			1b: WR postamble = 1.5 × ^{t}CK	
PPRP (Post-package repair protection)		OP[2]	0b: PPR protection disabled (default)	6
			1b: PPR protection enabled	
PDDS (Pull-down drive strength)		OP[5:3]	000b: RFU	1, 2, 3
			001b: R_{ZQ}/1	
			010b: R_{ZQ}/2	
			011b: R_{ZQ}/3	
			100b: R_{ZQ}/4	
			101b: R_{ZQ}/5	
			110b: R_{ZQ}/6 (default)	
			111b: Reserved	
DBI-RD (DBI-read enable)		OP[6]	0b: Disabled (default)	2, 3
			1b: Enabled	
DBI-WR (DBI-write enable)		OP[7]	0b: Disabled (default)	2, 3
			1b: Enabled	

Notes:
1. All values are typical. The actual value after calibration will be within the specified tolerance for a given voltage and temperature. Recalibration may be required as voltage and temperature vary.
2. There are two physical registers assigned to each bit of this MR parameter: designated set point 0 and set point 1. Only the registers for the set point determined by the state of the FSP-WR bit (MR13 OP[6]) will be written to with an MRW command to this MR address, or read from with an MRR command to this address.
3. There are two physical registers assigned to each bit of this MR parameter: designated set point 0 and set point 1.The device will operate only according to the values stored in the registers for the active set point, for example, the set point determined by the state of the FSP-OP bit (MR13 OP[7]). The values in the registers for the inactive set point will be determined by the state of the FSP-OP bit (MR13 OP[7]). The values in the registers for the inactive set point will be ignored by the device, and may be changed without affecting device operation.
4. For dual-channel device, PU-CAL (MR3-OP[0]) must be set the same for both channels on a die. The SDRAM will read the value of only one register (Ch.A or Ch.B); the choice is vendor-specific, so both channels must be set the same.
5. 1.5 × ^{t}CK apply > 1.6 GHz clock.
6. If MR3 OP[2] is set to 1b, PPR protection mode is enabled. The PPR protection bit is a sticky bit and can only be set to 0b by a power on reset. MR4 OP[4] controls entry to PPR mode. If PPR protection is enabled then the DRAM will not allow writing of 1b to MR4 OP[4].

Micron Technology, Inc. reserves the right to change products or specifications without notice.
© 2017 Micron Technology, Inc. All rights reserved.

Table 31: MR4 Device Temperature (MA[5:0] = 04h)

OP7	OP6	OP5	OP4	OP3	OP2	OP1	OP0
TUF	Thermal offset		PPRE	SR abort	Refresh rate		

Table 32: MR4 Op-Code Bit Definitions

Feature	Type	OP	Definition	Notes
Refresh rate	Read-only	OP[2:0]	000b: SDRAM low temperature operating limit exceeded 001b: 4x refresh 010b: 2x refresh 011b: 1x refresh (default) 100b: 0.5x refresh 101b: 0.25x refresh, no derating 110b: 0.25x refresh, with derating 111b: SDRAM high temperature operating limit exceeded	1–4, 7–9
SR abort (Self refresh abort)	Write	OP[3]	0b: Disable (default) 1b: Device dependent	9
PPRE (Post-package repair entry/exit)	Write	OP[4]	0b: Exit PPR mode (default) 1b: Enter PPR mode (Reference MR25 OP[7:0] for available PPR resources)	5, 9
Thermal offset-controller offset to TCSR	Write	OP[6:5]	00b: No offset, 0~5°C gradient (default) 01b: 5°C offset, 5~10°C gradient 10b: 10°C offset, 10~15°C gradient 11b: Reserved	9
TUF (Temperature update flag)	Read-only	OP7	0b: OP[2:0] No change in OP[2:0] since last MR4 read (default) 1b: Change in OP[2:0] since last MR4 read	6–8

Notes:
1. The refresh rate for each MR4 OP[2:0] setting applies to ^{t}REFI, ^{t}REFIpb, and ^{t}REFW. MR4 OP[2:0] = 011b corresponds to a device temperature of 85°C. Other values require either a longer (2x, 4x) refresh interval at lower temperatures or a shorter (0.5x, 0.25x) refresh interval at higher temperatures. If MR4 OP[2] = 1b, the device temperature is greater than 85°C.
2. At higher temperatures (>85°C), AC timing derating may be required. If derating is required the device will set MR4 OP[2:0] = 110b. See derating timing requirements in the AC Timing section.
3. DRAM vendors may or may not report all of the possible settings over the operating temperature range of the device. Each vendor guarantees that their device will work at any temperature within the range using the refresh interval requested by their device.
4. The device may not operate properly when MR4 OP[2:0] = 000b or 111b.
5. Post-package repair can be entered or exited by writing to MR4 OP[4].
6. When MR4 OP[7] = 1b, the refresh rate reported in MR4 OP[2:0] has changed since the last MR4 read. A mode register read from MR4 will reset MR4 OP[7] to 0b.

Micron Technology, Inc. reserves the right to change products or specifications without notice.
© 2017 Micron Technology, Inc. All rights reserved.

7. MR4 OP[7] = 0b at power-up. MR4 OP[2:0] bits are valid after initialization sequence (Te).
8. See the Temperature Sensor section for information on the recommended frequency of reading MR4.
9. MR4 OP[6:3] can be written in this register. All other bits will be ignored by the device during an MRW command to this register.

Table 33: MR5 Basic Configuration 1 (MA[5:0] = 05h)

OP7	OP6	OP5	OP4	OP3	OP2	OP1	OP0
Manufacturer ID							

Table 34: MR5 Op-Code Bit Definitions

Feature	Type	OP	Definition
Manufacturer ID	Read-only	OP[7:0]	1111 1111b : Micron All others: Reserved

Table 35: MR6 Basic Configuration 2 (MA[5:0] = 06h)

OP7	OP6	OP5	OP4	OP3	OP2	OP1	OP0
Revision ID1							

Note: 1. MR6 is vendor-specific.

Table 36: MR6 Op-Code Bit Definitions

Feature	Type	OP	Definition
Revision ID1	Read-only	OP[7:0]	xxxx xxxxb: Revision ID1

Note: 1. MR6 is vendor-specific.

Table 37: MR7 Basic Configuration 3 (MA[5:0] = 07h)

OP7	OP6	OP5	OP4	OP3	OP2	OP1	OP0
Revision ID2							

Table 38: MR7 Op-Code Bit Definitions

Feature	Type	OP	Definition
Revision ID2	Read-only	OP[7:0]	xxxx xxxxb: Revision ID2

Note: 1. MR7 is vendor-specific.

Micron Technology, Inc. reserves the right to change products or specifications without notice.
© 2017 Micron Technology, Inc. All rights reserved.

Table 39: MR8 Basic Configuration 4 (MA[5:0] = 08h)

OP7	OP6	OP5	OP4	OP3	OP2	OP1	OP0
I/O width		Density				Type	

Table 40: MR8 Op-Code Bit Definitions

Feature	Type	OP	Definition
Type	Read-only	OP[1:0]	00b: S16 SDRAM (16*n* prefetch) All others: Reserved
Density	Read-only	OP[5:2]	0000b: 4Gb dual-channel die/2Gb single-channel die 0001b: 6Gb dual-channel die/3Gb single-channel die 0010b: 8Gb dual-channel die/4Gb single-channel die 0011b: 12Gb dual-channel die/6Gb single-channel die 0100b: 16Gb dual-channel die/8Gb single-channel die 0101b: 24Gb dual-channel die/12Gb single-channel die 0110b: 32Gb dual-channel die/16Gb single-channel die 1100b: 2Gb dual-channel die/1Gb single-channel die All others: Reserved
I/O width	Read-only	OP[7:6]	00b: x16/channel 01b: x8/channel All others: Reserved

Table 41: MR9 Test Mode (MA[5:0] = 09h)

OP7	OP6	OP5	OP4	OP3	OP2	OP1	OP0
Vendor-specific test mode							

Table 42: MR9 Op-Code Definitions

Feature	Type	OP	Definition
Test mode	Write-only	OP[7:0]	0000000b; Vendor-specific test mode disabled (default)

Table 43: MR10 Calibration (MA[5:0] = 0Ah)

OP7	OP6	OP5	OP4	OP3	OP2	OP1	OP0
RFU							ZQ RESET

Micron Technology, Inc. reserves the right to change products or specifications without notice.
© 2017 Micron Technology, Inc. All rights reserved.

Table 44: MR10 Op-Code Bit Definitions

Feature	Type	OP	Definition
ZQ reset	Write-only	OP[0]	0b: Normal operation (default) 1b: ZQ reset

Notes:
1. See AC Timing table for calibration latency and timing.
2. If ZQ is connected to V_{DDQ} through R_{ZQ}, either the ZQ CALIBRATION function or default calibration (via ZQ reset) is supported. If ZQ is connected to V_{SS}, the device operates with default calibration and ZQ CALIBRATION commands are ignored. In both cases, the ZQ connection must not change after power is supplied to the device.

Table 45: MR11 ODT Control (MA[5:0] = 0Bh)

OP7	OP6	OP5	OP4	OP3	OP2	OP1	OP0
RFU	CA ODT			RFU	DQ ODT		

Table 46: MR11 Op-Code Bit Definitions

Feature	Type	OP	Definition	Notes
DQ ODT DQ bus receiver on-die termination	Write-only	OP[2:0]	000b: Disable (default) 001b: RZQ/1 010b: RZQ/2 011b: RZQ/3 100b: RZQ/4 101b: RZQ/5 110b: RZQ/6 111b: RFU	1, 2, 3
CA ODT CA bus receiver on-die termination	Write-only	OP[6:4]	000b: Disable (default) 001b: RZQ/1 010b: RZQ/2 011b: RZQ/3 100b: RZQ/4 101b: RZQ/5 110b: RZQ/6 111b: RFU	1, 2, 3

Notes:
1. All values are typical. The actual value after calibration will be within the specified tolerance for a given voltage and temperature. Re-calibration may be required as voltage and temperature vary.
2. There are two physical registers assigned to each bit of this MR parameter: designated set point 0 and set point 1. Only the registers for the set point determined by the state of the FSP-WR bit (MR13 OP[6]) will be written to with an MRW command to this MR address, or read from with an MRR command to this address.
3. There are two physical registers assigned to each bit of this MR parameter: designated set point 0 and set point 1. The device will operate only according to the values stored

Micron Technology, Inc. reserves the right to change products or specifications without notice.
© 2017 Micron Technology, Inc. All rights reserved.

in the registers for the active set point, for example, the set point determined by the state of the FSP-OP bit (MR13 OP[7]). The values in the registers for the inactive set point will be ignored by the device and may be changed without affecting device operation.

Table 47: MR12 Register Information (MA[5:0] = 0Ch)

OP7	OP6	OP5	OP4	OP3	OP2	OP1	OP0
RFU	VR_{CA}	$V_{REF(CA)}$					

Table 48: MR12 Op-Code Bit Definitions

Feature	Type	OP	Data	Notes
$V_{REF(CA)}$ $V_{REF(CA)}$ settings	Read/ Write	OP[5:0]	000000b–110010b: See V_{REF} Settings table All others: Reserved	1–3, 5, 6
VR_{CA} $V_{REF(CA)}$ range	Read/ Write	OP[6]	0b: $V_{REF(CA)}$ range[0] enabled 1b: $V_{REF(CA)}$ range[1] enabled (default)	1, 2, 4, 5, 6

Notes:
1. This register controls the $V_{REF(CA)}$ levels for frequency set point[1:0]. Values from either VR(ca)[0] or VR(ca)[1] may be selected by setting MR12 OP[6] appropriately.
2. A read to MR12 places the contents of OP[7:0] on DQ[7:0]. Any RFU bits and unused DQ will be set to 0. See the MRR Operation section.
3. A write to MR12 OP[5:0] sets the internal $V_{REF(CA)}$ level for FSP[0] when MR13 OP[6] = 0b or sets the internal $V_{REF(CA)}$ level for FSP[1] when MR13 OP[6] = 1b. The time required for $V_{REF(CA)}$ to reach the set level depends on the step size from the current level to the new level. See the $V_{REF(CA)}$ training section.
4. A write to MR12 OP[6] switches the device between two internal $V_{REF(CA)}$ ranges. The range (range[0] or range[1]) must be selected when setting the $V_{REF(CA)}$ register. The value, once set, will be retained until overwritten or until the next power-on or reset event.
5. There are two physical registers assigned to each bit of this MR parameter: designated set point 0 and set point 1. Only the registers for the set point determined by the state of the FSP-WR bit (MR13 OP[6]) will be written to with an MRW command to this MR address, or read from with an MRR command to this address.
6. There are two physical registers assigned to each bit of this MR parameter: designated set point 0 and set point 1. The device will operate only according to the values stored in the registers for the active set point, for example, the set point determined by the state of the FSP-OP bit (MR13 OP[7]). The values in the registers for the inactive set point will be ignored by the device, and may be changed without affecting device operation.

Table 49: MR13 Register Control (MA[5:0] = 0Dh)

OP[7]	OP[6]	OP[5]	OP[4]	OP[3]	OP[2]	OP[1]	OP[0]
FSP-OP	FSP-WR	DMD	RRO	VRCG	VRO	RPT	CBT

Micron Technology, Inc. reserves the right to change products or specifications without notice.
© 2017 Micron Technology, Inc. All rights reserved.

Table 50: MR13 Op-Code Bit Definition

Feature	Type	OP	Definition	Notes
CBT Command bus training	Write-only	OP[0]	0b: Normal operation (default) 1b: Command bus training mode enabled	1
RPT Read preamble training		OP[1]	0b: Disabled (default) 1b: Read preamble training mode enabled	
VRO V_{REF} output		OP[2]	0b: Normal operation (default) 1b: Output the $V_{REF(CA)}$ and $V_{REF(DQ)}$ values on DQ bits	2
VRCG V_{REF} current generator		OP[3]	0b: Normal operation (default) 1b: Fast response (high current) mode	3
RRO Refresh rate option		OP[4]	0b: Disable codes 001 and 010 in MR4 OP[2:0] 1b: Enable all codes in MR4 OP[2:0]	4, 5
DMD Data mask disable		OP[5]	0b: DATA MASK operation enabled (default) 1b: DATA MASK operation disabled	6
FSP-WR Frequency set point write/ read		OP[6]	0b: Frequency set point[0] (default) 1b: Frequency set point[1]	7
FSP-OP FREQUENCY SET POINT operation mode		OP[7]	0b: Frequency set point[0] (default) 1b: Frequency set point[1]	8

Notes:
1. A write to set OP[0] = 1 causes the LPDDR4 SDRAM to enter the command bus training mode. When OP[0] = 1 and CKE goes LOW, commands are ignored and the contents of CA[5:0] are mapped to the DQ bus. CKE must be brought HIGH before doing a MRW to clear this bit (OP[0] = 0) and return to normal operation. See the Command Bus Training section for more information.
2. When set, the device will output the $V_{REF(CA)}$ and $V_{REF(DQ)}$ voltage on DQ pins. Only the "active" frequency set point, as defined by MR13 OP[7], will be output on the DQ pins. This function allows an external test system to measure the internal V_{REF} levels. The DQ pins used for V_{REF} output are vendor-specific.
3. When OP[3] = 1, the V_{REF} circuit uses a high current mode to improve V_{REF} settling time.
4. MR13 OP[4] RRO bit is valid only when MR0 OP[0] = 1. For LPDDR4 SDRAM with MR0 OP[0] = 0, MR4 OP[2:0] bits are not dependent on MR13 OP[4].
5. When OP[4] = 0, only 001b and 010b in MR4 OP[2:0] are disabled. LPDDR4 SDRAM must report 011b instead of 001b or 010b in this case. Controller should follow the refresh mode reported by MR4 OP[2:0], regardless of RRO setting. TCSR function does not depend on RRO setting.
6. When enabled (OP[5] = 0b) data masking is enabled for the device. When disabled (OP[5] = 1b), the device will ignore any mask patterns issued during a MASKED WRITE command. See the Data Mask section for more information.
7. FSP-WR determines which frequency set point registers are accessed with MRW and MRR commands for the following functions such as $V_{REF(CA)}$ setting, $V_{REF(CA)}$ range, $V_{REF(DQ)}$ setting, $V_{REF(DQ)}$ range. For more information, refer to Frequency Set Point section.
8. FSP-OP determines which frequency set point register values are currently used to specify device operation for the following functions such as $V_{REF(CA)}$ setting, $V_{REF(CA)}$ range, $V_{REF(DQ)}$ setting, $V_{REF(DQ)}$ range. For more information, refer to Frequency Set Point section.

Micron Technology, Inc. reserves the right to change products or specifications without notice.
© 2017 Micron Technology, Inc. All rights reserved.

Table 51: Mode Register 14 (MA[5:0] = 0Eh)

OP[7]	OP[6]	OP[5]	OP[4]	OP[3]	OP[2]	OP[1]	OP[0]
RFU	VR_{DQ}	$V_{REF(DQ)}$					

Table 52: MR14 Op-Code Bit Definition

Feature	Type	OP	Definition	Notes
$V_{REF(DQ)}$ $V_{REF(DQ)}$ setting	Read/ Write	OP[5:0]	000000b–110010b: See V_{REF} Settings table All others: Reserved	1–3, 5, 6
VR_{DQ} $V_{REF(DQ)}$ range		OP[6]	0b: $V_{REF(DQ)}$ range[0] enabled 1b: $V_{REF(DQ)}$ range[1] enabled (default)	1, 2, 4–6

Notes:
1. This register controls the $V_{REF(DQ)}$ levels for frequency set point[1:0]. Values from either VR_{DQ}[0] (vendor defined) or VR_{DQ}[1] (vendor defined) may be selected by setting OP[6] appropriately.
2. A read (MRR) to this register places the contents of OP[7:0] on DQ[7:0]. Any RFU bits and unused DQ shall be set to 0. See the MRR Operation section.
3. A write to OP[5:0] sets the internal $V_{REF(DQ)}$ level for FSP[0] when MR13 OP[6] = 0b, or sets FSP[1] when MR13 OP[6] = 1b. The time required for $V_{REF(DQ)}$ to reach the set level depends on the step size from the current level to the new level. See the $V_{REF(DQ)}$ training section.
4. A write to OP[6] switches the device between two internal $V_{REF(DQ)}$ ranges. The range (range[0] or range[1]) must be selected when setting the $V_{REF(DQ)}$ register. The value, once set, will be retained until overwritten, or until the next power-on or reset event.
5. There are two physical registers assigned to each bit of this MR parameter: designated set point 0 and set point 1. Only the registers for the set point determined by the state of the FSP-WR bit (MR13 OP[6]) will be written to with an MRW command to this MR address, or read from with an MRR command to this address.
6. There are two physical registers assigned to each bit of this MR parameter: designated set point 0 and set point 1. The device will operate only according to the values stored in the registers for the active set point, for example, the set point determined by the state of the FSP-OP bit (MR13 OP[7]). The values in the registers for the inactive set point will be ignored by the device, and may be changed without affecting device operation.

Micron Technology, Inc. reserves the right to change products or specifications without notice.
© 2017 Micron Technology, Inc. All rights reserved.

Table 53: V_{REF} Setting for Range[0] and Range[1]

Notes 1-3 apply to entire table

Function	OP	Range[0] Values		Range[1] Values	
		$V_{REF(CA)}$ (% of V_{DDQ}) $V_{REF(DQ)}$ (% of V_{DDQ})		$V_{REF(CA)}$ (% of V_{DDQ}) $V_{REF(DQ)}$ (% of V_{DDQ})	
V_{REF} setting for MR12 and MR14	OP[5:0]	000000b: 15.0%	011010b: 30.5%	000000b: 32.9%	011010b: 48.5%
		000001b: 15.6%	011011b: 31.1%	000001b: 33.5%	011011b: 49.1%
		000010b: 16.2%	011100b: 31.7%	000010b: 34.1%	011100b: 49.7%
		000011b: 16.8%	011101b: 32.3%	000011b: 34.7%	011101b: 50.3% (default)
		000100b: 17.4%	011110b: 32.9%	000100b: 35.3%	011110b: 50.9%
		000101b: 18.0%	011111b: 33.5%	000101b: 35.9%	011111b: 51.5%
		000110b: 18.6%	100000b: 34.1%	000110b: 36.5%	100000b: 52.1%
		000111b: 19.2%	100001b: 34.7%	000111b: 37.1%	100001b: 52.7%
		001000b: 19.8%	100010b: 35.3%	001000b: 37.7%	100010b: 53.3%
		001001b: 20.4%	100011b: 35.9%	001001b: 38.3%	100011b: 53.9%
		001010b: 21.0%	100100b: 36.5%	001010b: 38.9%	100100b: 54.5%
		001011b: 21.6%	100101b: 37.1%	001011b: 39.5%	100101b: 55.1%
		001100b: 22.2%	100110b: 37.7%	001100b: 40.1%	100110b: 55.7%
		001101b: 22.8%	100111b: 38.3%	001101b: 40.7%	100111b: 56.3%
		001110b: 23.4%	101000b: 38.9%	001110b: 41.3%	101000b: 56.9%
		001111b: 24.0%	101001b: 39.5%	001111b: 41.9%	101001b: 57.5%
		010000b: 24.6%	101010b: 40.1%	010000b: 42.5%	101010b: 58.1%
		010001b: 25.1%	101011b: 40.7%	010001b: 43.1%	101011b: 58.7%
		010010b: 25.7%	101100b: 41.3%	010010b: 43.7%	101100b: 59.3%
		010011b: 26.3%	101101b: 41.9%	010011b: 44.3%	101101b: 59.9%
		010100b: 26.9%	101110b: 42.5%	010100b: 44.9%	101110b: 60.5%
		010101b: 27.5%	101111b: 43.1%	010101b: 45.5%	101111b: 61.1%
		010110b: 28.1%	110000b: 43.7%	010110b: 46.1%	110000b: 61.7%
		010111b: 28.7%	110001b: 44.3%	010111b: 46.7%	110001b: 62.3%
		011000b: 29.3%	110010b: 44.9%	011000b: 47.3%	110010b: 62.9%
		011001b: 29.9%	All others: Reserved	011001b: 47.9%	All others: Reserved

Notes:
1. These values may be used for MR14 OP[5:0] and MR12 OP[5:0] to set the $V_{REF(CA)}$ or $V_{REF(DQ)}$ levels in the device.
2. The range may be selected in each of the MR14 or MR12 registers by setting OP[6] appropriately.
3. Each of the MR14 or MR12 registers represents either FSP[0] or FSP[1]. Two frequency set points each for CA and DQ are provided to allow for faster switching between terminated and unterminated operation or between different high-frequency settings, which may use different terminations values.

Micron Technology, Inc. reserves the right to change products or specifications without notice.
© 2017 Micron Technology, Inc. All rights reserved.

Table 54: MR15 Register Information (MA[5:0] = 0Fh)

OP[7]	OP[6]	OP[5]	OP[4]	OP[3]	OP[2]	OP[1]	OP[0]
Lower-byte invert register for DQ calibration							

Table 55: MR15 Op-code Bit Definition

Feature	Type	OP	Definition	Notes
Lower-byte invert for DQ calibration	Write-only	OP[7:0]	The following values may be written for any operand OP[7:0] and will be applied to the corresponding DQ locations DQ[7:0] within a byte lane 0b: Do not invert 1b: Invert the DQ calibration patterns in MR32 and MR40 Default value for OP[7:0] = 55h	1–3

Notes:
1. This register will invert the DQ calibration pattern found in MR32 and MR40 for any single DQ or any combination of DQ. Example: If MR15 OP[7:0] = 00010101b, then the DQ calibration patterns transmitted on DQ[7, 6, 5, 3, 1] will not be inverted, but the DQ calibration patterns transmitted on DQ[4, 2, 0] will be inverted.
2. DM[0] is not inverted and always transmits the "true" data contained in MR32 and MR40.
3. No DATA BUS INVERSION (DBI) function is enacted during read DQ calibration, even if DBI is enabled in MR3-OP[6].

Table 56: MR15 Invert Register Pin Mapping

PIN	DQ0	DQ1	DQ2	DQ3	DMIO	DQ4	DQ5	DQ6	DQ7
MR15	OP0	OP1	OP2	OP3	No invert	OP4	OP5	OP6	OP7

Table 57: MR16 PASR Bank Mask (MA[5:0] = 010h)

OP7	OP6	OP5	OP4	OP3	OP2	OP1	OP0
PASR bank mask							

Table 58: MR16 Op-Code Bit Definitions

Feature	Type	OP	Definition
Bank[7:0] mask	Write-only	OP[7:0]	0b: Bank refresh enabled (default) 1b: Bank refresh disabled

OP[n]	Bank Mask	8-Bank SDRAM
0	xxxxxxx1	Bank 0
1	xxxxxx1x	Bank 1
2	xxxxx1xx	Bank 2

Micron Technology, Inc. reserves the right to change products or specifications without notice.
© 2017 Micron Technology, Inc. All rights reserved.

OP[n]	Bank Mask	8-Bank SDRAM
3	xxxx1xxx	Bank 3
4	xxx1xxxx	Bank 4
5	xx1xxxxx	Bank 5
6	x1xxxxxx	Bank 6
7	1xxxxxxx	Bank 7

Notes:
1. When a mask bit is asserted (OP[*n*] = 1), refresh to that bank is disabled.
2. PASR bank masking is on a per-channel basis; the two channels on the die may have different bank masking in dual-channel devices.

Table 59: MR17 PASR Segment Mask (MA[5:0] = 11h)

OP7	OP6	OP5	OP4	OP3	OP2	OP1	OP0
PASR segment mask							

Table 60: MR17 PASR Segment Mask Definitions

Feature	Type	OP	Definition
Segment[7:0] mask	Write-only	OP[7:0]	0b: Segment refresh enabled (default) 1b: Segment refresh disabled

Table 61: MR17 PASR Segment Mask

Segment	OP	Segment Mask	Density (per channel)							
			1Gb	2Gb	3Gb	4Gb	6Gb	8Gb	12Gb	16Gb
			R[12:10]	R[13:11]	R[14:12]	R[14:12]	R[15:13]	R[15:13]	R[16:14]	R[16:14]
0	0	XXXXXXX1	000b							
1	1	XXXXXX1X	001b							
2	2	XXXXX1XX	010b							
3	3	XXXX1XXX	011b							
4	4	XXX1XXXX	100b							
5	5	XX1XXXXX	101b							
6	6	X1XXXXXX	110b	110b	Not allowed	110b	Not allowed	110b	Not allowed	110b
7	7	1XXXXXXX	111b	111b		111b		111b		111b

Notes:
1. This table indicates the range of row addresses in each masked segment. "X" is “Don’t Care” for a particular segment.
2. PASR segment-masking is on a per-channel basis. The two channels on the die may have different segment masking in dual-channel devices.
3. For 3Gb, 6Gb, and 12Gb density per channel, OP[7:6] must always be LOW (= 00b).

Micron Technology, Inc. reserves the right to change products or specifications without notice.
© 2017 Micron Technology, Inc. All rights reserved.

Table 62: MR18 Register Information (MA[5:0] = 12h)

OP7	OP6	OP5	OP4	OP3	OP2	OP1	OP0
DQS oscillator count - LSB							

Table 63: MR18 LSB DQS Oscillator Count

Notes 1–3 apply to entire table

Function	Type	OP	Definition
DQS oscillator count (WR training DQS oscillator)	Read-only	OP[7:0]	0h–FFh LSB DRAM DQS oscillator count

Notes:
1. MR18 reports the LSB bits of the DRAM DQS oscillator count. The DRAM DQS oscillator count value is used to train DQS to the DQ data valid window. The value reported by the DRAM in this mode register can be used by the memory controller to periodically adjust the phase of DQS relative to DQ.
2. Both MR18 and MR19 must be read (MRR) and combined to get the value of the DQS oscillator count.
3. The value in this register is reset each time an MPC command is issued to start in the DQS oscillator counter.

Table 64: MR19 Register Information (MA[5:0] = 13h)

OP7	OP6	OP5	OP4	OP3	OP2	OP1	OP0
DQS oscillator count – MSB							

Table 65: MR19 DQS Oscillator Count

Notes 1–3 apply to the entire table

Function	Type	OP	Definition
DQS oscillator count – MSB (WR training DQS oscillator)	Read-only	OP[7:0]	0h–FFh MSB DRAM DQS oscillator count

Notes:
1. MR19 reports the MSB bits of the DRAM DQS oscillator count. The DRAM DQS oscillator count value is used to train DQS to the DQ data valid window. The value reported by the DRAM in this mode register can be used by the memory controller to periodically adjust the phase of DQS relative to DQ.
2. Both MR18 and MR19 must be read (MRR) and combined to get the value of the DQS oscillator count.
3. A new MPC[START DQS OSCILLATOR] should be issued to reset the contents of MR18/MR19.

Table 66: MR20 Register Information (MA[5:0] = 14h)

OP7	OP6	OP5	OP4	OP3	OP2	OP1	OP0
Upper-byte invert register for DQ calibration							

Micron Technology, Inc. reserves the right to change products or specifications without notice.
© 2017 Micron Technology, Inc. All rights reserved.

Table 67: MR20 Register Information

Notes 1–3 apply to entire table

Function	Type	OP	Definition
Upper-byte invert for DQ calibration	Write-only	OP[7:0]	The following values may be written for any operand OP[7:0] and will be applied to the corresponding DQ locations DQ[15:8] within a byte lane 0b: Do not invert 1b: Invert the DQ calibration patterns in MR32 and MR40 Default value for OP[7:0] = 55h

Notes:
1. This register will invert the DQ calibration pattern found in MR32 and MR40 for any single DQ or any combination of DQ. For example, if MR20 OP[7:0] = 00010101b, the DQ calibration patterns transmitted on DQ[15, 14, 13, 11, 9] will not be inverted, but the DQ calibration patterns transmitted on DQ[12, 10, 8] will be inverted.
2. DM[1] is not inverted and always transmits the true data contained in MR32 and MR40.
3. No DATA BUS INVERSION (DBI) function is enacted during read DQ calibration, even if DBI is enabled in MR3 OP[6].

Table 68: MR20 Invert Register Pin Mapping

Pin	DQ8	DQ9	DQ10	DQ11	DMI1	DQ12	DQ13	DQ14	DQ15
MR20	OP0	OP1	OP2	OP3	No invert	OP4	OP5	OP6	OP7

Table 69: MR21 Register Information (MA[5:0] = 15h)

OP7	OP6	OP5	OP4	OP3	OP2	OP1	OP0
RFU							

Table 70: MR22 Register Information (MA[5:0] = 16h)

OP7	OP6	OP5	OP4	OP3	OP2	OP1	OP0
ODTD for x8_2ch		ODTD-CA	ODTE-CS	ODTE-CK	SOC ODT		

Micron Technology, Inc. reserves the right to change products or specifications without notice.
© 2017 Micron Technology, Inc. All rights reserved.

Table 71: MR22 Register Information

Function	Type	OP	Data	Notes
SOC ODT (controller ODT value for V_{OH} calibration)	Write-only	OP[2:0]	000b: Disable (default) 001b: R_{ZQ}/1 (Illegal if MR3 OP[0] = 0b) 010b: R_{ZQ}/2 011b: R_{ZQ}/3 (Illegal if MR3 OP[0] = 0b) 100b: R_{ZQ}/4 101b: R_{ZQ}/5 (Illegal if MR3 OP[0] = 0b) 110b: R_{ZQ}/6 (Illegal if MR3 OP[0] = 0b) 111b: RFU	1, 2, 3
ODTE-CK (CK ODT enabled for non-terminating rank)	Write-only	OP[3]	ODT bond PAD is ignored 0b: ODT-CK enable (default) 1b: ODT-CK disable	2, 3
ODTE-CS (CS ODT enabled for non-terminating rank)	Write-only	OP[4]	ODT bond PAD is ignored 0b: ODT-CS enable (default) 1b: ODT-CS disable	2, 3
ODTD-CA (CA ODT termination disable)	Write-only	OP[5]	ODT bond PAD is ignored 0b: CA ODT enable (default) 1b: CA ODT disable	2, 3
ODTD for x8_2ch (Byte) mode	Write-only	OP[7:6]	See Byte Mode section	

Notes:
1. All values are typical.
2. There are two physical registers assigned to each bit of this MR parameter: designated set point 0 and set point 1. Only the registers for the set point determined by the state of the FSP-WR bit (MR13 OP[6]) will be written to with an MRW command to this MR address, or read from with an MRR command to this address.
3. There are two physical registers assigned to each bit of this MR parameter: designated set point 0 and set point 1. The device will operate only according to the values stored in the registers for the active set point, for example, the set point determined by the state of the FSP-OP bit (MR13 OP[7]). The values in the registers for the inactive set point will be ignored by the device, and may be changed without affecting device operation.

Table 72: MR23 Register Information (MA[5:0] = 17h)

OP7	OP6	OP5	OP4	OP3	OP2	OP1	OP0
DQS interval timer run-time setting							

Micron Technology, Inc. reserves the right to change products or specifications without notice.
© 2017 Micron Technology, Inc. All rights reserved.

Table 73: MR23 Register Information

Notes 1–2 apply to entire table

Function	Type	OP	Data
DQS interval timer run-time	Write-only	OP[7:0]	00000000b: Disabled (default) 00000001b: DQS timer stops automatically at the 16th clock after timer start 00000010b: DQS timer stops automatically at the 32nd clock after timer start 00000011b: DQS timer stops automatically at the 48th clock after timer start 00000100b: DQS timer stops automatically at the 64th clock after timer start --------- Through --------- 00111111b: DQS timer stops automatically at the (63 × 16)th clock after timer start 01XXXXXXb: DQS timer stops automatically at the 2048th clock after timer start 10XXXXXXb: DQS timer stops automatically at the 4096th clock after timer start 11XXXXXXb: DQS timer stops automatically at the 8192nd clock after timer start

Notes:
1. MPC command with OP[6:0] = 1001101b (STOP DQS INTERVAL OSCILLATOR) stops the DQS interval timer in the case of MR23 OP[7:0] = 00000000b.
2. MPC command with OP[6:0] = 1001101b (STOP DQS INTERVAL OSCILLATOR) is illegal with valid nonzero values in MR23 OP[7:0].

Table 74: MR24 Register Information (MA[5:0] = 18h)

OP7	OP6	OP5	OP4	OP3	OP2	OP1	OP0
TRR mode	TRR mode BAn			Unlimited MAC	MAC value		

Table 75: MR24 Register Information

Function	Type	OP	Data	Notes
MAC value	Read	OP[2:0]	000b: Unknown (OP[3] = 0) or unlimited (OP[3] = 1) 001b: 700K 010b: 600K 011b: 500K 100b: 400K 101b: 300K 110b: 200K 111b: Reserved	1, 2

Micron Technology, Inc. reserves the right to change products or specifications without notice.
© 2017 Micron Technology, Inc. All rights reserved.

Table 75: MR24 Register Information (Continued)

Function	Type	OP	Data	Notes
Unlimited MAC	Read	OP[3]	0b: OP[2:0] defines the MAC value 1b: Unlimited MAC value	2, 3
TRR mode BAn	Write	OP[6:4]	000b: Bank 0 001b: Bank 1 010b: Bank 2 011b: Bank 3 100b: Bank 4 101b: Bank 5 110b: Bank 6 111b: Bank 7	
TRR mode	Write	OP[7]	0b: Disabled (default) 1b: Enabled	

Notes:
1. Unknown means that the device is not tested for ^{t}MAC and pass/fail values are unknown. Unlimited means that there is no restriction on the number of activates between refresh windows.
2. There is no restriction to the number of activates.
3. MR24 OP[2:0] set to 000b.

Table 76: MR25 Register Information (MA[5:0] = 19h)

OP7	OP6	OP5	OP4	OP3	OP2	OP1	OP0
Bank 7	Bank 6	Bank 5	Bank 4	Bank 3	Bank 2	Bank 1	Bank 0

Table 77: MR25 Register Information

Function	Type	OP	Data
PPR resources	Read-only	OP[7:0]	0b: PPR resource is not available 1b: PPR resource is available

Note:
1. When OP[*n*] = 0, there is no PPR resource available for that bank. When OP[*n*] = 1, there is a PPR resource available for that bank, and PPR can be initiated by the controller.

Table 78: MR26:29 Register Information (MA[5:0] = 1Ah–1Dh)

OP7	OP6	OP5	OP4	OP3	OP2	OP1	OP0
Reserved for future use							

Micron Technology, Inc. reserves the right to change products or specifications without notice.
© 2017 Micron Technology, Inc. All rights reserved.

Table 79: MR30 Register Information (MA[5:0] = 1Eh)

OP7	OP6	OP5	OP4	OP3	OP2	OP1	OP0
Valid 0 or 1							

Table 80: MR30 Register Information

Function	Type	OP	Data
SDRAM will ignore	Write-only	OP[7:0]	Don't care

Note: 1. This register is reserved for testing purposes. The logical data values written to OP[7:0] will have no effect on SDRAM operation; however, timings need to be observed as for any other MR access command.

Table 81: MR31 Register Information (MA[5:0] = 1Fh)

OP7	OP6	OP5	OP4	OP3	OP2	OP1	OP0
Reserved for future use							

Table 82: MR32 Register Information (MA[5:0] = 20h)

OP7	OP6	OP5	OP4	OP3	OP2	OP1	OP0
DQ calibration pattern A (default = 5Ah)							

Table 83: MR32 Register Information

Feature	Type	OP	Data	Notes
Return DQ calibration pattern MR32 + MR40	Write-only	OP[7:0]	Xb: An MPC command issued with OP[6:0] = 1000011b causes the device to return the DQ calibration pattern contained in this register and (followed by) the contents of MR40. A default pattern 5Ah is loaded at power-up or reset, or the pattern may be overwritten with a MRW to this register. The contents of MR15 and MR20 will invert the MR32/MR40 data pattern for a given DQ (see MR15/MR20 for more information).	1, 2, 3

Notes:
1. The patterns contained in MR32 and MR40 are transmitted on DQ[15:0] and DMI[1:0] when read DQ calibration is initiated via an MPC command. The pattern is transmitted serially on each data lane and organized little endian such that the low-order bit in a byte is transmitted first. If the data pattern is 27H, the first bit transmitted is a 1 followed by 1, 1, 0, 0, 1, 0, and 0. The bit stream will be 00100111.
2. MR15 and MR20 may be used to invert the MR32/MR40 data pattern on the DQ pins. See MR15 and MR20 for more information. Data is never inverted on the DMI[1:0] pins.
3. The data pattern is not transmitted on the DMI[1:0] pins if DBI-RD is disabled via MR3 OP[6].

Micron Technology, Inc. reserves the right to change products or specifications without notice.
© 2017 Micron Technology, Inc. All rights reserved.

4. No DATA BUS INVERSION (DBI) function is enacted during read DQ calibration, even if DBI is enabled in MR3 OP[6].

Table 84: MR33:38 Register Information (MA[5:0] = 21h–26h)

OP7	OP6	OP5	OP4	OP3	OP2	OP1	OP0
Do not use							

Table 85: MR39 Register Information (MA[5:0] = 27h)

OP7	OP6	OP5	OP4	OP3	OP2	OP1	OP0
Valid 0 or 1							

Table 86: MR39 Register Information

Function	Type	OP	Data
SDRAM will ignore	Write-only	OP[7:0]	Don't care

Note: 1. This register is reserved for testing purposes. The logical data values written to OP[7:0] will have no effect on SDRAM operation; however, timings need to be observed as for any other MR access command.

Table 87: MR40 Register Information (MA[5:0] = 28h)

OP7	OP6	OP5	OP4	OP3	OP2	OP1	OP0
DQ calibration pattern B (default = 3Ch)							

Table 88: MR40 Register Information

Function	Type	OP	Data	Notes
Return DQ calibration pattern MR32 + MR40	Write-only	OP[7:0]	Xb: A default pattern 3Ch is loaded at power-up or reset, or the pattern may be overwritten with a MRW to this register. See MR32 for more information.	1, 2, 3

Notes:
1. The pattern contained in MR40 is concatenated to the end of MR32 and transmitted on DQ[15:0] and DMI[1:0] when read DQ calibration is initiated via an MPC command. The pattern is transmitted serially on each data lane and organized little endian such that the low-order bit in a byte is transmitted first. If the data pattern in MR40 is 27H, the first bit transmitted will be a 1, followed by 1, 1, 0, 0, 1, 0, and 0. The bit stream will be 00100111.
2. MR15 and MR20 may be used to invert the MR32/MR40 data patterns on the DQ pins. See MR15 and MR20 for more information. Data is never inverted on the DMI[1:0] pins.
3. The data pattern is not transmitted on the DMI[1:0] pins if DBI-RD is disabled via MR3 OP[6].
4. No DATA BUS INVERSION (DBI) function is enacted during read DQ calibration, even if DBI is enabled in MR3 OP[6].

Micron Technology, Inc. reserves the right to change products or specifications without notice.
© 2017 Micron Technology, Inc. All rights reserved.

Table 89: MR41:47 Register Information (MA[5:0] = 29h–2Fh)

OP7	OP6	OP5	OP4	OP3	OP2	OP1	OP0
Do not use							

Table 90: MR48:63 Register Information (MA[5:0] = 30h–3Fh)

OP7	OP6	OP5	OP4	OP3	OP2	OP1	OP0
Reserved for future use							

Commands and Timing

Commands transmitted on the CA bus are encoded into two parts and are latched on two consecutive rising edges of the clock. This is called 2-tick CA capture because each command requires two clock edges to latch and decode the entire command.

Truth Tables

Truth tables provide complementary information to the state diagram. They also clarify device behavior and applicable restrictions when considering the actual state of the banks.

Unspecified operations and timings are illegal. To ensure proper operation after an illegal event, the device must be either reset by asserting the RESET_n command or powered down and then restarted using the specified initialization sequence before normal operation can continue.

CKE signal has to be held HIGH when the commands listed in the command truth table input.

Table 91: Command Truth Table

Commands are transmitted to the device across a six-lane interface and use CK, CKE, and CS to control the capture of transmitted data

Command	CS	SDR CA Pins						CK Edge	Notes
		CA0	CA1	CA2	CA3	CA4	CA5		
MRW-1	H	L	H	H	L	L	OP7	↑1	1, 11
	L	MA0	MA1	MA2	MA3	MA4	MA5	↑2	
MRW-2	H	L	H	H	L	H	OP6	↑1	1, 11
	L	OP0	OP1	OP2	OP3	OP4	OP5	↑2	
MRR-1	H	L	H	H	H	L	V	↑1	1, 2, 12
	L	MA0	MA1	MA2	MA3	MA4	MA5	↑2	
REFRESH (all/per bank)	H	L	L	L	H	L	AB	↑1	1, 2, 3, 4
	L	BA0	BA1	BA2	V	V	V	↑2	
ENTER SELF REFRESH	H	L	L	L	H	H	V	↑1	1, 2
	L	V						↑2	

Micron Technology, Inc. reserves the right to change products or specifications without notice.
© 2017 Micron Technology, Inc. All rights reserved.

Table 91: Command Truth Table (Continued)

Commands are transmitted to the device across a six-lane interface and use CK, CKE, and CS to control the capture of transmitted data

Command	CS	SDR CA Pins						CK Edge	Notes
		CA0	CA1	CA2	CA3	CA4	CA5		
ACTIVATE-1	H	H	L	R12	R13	R14	R15	↑1	1, 2, 3, 11
	L	BA0	BA1	BA2	R16	R10	R11	↑2	
ACTIVATE-2	H	H	H	R6	R7	R8	R9	↑1	1, 11
	L	R0	R1	R2	R3	R4	R5	↑2	
WRITE-1	H	L	L	H	L	L	BL	↑1	1, 2, 3, 6, 7, 9
	L	BA0	BA1	BA2	V	C9	AP	↑2	
EXIT SELF RE-FRESH	H	L	L	H	L	H	V	↑1	1, 2
	L	V						↑2	
MASK WRITE-1	H	L	L	H	H	L	BL	↑1	1, 2, 3, 5, 6, 7, 9
	L	BA0	BA1	BA2	V	C9	AP	↑2	
RFU	H	L	L	H	H	H	V	↑1	1, 2
	L	V						↑2	
RFU	H	L	H	L	H	L	V	↑2	1, 2
	L	V						↑2	
RFU	H	L	H	L	H	H	V	↑2	1, 2
	L	V						↑2	
READ-1	H	L	H	L	L	L	BL	↑1	1, 2, 3, 6, 7, 9
	L	BA0	BA1	BA2	V	C9	AP	↑2	
CAS-2 (WRITE-2, MASKED WRITE-2, READ-2, MRR-2, MPC (except NOP)	H	L	H	L	L	H	C8	↑1	1, 8, 9
	L	C2	C3	C4	C5	C6	C7	↑2	
PRECHARGE (all/per bank)	H	L	L	L	L	H	AB	↑1	1, 2, 3, 4
	L	BA0	BA1	BA2	V	V	V	↑2	
MPC (TRAIN, NOP)	H	L	L	L	L	L	OP6	↑1	1, 2, 13
	L	OP0	OP1	OP2	OP3	OP4	OP5	↑2	
DESELECT	L	X						↑1	1, 2

Notes:
1. All commands except for DESELECT are two clock cycles and are defined by the current state of CS and CA[5:0] at the rising edge of the clock. DESELECT command is one clock cycle and is not latched by the device.
2. V = H or L (a defined logic level); X = "Don't Care," in which case CS, CK_t, CK_c, and CA[5:0] can be floated.
3. Bank addresses BA[2:0] determine which bank is to be operated upon.

Micron Technology, Inc. reserves the right to change products or specifications without notice.
© 2017 Micron Technology, Inc. All rights reserved.

4. AB HIGH during PRECHARGE or REFRESH commands indicate the command must be applied to all banks, and the bank addresses are "Don't Care."
5. MASK WRITE-1 command only supports BL16. For MASK WRITE-1 commands, CA5 must be driven LOW on the first rising clock cycle (R1).
6. AP HIGH during a WRITE-1, MASK WRITE-1, or READ-1 command indicates that an auto precharge will occur to the bank the command is operating on. AP LOW indicates that no auto precharge will occur and the bank will remain open upon completion of the command.
7. When enabled in the mode register, BL HIGH during a WRITE-1, MASK-WRITE-1, or READ-1 command indicates the burst length should be set on-the-fly to BL = 32; BL LOW during one of these commands indicates the burst length should be set on-the-fly to BL = 16. If on-the-fly burst length is not enabled in the mode register, this bit should be driven to a valid level and is ignored by the device.
8. For CAS-2 commands (WRITE-2, MASK WRITE-2, READ-2, MRR-2, or MPC (only WRITE-FIFO, READ-FIFO, and READ DQ CALIBRATION)), C[1:0] are not transmitted on the CA [5:0] bus and are assumed to be zero. Note that for CAS-2 WRITE-2 or CAS-2 MASK WRITE-2 command, C[3:2] must be driven LOW.
9. WRITE-1, MASK-WRITE-1, READ-1, MODE REGISTER READ-1, or MPC (only WRITE-FIFO, READ-FIFO, and READ DQ CALIBRATION) command must be immediately followed by CAS-2 command consecutively without any other command in between. WRITE-1, MASK WRITE-1, READ-1, MRR-1, or MPC (only WRITE-FIFO, READ-FIFO, and READ DQ CALIBRATION) command must be issued first before issuing CAS-2 command. MPC (only START and STOP DQS OSCILLATOR, ZQCAL START and LATCH) commands do not require CAS-2 command; they require two additional DES or NOP commands consecutively before issuing any other commands.
10. The ACTIVATE-1 command must be followed by the ACTIVATE-2 command consecutively without any other command between them. The ACTIVATE-1 command must be issued prior to the ACTIVATE-2 command. When the ACTIVATE-1 command is issued, the ACTIVATE-2 command must be issued before issuing another ACTIVATE-1 command.
11. The MRW-1 command must be followed by the MRW-2 command consecutively without any other command between them. The MRW-1 command must be issued prior to the MRW-2 command.
12. The MRR-1 command must be followed by the CAS-2 command consecutively without any other commands between them. The MRR-1 command must be issued prior to the CAS-2 command.
13. The MPC command for READ or WRITE TRAINING operations must be followed by the CAS-2 command consecutively without any other commands between them. The MPC command must be issued prior to the CAS-2 command.

ACTIVATE Command

The ACTIVATE command must be executed before a READ or WRITE command can be issued. The ACTIVATE command is issued in two parts: The bank and upper-row addresses are entered with activate-1 and the lower-row addresses are entered with ACTIVATE-2. ACTIVATE-1 and ACTIVATE-2 are executed by strobing CS HIGH while setting CA[5:0] at valid levels (see Command table) at the rising edge of CK.

The bank addresses (BA[2:0]) are used to select the desired bank. The row addresses (R[15:0]) are used to determine which row to activate in the selected bank. The ACTIVATE-2 command must be applied before any READ or WRITE operation can be executed. The device can accept a READ or WRITE command at time ^{t}RCD after the ACTIVATE-2 command is sent. After a bank has been activated, it must be precharged to close the active row before another ACTIVATE-2 command can be applied to the same

Micron Technology, Inc. reserves the right to change products or specifications without notice.
© 2017 Micron Technology, Inc. All rights reserved.

bank. The bank active and precharge times are defined as ^{t}RAS and ^{t}RP, respectively. The minimum time interval between successive ACTIVATE-2 commands to the same bank is determined by the row cycle time of the device (^{t}RC). The minimum time interval between ACTIVATE-2 commands to different banks is ^{t}RRD.

Certain restrictions must be observed for bank ACTIVATE and REFpb operations.

- Four-activate window (^{t}FAW): No more than 4 banks may be activated (or refreshed, in the case of REFpb) per channel in a rolling ^{t}FAW window. Convert to clocks by dividing ^{t}FAW[ns] by ^{t}CK[ns] and rounding up to the next integer value. As an example of the rolling window, if RU[(^{t}FAW/^{t}CK)] is 64 clocks, and an ACTIVATE command is issued on clock N, no more than three additional ACTIVATE commands may be issued between clock N + 1 and N + 63. REFpb also counts as bank activation for the purposes of ^{t}FAW.
- 8-bank per channel, precharge all banks (AB) allowance: ^{t}RP for a PRECHARGE ALL BANKS command for an 8-bank device must equal ^{t}RPab, which is greater than ^{t}RPpb.

Figure 11: ACTIVATE Command

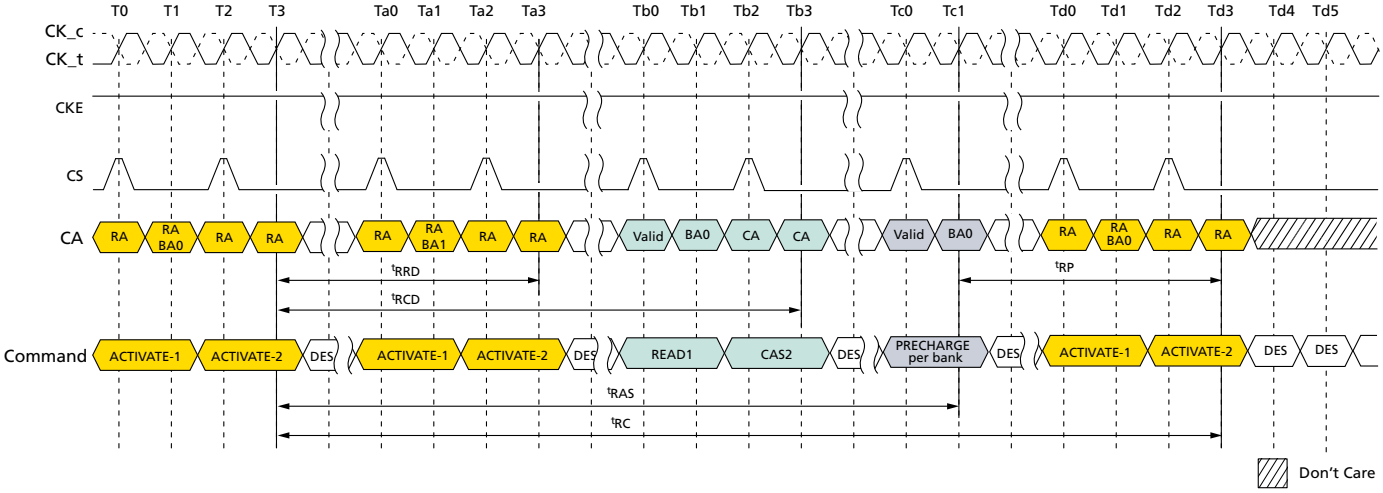

Note: 1. A PRECHARGE command uses ^{t}RPab timing for all-bank precharge and ^{t}RPpb timing for single-bank precharge. In this figure, ^{t}RP is used to denote either all-bank precharge or a single-bank precharge. ^{t}CCD = MIN, 1.5*n*CK postamble, 533 MHz < clock frequency ≤ 800 MHz, ODT worst timing case.

Micron Technology, Inc. reserves the right to change products or specifications without notice.
© 2017 Micron Technology, Inc. All rights reserved.

Figure 12: ^{t}FAW Timing

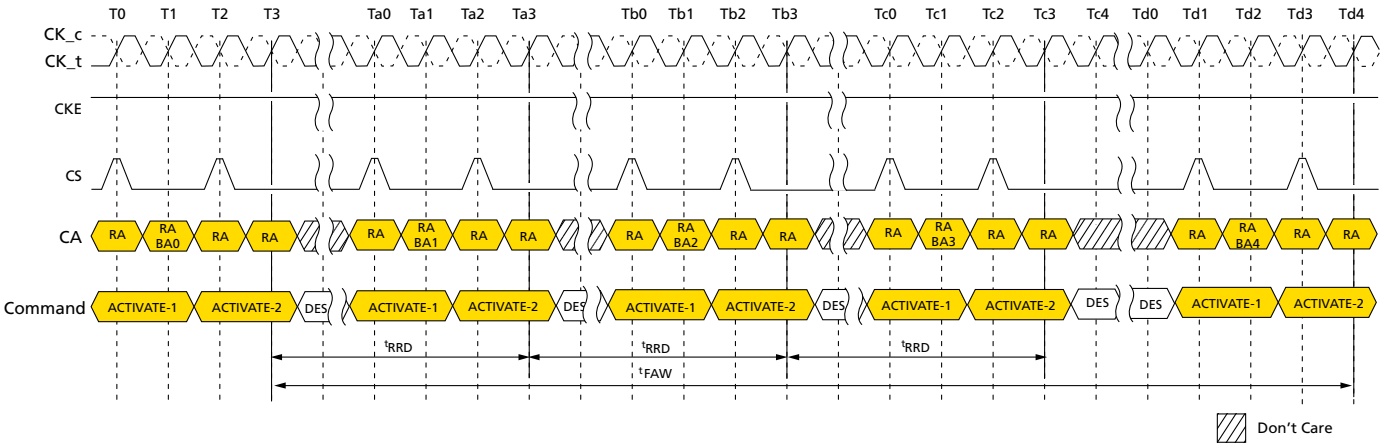

Note: 1. REFpb may be substituted for one of the ACTIVATE commands for the purposes of ^{t}FAW.

Read and Write Access Modes

After a bank has been activated, a READ or WRITE command can be executed. This is accomplished by asserting CKE asynchronously, with CS and CA[5:0] set to the proper state (see Command Truth Table) on the rising edge of CK.

The device provides a fast column access operation. A single READ or WRITE command will initiate a burst READ or WRITE operation, where data is transferred to/from the device on successive clock cycles. Burst interrupts are not allowed; however, the optimal burst length may be set on-the-fly (see Command Truth Table).

Preamble and Postamble

The DQS strobe for the device requires a preamble prior to the first latching edge (the rising edge of DQS_t with data valid), and it requires a postamble after the last latching edge. The preamble and postamble options are set via MODE REGISTER WRITE commands.

The read preamble is two ^{t}CK in length and is either static or has one clock toggle before the first latching edge. The read preamble option is enabled via MRW to MR1 OP[3] (0 = Static; 1 = Toggle).

The read postamble has a programmable option to extend the postamble by 1*n*CK (^{t}RPSTE). The extended postamble option is enabled via MRW to MR1 OP[7] (0 = 0.5*n*CK; 1 = 1.5*n*CK).

Micron Technology, Inc. reserves the right to change products or specifications without notice.
© 2017 Micron Technology, Inc. All rights reserved.

Figure 13: DQS Read Preamble and Postamble – Toggling Preamble and 0.5*n*CK Postamble

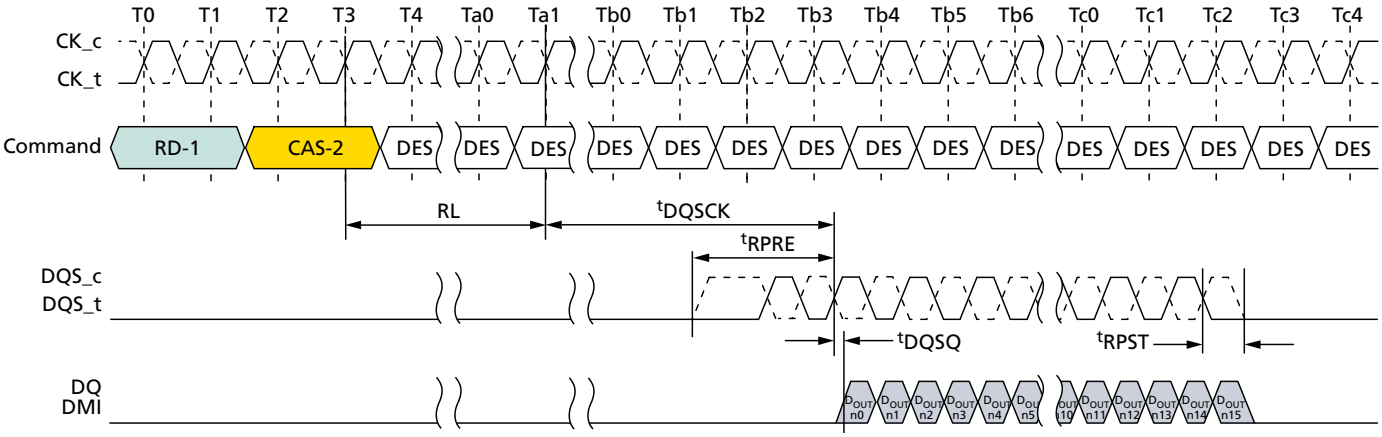

Notes:
1. BL = 16, Preamble = Toggling, Postamble = 0.5*n*CK.
2. DQS and DQ terminated V_{SSQ}.
3. DQS_t/DQS_c is "Don't Care" prior to the start of ^{t}RPRE. No transition of DQS is implied, as DQS_t/DQS_c can be HIGH, LOW, or High-Z prior to ^{t}RPRE.

Figure 14: DQS Read Preamble and Postamble – Static Preamble and 1.5*n*CK Postamble

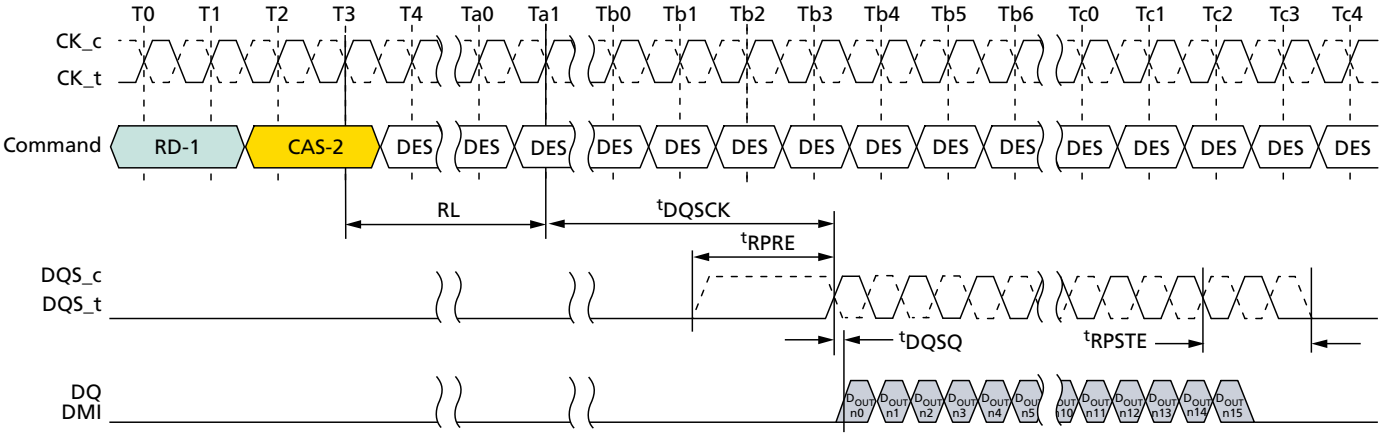

Notes:
1. BL = 16, Preamble = Static, Postamble = 1.5*n*CK (extended).
2. DQS and DQ terminated V_{SSQ}.
3. DQS_t/DQS_c is "Don't Care" prior to the start of ^{t}RPRE. No transition of DQS is implied, as DQS_t/DQS_c can be HIGH, LOW, or High-Z prior to ^{t}RPRE.

Micron Technology, Inc. reserves the right to change products or specifications without notice.
© 2017 Micron Technology, Inc. All rights reserved.

Figure 15: DQS Write Preamble and Postamble – 0.5*n*CK Postamble

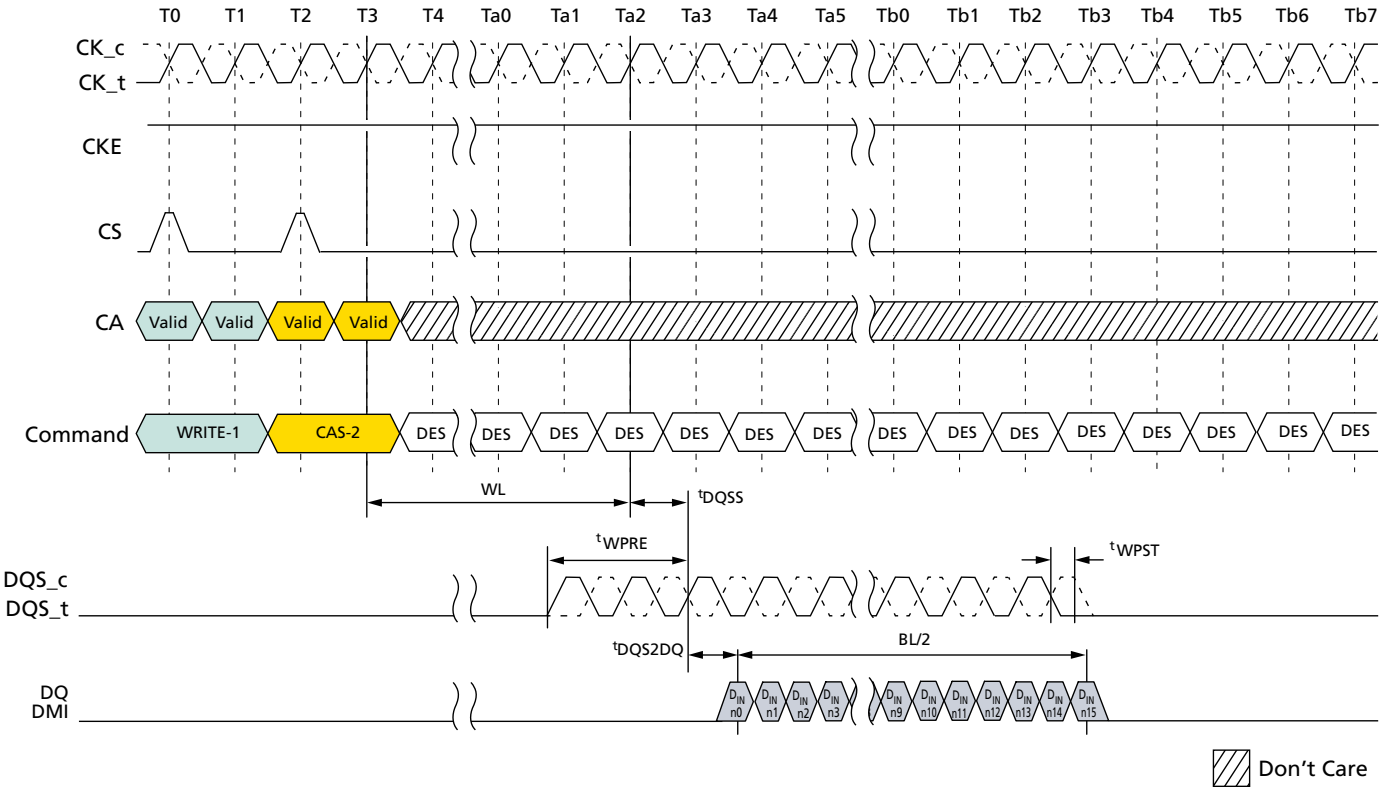

Notes:
1. BL = 16, Postamble = 0.5*n*CK.
2. DQS and DQ terminated V_{SSQ}.
3. DQS_t/DQS_c is "Don't Care" prior to the start of ^{t}WPRE. No transition of DQS is implied, as DQS_t/DQS_c can be HIGH, LOW, or High-Z prior to ^{t}WPRE.

Micron Technology, Inc. reserves the right to change products or specifications without notice.
© 2017 Micron Technology, Inc. All rights reserved.

Figure 16: DQS Write Preamble and Postamble – 1.5*n*CK Postamble

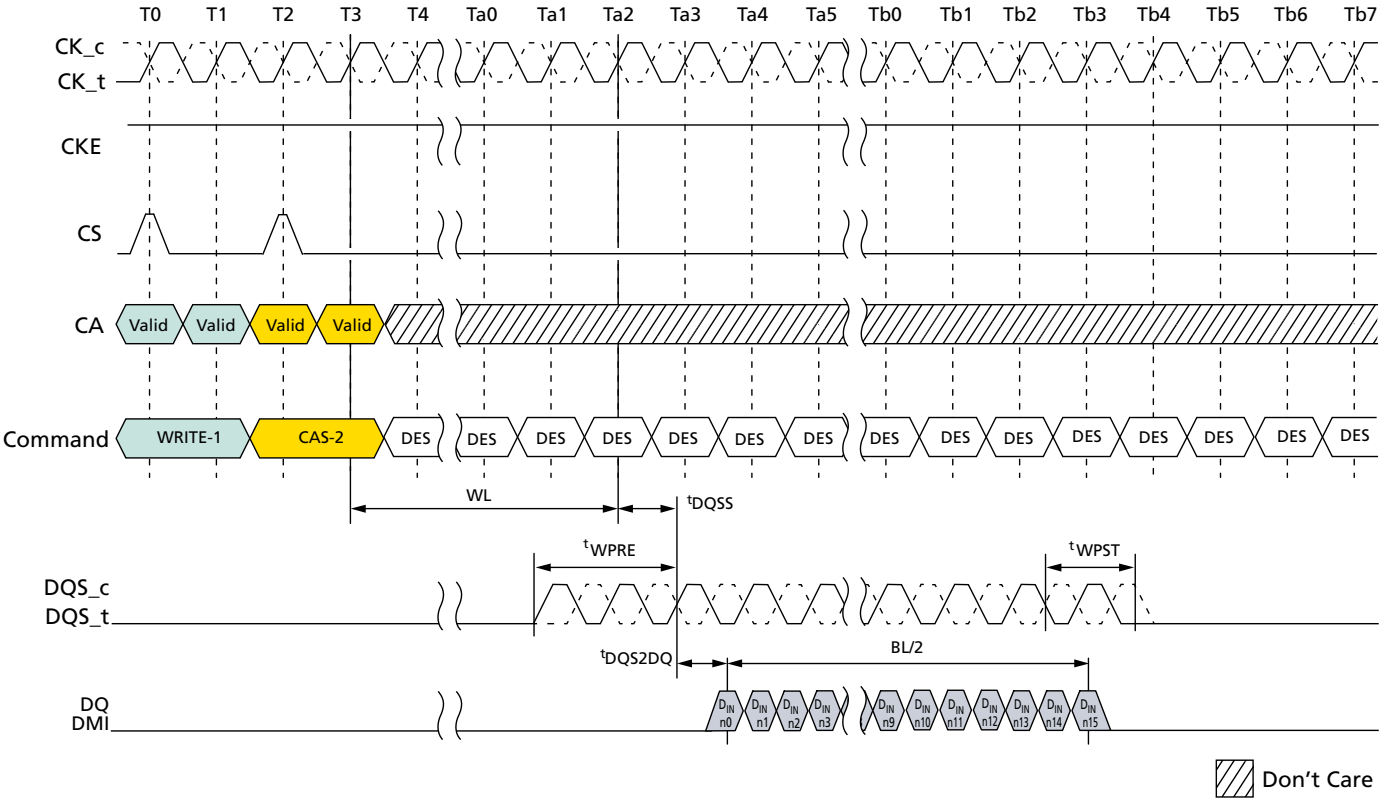

Notes:
1. BL = 16, Postamble = 1.5*n*CK.
2. DQS and DQ terminated V_{SSQ}.
3. DQS_t/DQS_c is "Don't Care" prior to the start of ^{t}WPRE. No transition of DQS is implied, as DQS_t/DQS_c can be HIGH, LOW, or High-Z prior to ^{t}WPRE.

Micron Technology, Inc. reserves the right to change products or specifications without notice.
© 2017 Micron Technology, Inc. All rights reserved.

Burst READ Operation

A burst READ command is initiated with CKE, CS, and CA[5:0] asserted to the proper state on the rising edge of CK, as defined by the Command Truth Table. The command address bus inputs determine the starting column address for the burst. The two low-order address bits are not transmitted on the CA bus and are implied to be 0; therefore, the starting burst address is always a multiple of four (that is, 0x0, 0x4, 0x8, 0xC).

The READ latency (RL) is defined from the last rising edge of the clock that completes a READ command (for example, the second rising edge of the CAS-2 command) to the rising edge of the clock from which the ^{t}DQSCK delay is measured. The first valid data is available RL × ^{t}CK + ^{t}DQSCK + ^{t}DQSQ after the rising edge of clock that completes a READ command.

The data strobe output is driven ^{t}RPRE before the first valid rising strobe edge. The first data bit of the burst is synchronized with the first valid (post-preamble) rising edge of the data strobe. Each subsequent data-out appears on each DQ pin, edge-aligned with the data strobe. At the end of a burst, the DQS signals are driven for another half cycle postamble, or for a 1.5-cycle postamble if the programmable postamble bit is set in the mode register. The RL is programmed in the mode registers. Pin timings for the data strobe are measured relative to the cross-point of DQS_t and DQS_c.

Figure 17: Burst Read Timing

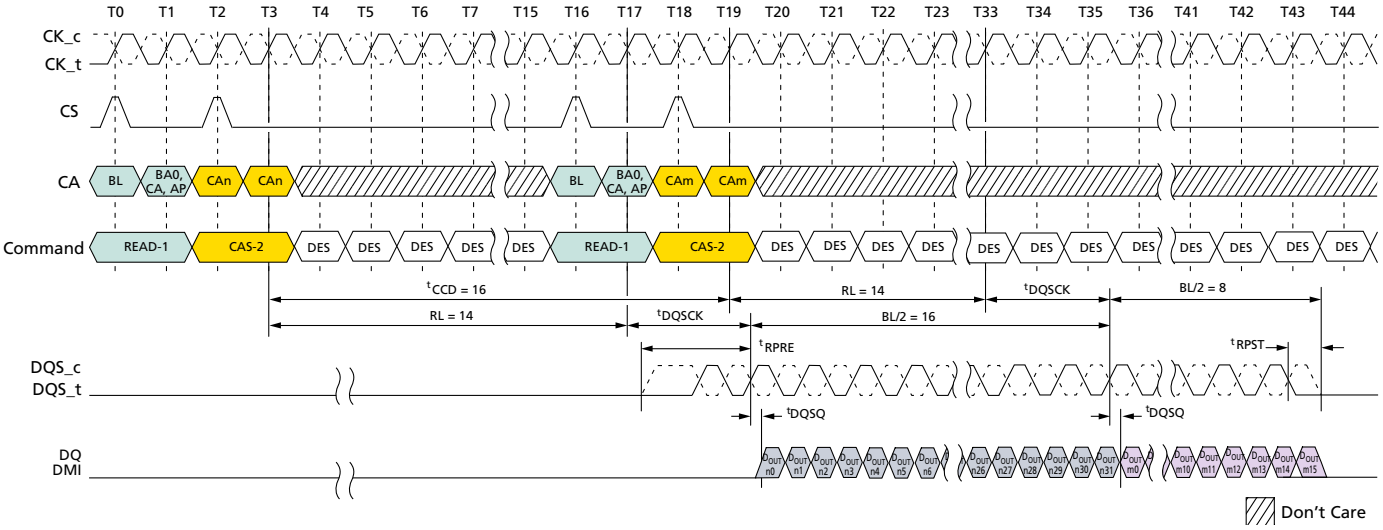

Notes:
1. BL = 32 for column *n*, BL = 16 for column *m*, RL = 14, Preamble = Toggle, Postamble = 0.5*n*CK, DQ/DQS: V_{SSQ} termination.
2. D_{OUT} *n*/*m* = data-out from column *n* and column *m*.
3. DES commands are shown for ease of illustration; other commands may be valid at these times.

Micron Technology, Inc. reserves the right to change products or specifications without notice.
© 2017 Micron Technology, Inc. All rights reserved.

Figure 18: Burst Read Followed by Burst Write or Burst Mask Write

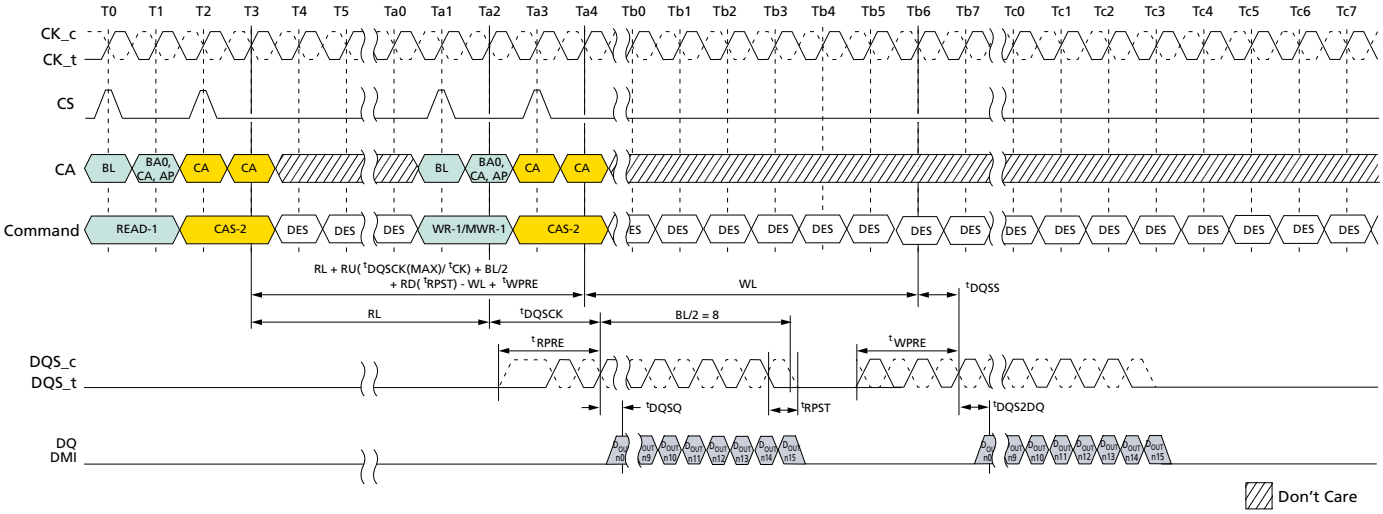

Notes:
1. BL = 16, Read preamble = Toggle, Read postamble = 0.5*n*CK, Write preamble = 2*n*CK, Write postamble = 0.5*n*CK, DQ/DQS: V_{SSQ} termination.
2. D_{OUT} *n* = data-out from column *n* and D_{IN} *n* = data-in to column *n*.
3. DES commands are shown for ease of illustration; other commands may be valid at these times.

Figure 19: Seamless Burst Read

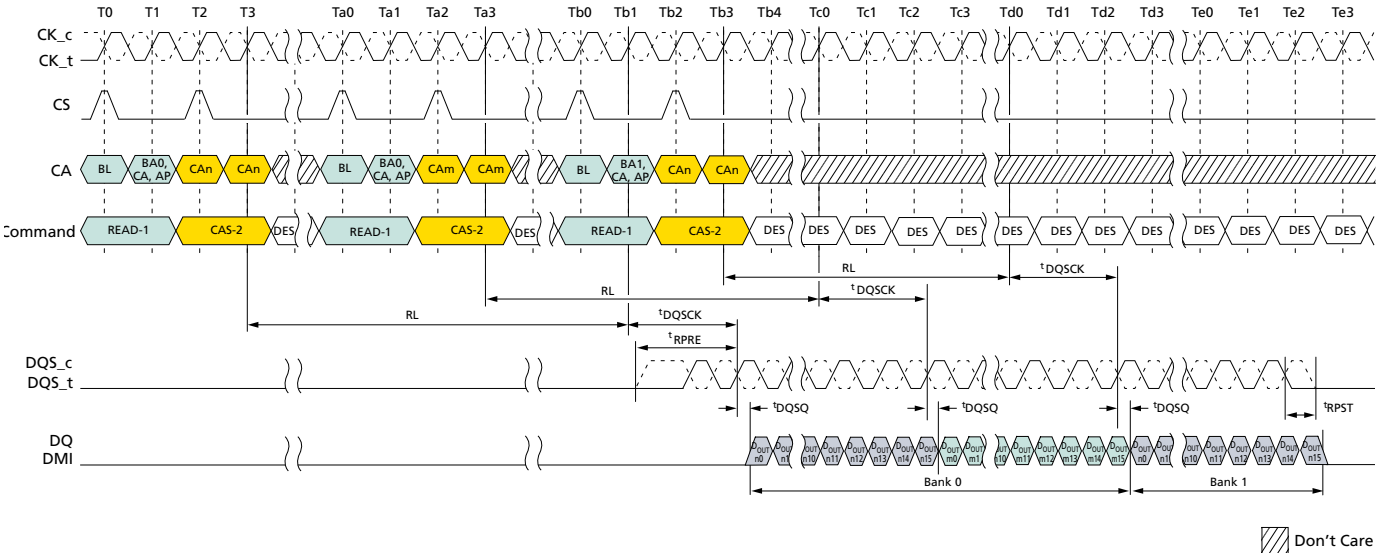

Notes:
1. BL = 16, ^{t}CCD = 8, Preamble = Toggle, Postamble = 0.5*n*CK, DQ/DQS: V_{SSQ} termination.
2. D_{OUT} *n/m* = data-out from column *n* and column *m*.
3. DES commands are shown for ease of illustration; other commands may be valid at these times.

Micron Technology, Inc. reserves the right to change products or specifications without notice.
© 2017 Micron Technology, Inc. All rights reserved.

Read Timing

Figure 20: Read Timing

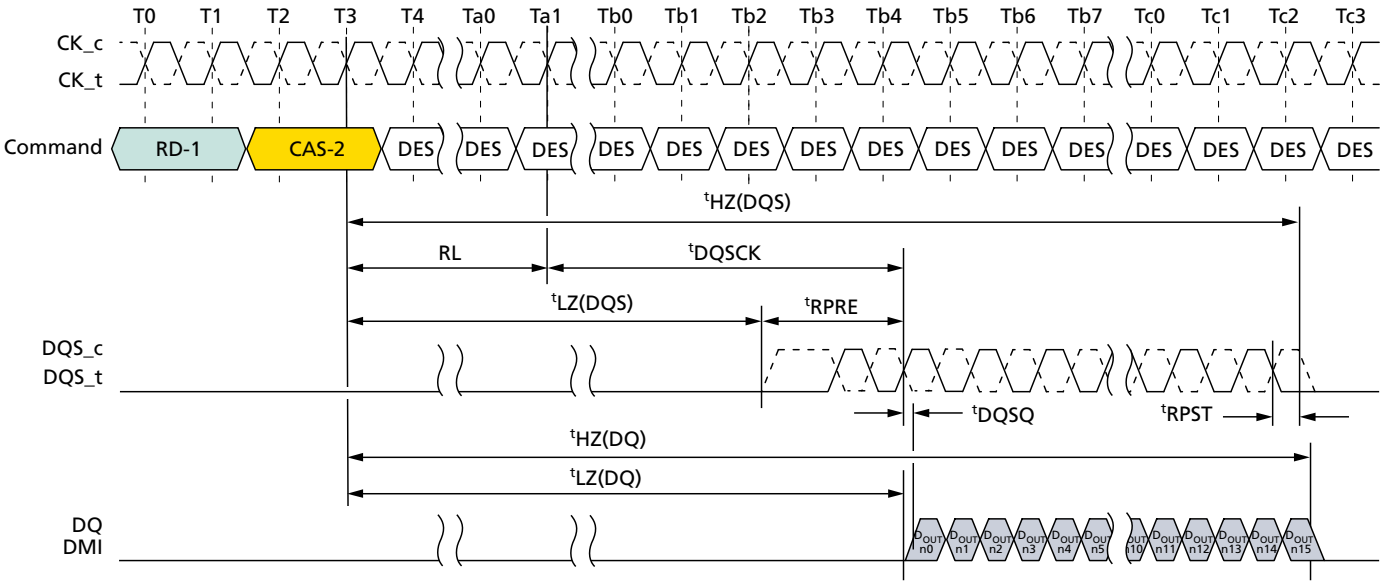

Notes:
1. BL = 16, Preamble = Toggling, Postamble = 0.5*n*CK.
2. DQS, DQ, and DMI terminated V_{SSQ}.
3. Output driver does not turn on before an endpoint of ^{t}LZ(DQS) and ^{t}LZ(DQ).
4. Output driver does not turn off before an endpoint of ^{t}HZ(DQS) and ^{t}HZ(DQ).

^{t}LZ(DQS), ^{t}LZ(DQ), ^{t}HZ(DQS), ^{t}HZ(DQ) Calculation

^{t}HZ and ^{t}LZ transitions occur in the same time window as valid data transitions. These parameters are referenced to a specific voltage level that specifies when the device output is no longer driving ^{t}HZ(DQS) and ^{t}HZ(DQ), or begins driving ^{t}LZ(DQS) and ^{t}LZ(DQ). This section shows a method to calculate the point when the device is no longer driving ^{t}HZ(DQS) and ^{t}HZ(DQ), or begins driving ^{t}LZ(DQS) and ^{t}LZ(DQ), by measuring the signal at two different voltages. The actual voltage measurement points are not critical as long as the calculation is consistent. The parameters ^{t}LZ(DQS), ^{t}LZ(DQ), ^{t}HZ(DQS), and ^{t}HZ(DQ) are defined as single ended.

Micron Technology, Inc. reserves the right to change products or specifications without notice.
© 2017 Micron Technology, Inc. All rights reserved.

^{t}LZ(DQS) and ^{t}HZ(DQS) Calculation for ATE (Automatic Test Equipment)

Figure 21: ^{t}LZ(DQS) Method for Calculating Transitions and Endpoint

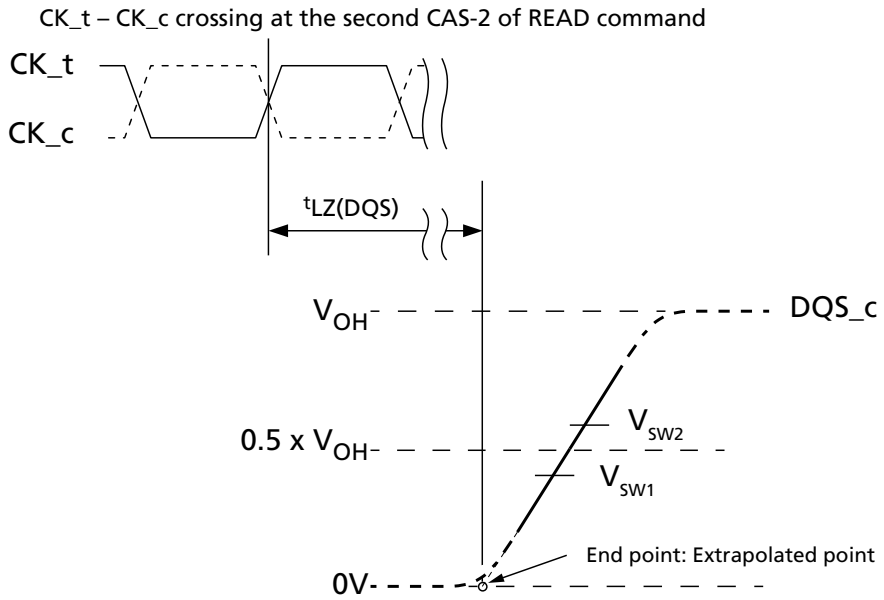

Notes:
1. Conditions for calibration: Pull down driver R_{ON} = 40 ohms, $V_{OH} = V_{DDQ} \times 0.5$.
2. Termination condition for DQS_t and DQS_C = 50 ohms to V_{SSQ}.
3. The V_{OH} level depends on MR22 OP[2:0] and MR3 OP[0] settings as well as device tolerances. Use the actual V_{OH} value for ^{t}HZ and ^{t}LZ measurements.

Figure 22: ^{t}HZ(DQS) Method for Calculating Transitions and Endpoint

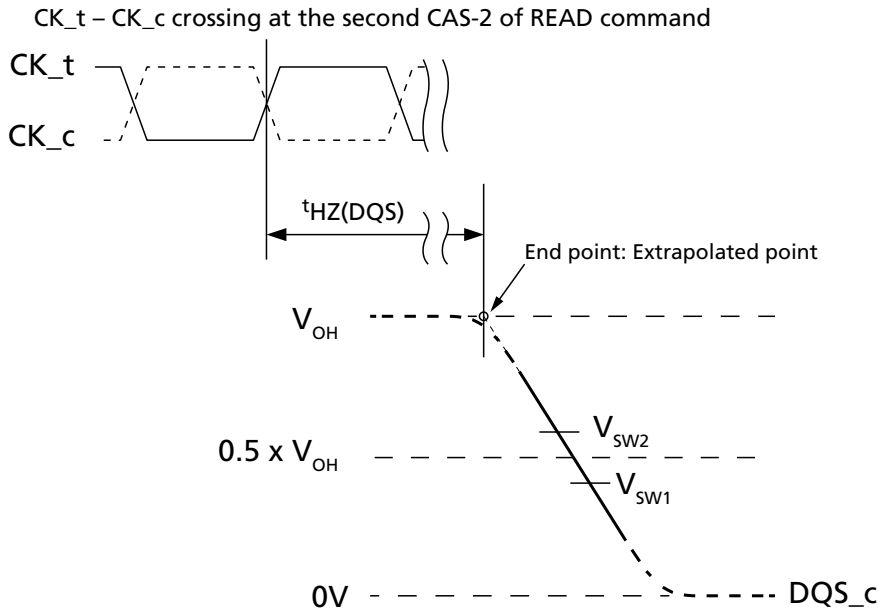

Notes:
1. Conditions for calibration: Pull down driver R_{ON} = 40 ohms, $V_{OH} = V_{DDQ} \times 0.5$.
2. Termination condition for DQS_t and DQS_C = 50 ohms to V_{SSQ}.

Micron Technology, Inc. reserves the right to change products or specifications without notice.
© 2017 Micron Technology, Inc. All rights reserved.

3. The V_{OH} level depends on MR22 OP[2:0] and MR3 OP[0] settings as well as device tolerances. Use the actual V_{OH} value for ^{t}HZ and ^{t}LZ measurements.

Table 92: Reference Voltage for ^{t}LZ(DQS), ^{t}HZ(DQS) Timing Measurements

Measured Parameter	Measured Parameter Symbol	Vsw1	Vsw2	Unit
DQS_c Low-Z time from CK_t, CK_c	^{t}LZ(DQS)	0.4 × V_{OH}	0.6 × V_{OH}	V
DQS_c High-Z time from CK_t, CK_c	^{t}HZ(DQS)	0.4 × V_{OH}	0.6 × V_{OH}	

^{t}LZ(DQ) and ^{t}HZ(DQ) Calculation for ATE (Automatic Test Equipment)

Figure 23: ^{t}LZ(DQ) Method for Calculating Transitions and Endpoint

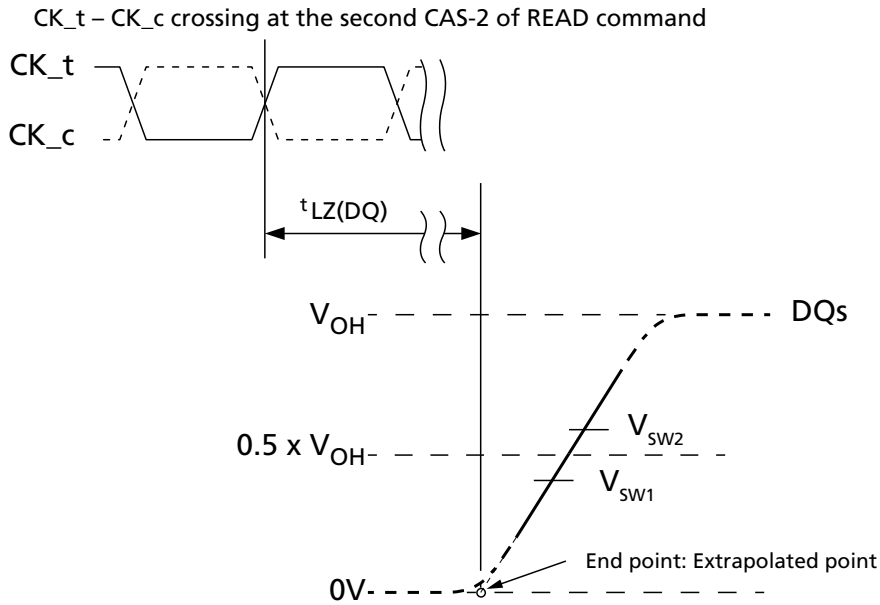

Notes:
1. Conditions for calibration: Pull down driver R_{ON} = 40 ohms, V_{OH} = V_{DDQ} × 0.5.
2. Termination condition for DQ and DMI = 50 ohms to V_{SSQ}.
3. The V_{OH} level depends on MR22 OP[2:0] and MR3 OP[0] settings as well as device tolerances. Use the actual V_{OH} value for ^{t}HZ and ^{t}LZ measurements.

Micron Technology, Inc. reserves the right to change products or specifications without notice.
© 2017 Micron Technology, Inc. All rights reserved.

Figure 24: ^{t}HZ(DQ) Method for Calculating Transitions and Endpoint

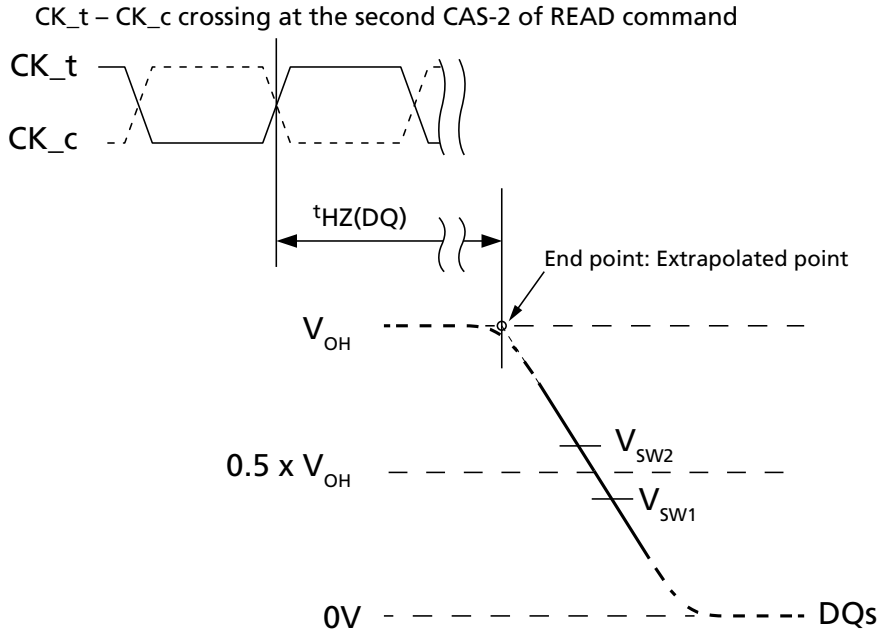

Notes:
1. Conditions for calibration: Pull down driver R_{ON} = 40 ohms, $V_{OH} = V_{DDQ} \times 0.5$.
2. Termination condition for DQ and DMI = 50 ohms to V_{SSQ}.
3. The V_{OH} level depends on MR22 OP[2:0] and MR3 OP[0] settings as well as device tolerances. Use the actual V_{OH} value for ^{t}HZ and ^{t}LZ measurements.

Table 93: Reference Voltage for ^{t}LZ(DQ), ^{t}HZ(DQ) Timing Measurements

Measured Parameter	Measured Parameter Symbol	Vsw1	Vsw2	Unit
DQ Low-Z time from CK_t, CK_c	^{t}LZ(DQ)	0.4 × V_{OH}	0.6 × V_{OH}	V
DQ High-Z time from CK_t, CK_c	^{t}HZ(DQ)	0.4 × V_{OH}	0.6 × V_{OH}	

Micron Technology, Inc. reserves the right to change products or specifications without notice.
© 2017 Micron Technology, Inc. All rights reserved.

Burst WRITE Operation

A burst WRITE command is initiated with CKE, CS, and CA[5:0] asserted to the proper state at the rising edge of CK, as defined by the Command Truth Table. Column addresses C[3:2] should be driven LOW for burst WRITE commands, and column addresses C[1:0] are not transmitted on the CA bus and are assumed to be zero so that the starting column burst address is always aligned with a 32-byte boundary. The WRITE latency (WL) is defined from the last rising edge of the clock that completes a WRITE command (for example, the second rising edge of the CAS-2 command) to the rising edge of the clock from which ^{t}DQSS is measured. The first valid latching edge of DQS must be driven WL × ^{t} CK + ^{t}DQSS after the rising edge of clock that completes a WRITE command.

The device uses an unmatched DQS DQ path for lower power, so the DQS strobe must arrive at the SDRAM ball prior to the DQ signal by ^{t}DQS2DQ. The DQS strobe output must be driven ^{t}WPRE before the first valid rising strobe edge. The ^{t}WPRE preamble is required to be 2 × ^{t}CK at any speed ranges. The DQS strobe must be trained to arrive at the DQ pad latch center-aligned with the DQ data. The DQ data must be held for TdiVW, and the DQS must be periodically trained to stay roughly centered in the TdiVW. Burst data is captured by the SDRAM on successive edges of DQS until the 16- or 32-bit data burst is complete. The DQS strobe must remain active (toggling) for ^{t}WPST (write postamble) after the completion of the burst WRITE. After a burst WRITE operation, ^{t}WR must be satisfied before a PRECHARGE command to the same bank can be issued. Signal input timings are measured relative to the cross point of DQS_t and DQS_c.

Micron Technology, Inc. reserves the right to change products or specifications without notice.
© 2017 Micron Technology, Inc. All rights reserved.

Figure 25: Burst WRITE Operation

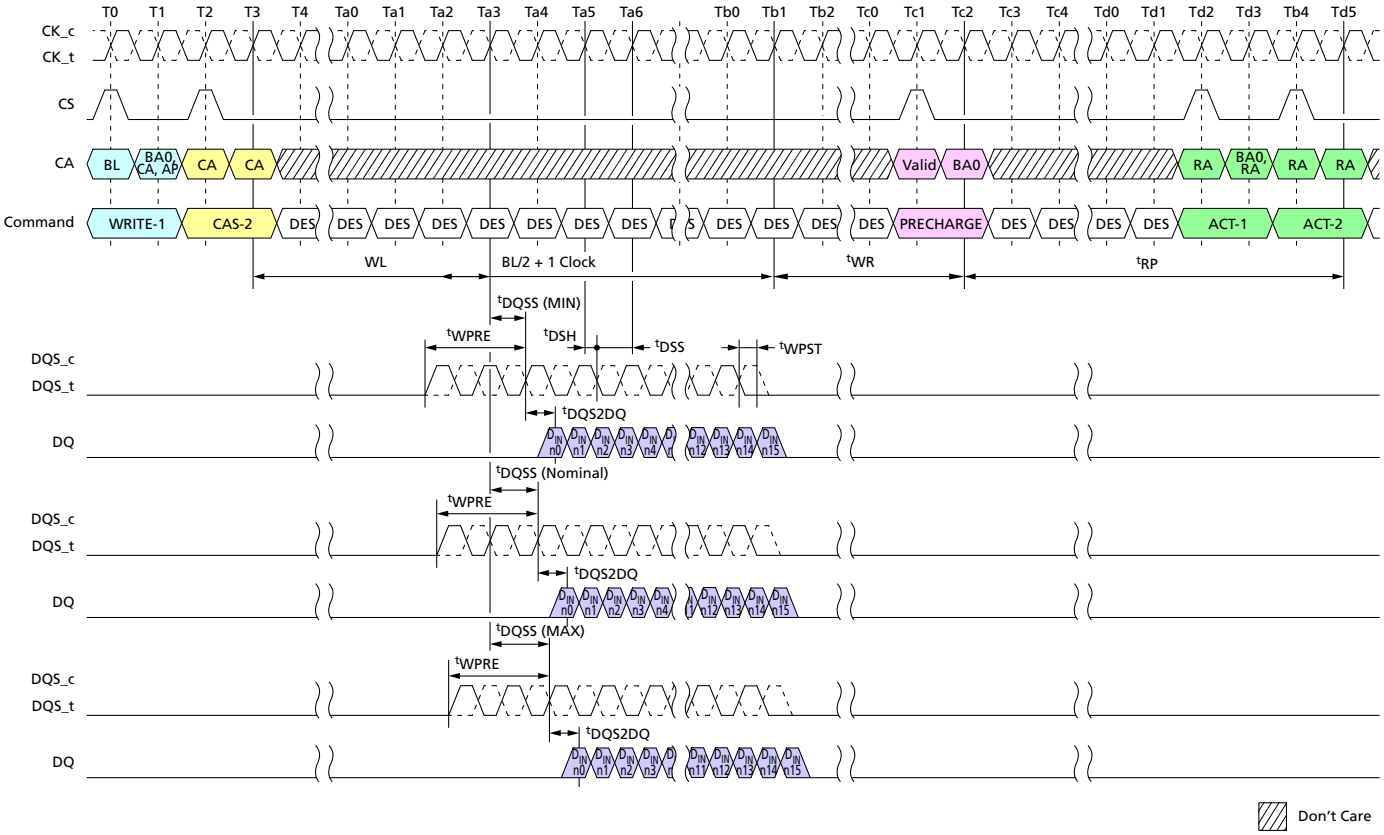

Notes:
1. BL = 16, Write postamble = 0.5*n*CK, DQ/DQS: V_{SSQ} termination.
2. D_{IN} *n* = data-in to column *n*.
3. ^{t}WR starts at the rising edge of CK after the last latching edge of DQS.
4. DES commands are shown for ease of illustration; other commands may be valid at these times.

Micron Technology, Inc. reserves the right to change products or specifications without notice.
© 2017 Micron Technology, Inc. All rights reserved.

Figure 26: Burst Write Followed by Burst Read

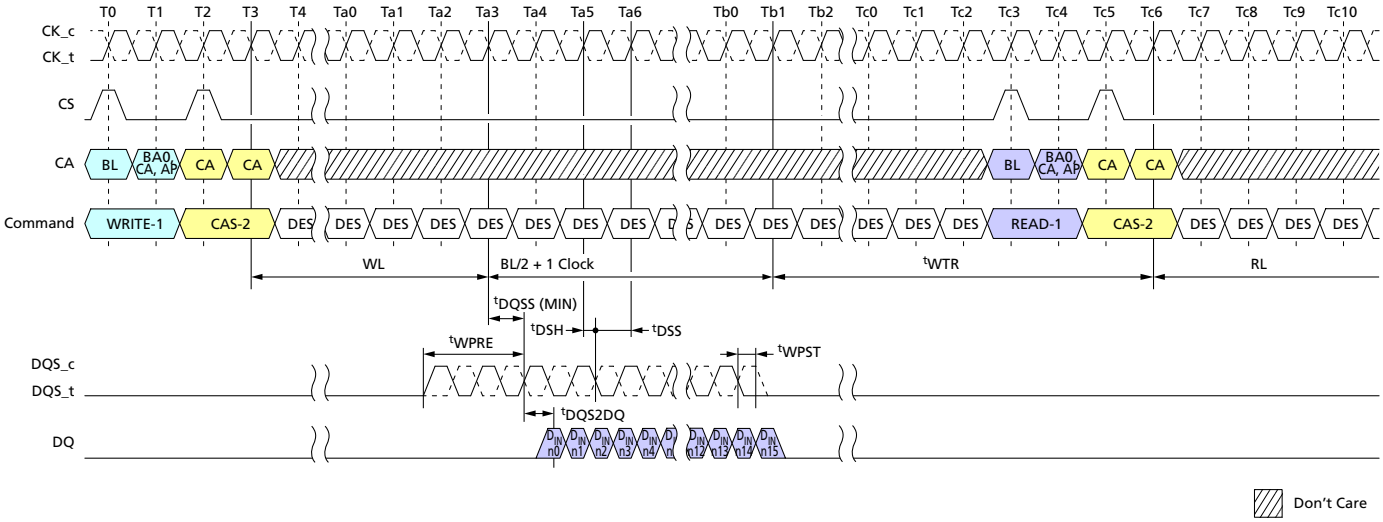

Notes:
1. BL = 16, Write postamble = 0.5*n*CK, DQ/DQS: V_{SSQ} termination.
2. D_{IN} *n* = data-in to column *n*.
3. The minimum number of clock cycles from the burst WRITE command to the burst READ command for any bank is [WL + 1 + BL/2 + RU(^{t}WTR/^{t}CK)].
4. ^{t}WTR starts at the rising edge of CK after the last latching edge of DQS.
5. DES commands are shown for ease of illustration; other commands may be valid at these times.

Micron Technology, Inc. reserves the right to change products or specifications without notice.
© 2017 Micron Technology, Inc. All rights reserved.

Write Timing

Figure 27: Write Timing

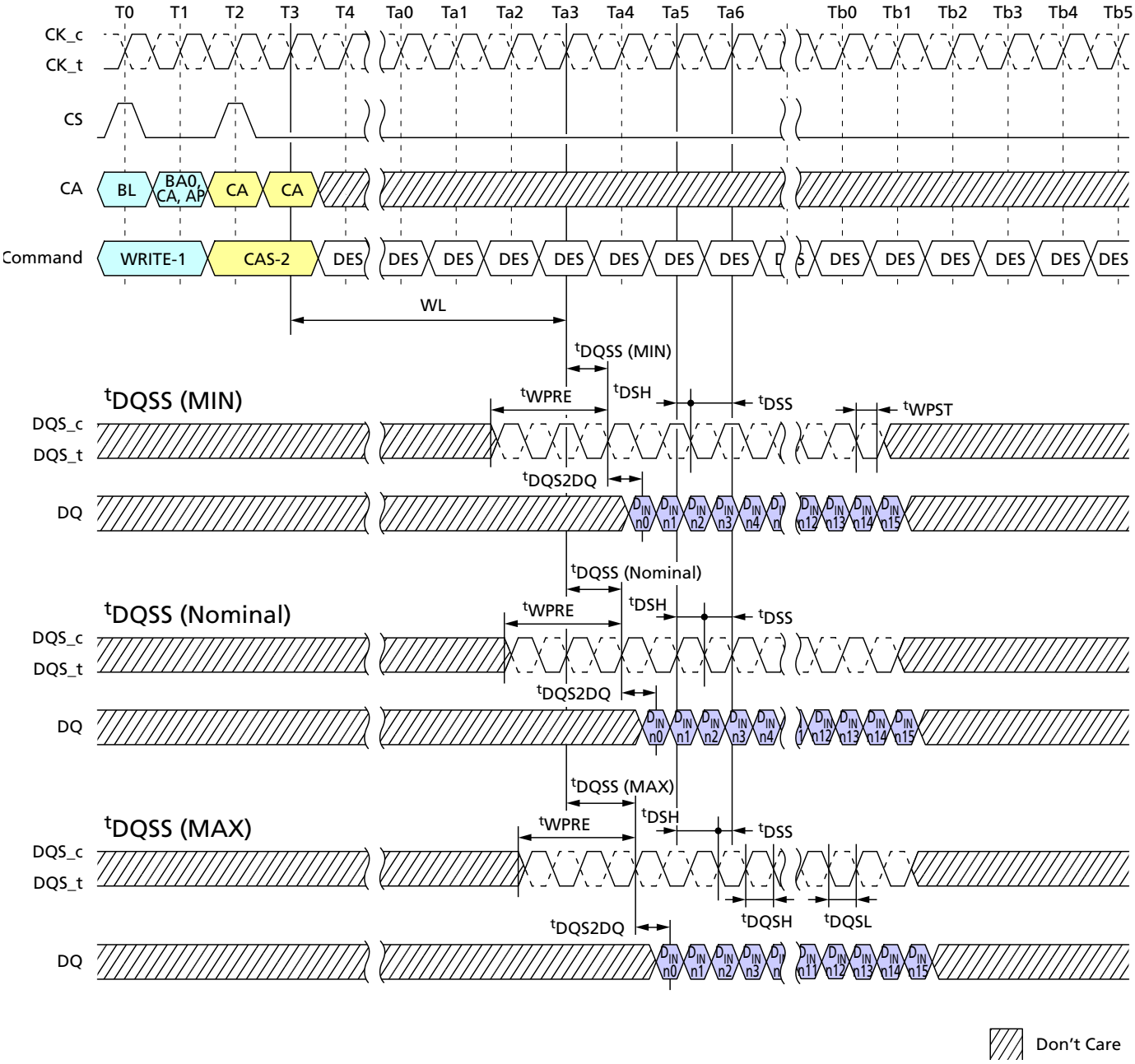

Notes:
1. BL = 16, Write postamble = 0.5*n*CK.
2. D_{IN} *n* = data-in to column *n*.
3. DES commands are shown for ease of illustration; other commands may be valid at these times.

Micron Technology, Inc. reserves the right to change products or specifications without notice.
© 2017 Micron Technology, Inc. All rights reserved.

^{t}WPRE Calculation for ATE (Automatic Test Equipment)

Figure 28: Method for Calculating ^{t}WPRE Transitions and Endpoints

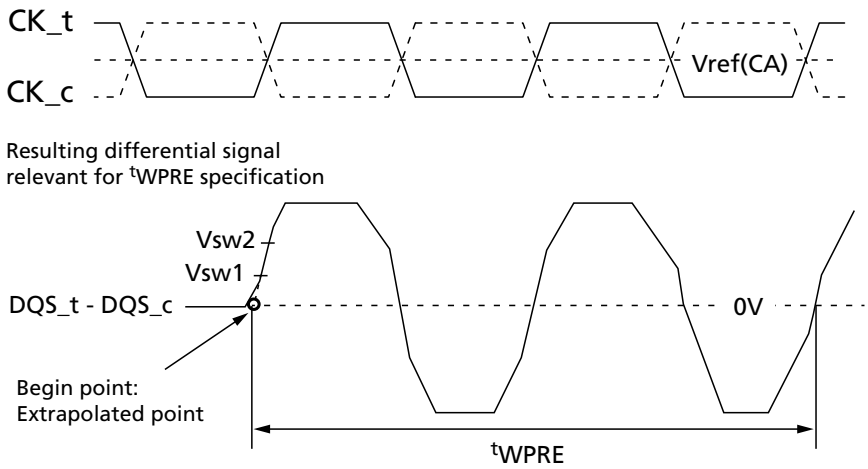

Note: 1. Termination condition for DQS_t, DQS_c, DQ, and DMI = 50 ohms to V_{SSQ}.

Table 94: Method for Calculating ^{t}WPRE Transitions and Endpoints

Measured Parameter	Measured Parameter Symbol	Vsw1	Vsw2	Unit
DQS_t, DQS_c differential write preamble	^{t}WPRE	V_{IHL_AC} × 0.3	V_{IHL_AC} × 0.7	V

^{t}WPST Calculation for ATE (Automatic Test Equipment)

Figure 29: Method for Calculating ^{t}WPST Transitions and Endpoints

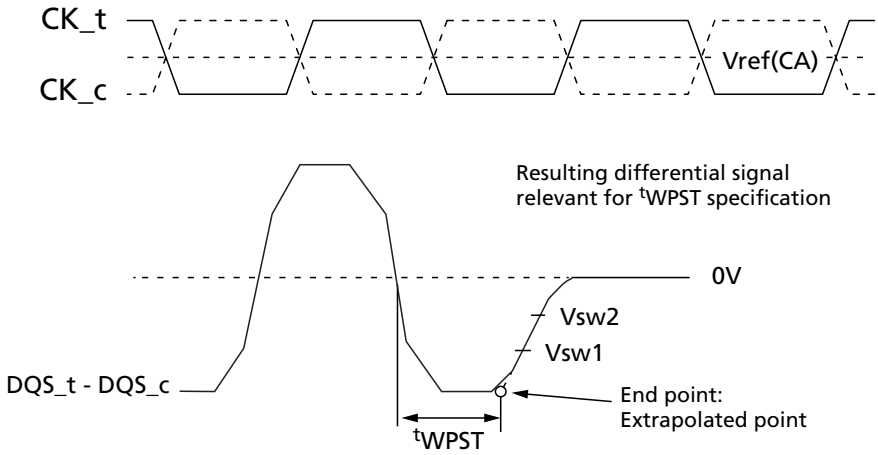

Notes:
1. Termination condition for DQS_t, DQS_c, DQ, and DMI = 50 ohms to V_{SSQ}.
2. Write postamble: 0.5^{t}CK
3. The method for calculating differential pulse widths for 1.5^{t}CK postamble is same as 0.5^{t}CK postamble.

Micron Technology, Inc. reserves the right to change products or specifications without notice.
© 2017 Micron Technology, Inc. All rights reserved.

Table 95: Reference Voltage for ^{t}WPST Timing Measurements

Measured Parameter	Measured Parameter Symbol	Vsw1	Vsw2	Unit
DQS_t, DQS_c differential write postamble	^{t}WPST	$-(V_{IHL_AC} \times 0.7)$	$-(V_{IHL_AC} \times 0.3)$	V

MASK WRITE Operation

The device requires that WRITE operations that include a byte mask anywhere in the burst sequence must use the MASK WRITE command. This allows the device to implement efficient data protection schemes based on larger data blocks. The MASK WRITE-1 command is used to begin the operation, followed by a CAS-2 command. A MASKED WRITE command to the same bank cannot be issued until ^{t}CCDMW later, to allow the device to finish the internal READ-MODIFY-WRITE operation. One data-mask-invert (DMI) pin is provided per byte lane, and the data-mask-invert timings match data bit (DQ) timing. See Data Mask Invert for more information on the use of the DMI signal.

Figure 30: MASK WRITE Command – Same Bank

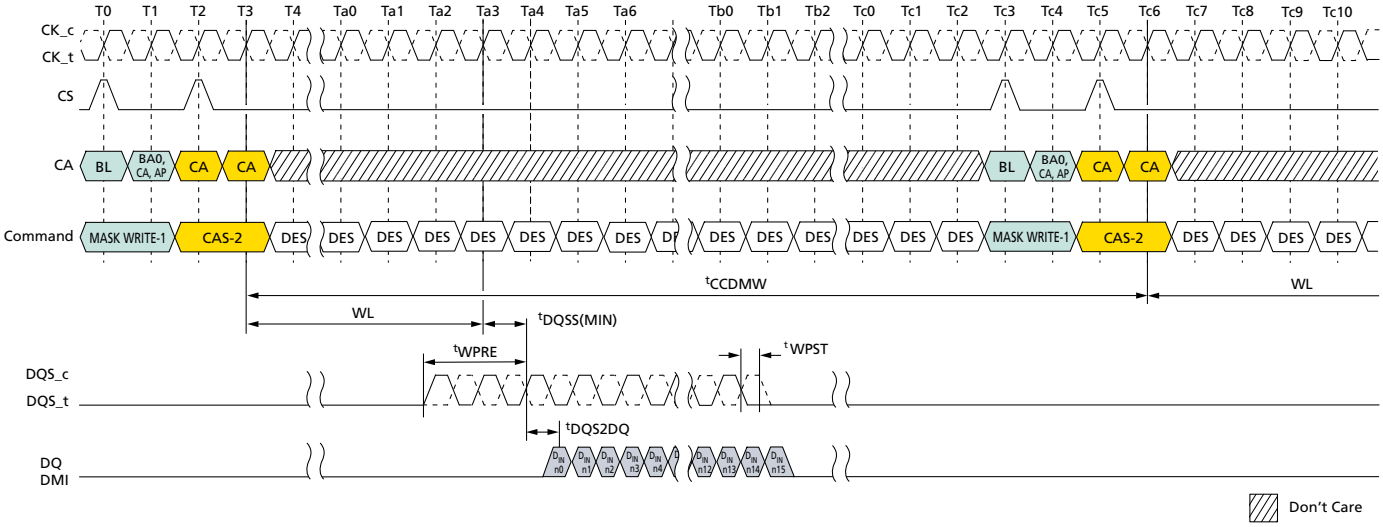

Notes:
1. BL = 16, Write postamble = 0.5*n*CK, DQ/DQS: V_{SSQ} termination.
2. D_{IN} *n* = data-in to column *n*.
3. Mask-write supports only BL16 operations. For BL32 configuration, the system needs to insert only 16-bit wide data for MASKED WRITE operation.
4. DES commands are shown for ease of illustration; other commands may be valid at these time.

Micron Technology, Inc. reserves the right to change products or specifications without notice.
© 2017 Micron Technology, Inc. All rights reserved.

Figure 31: MASK WRITE Command – Different Bank

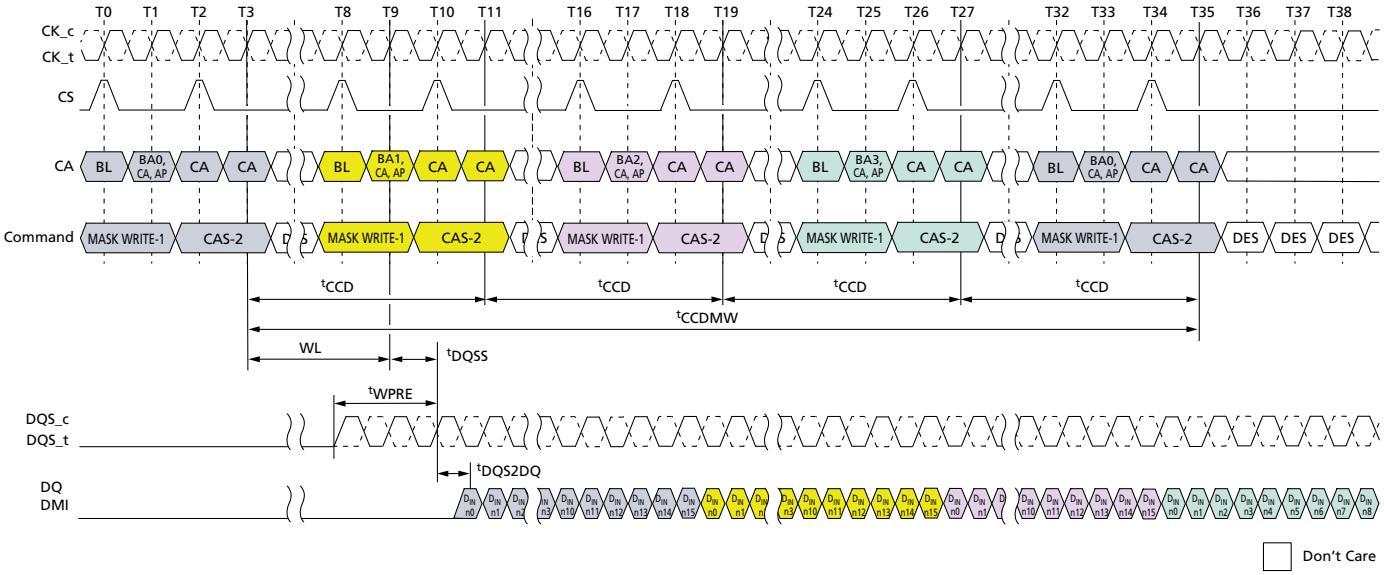

Notes:
1. BL = 16, DQ/DQS/DMI: V_{SSQ} termination.
2. D_{IN} *n* = data-in to column *n*.
3. Mask-write supports only BL16 operations. For BL32 configuration, the system needs to insert only 16-bit wide data for MASKED WRITE operation.
4. DES commands are shown for ease of illustration; other commands may be valid at these time.

Micron Technology, Inc. reserves the right to change products or specifications without notice.
© 2017 Micron Technology, Inc. All rights reserved.

Mask Write Timing Constraints for BL16

Table 96: Same Bank (ODT Disabled)

Next CMD Current CMD	ACTIVE	READ (BL = 16 or 32)	WRITE (BL = 16 or 32)	MASK WRITE	PRECHARGE
ACTIVE	Illegal	RU(^{t}RCD/^{t}CK)	RU(^{t}RCD/^{t}CK)	RU(^{t}RCD/^{t}CK)	RU(^{t}RAS/^{t}CK)
READ (with BL = 16)	Illegal	8[1]	RL + RU(^{t}DQSCK(MAX)/ ^{t}CK) + BL/2 - WL + ^{t}WPRE + RD(^{t}RPST)	RL + RU(^{t}DQSCK(MAX)/ ^{t}CK) + BL/2 - WL + ^{t}WPRE + RD(^{t}RPST)	BL/2 + MAX{(8,RU(^{t}RTP/ ^{t}CK)} - 8
READ (with BL = 32)	Illegal	16[2]	RL + RU(^{t}DQSCK(MAX)/ ^{t}CK) + BL/2 - WL + ^{t}WPRE + RD(^{t}RPST)	RL + RU(^{t}DQSCK(MAX)/ ^{t}CK) + BL/2 - WL + ^{t}WPRE + RD(^{t}RPST)	BL/2 + MAX{(8,RU(^{t}RTP/ ^{t}CK)} - 8
WRITE (with BL = 16)	Illegal	WL + 1+ BL/2 + RU(^{t}WTR/^{t}CK)	8[1]	^{t}CCDMW[3]	WL + 1 + BL/2 + RU(^{t}WR/^{t}CK)
WRITE (with BL = 32)	Illegal	WL + 1 + BL/2 + RU(^{t}WTR/^{t}CK)	16[2]	^{t}CCDMW + 8[4]	WL + 1 + BL/2 + RU(^{t}WR/^{t}CK)
MASK WRITE	Illegal	WL + 1 + BL/2 + RU(^{t}WTR/^{t}CK)	^{t}CCD	^{t}CCDMW[3]	WL + 1 + BL/2 + RU(^{t}WR/^{t}CK)
PRECHARGE	RU(^{t}RP/^{t}CK), RU(^{t}RPab/^{t}CK)	Illegal	Illegal	Illegal	4

Notes:
1. In the case of BL = 16, ^{t}CCD is 8 × ^{t}CK.
2. In the case of BL = 32, ^{t}CCD is 16 × ^{t}CK.
3. ^{t}CCDMW = 32 × ^{t}CK (4 × ^{t}CCD at BL = 16).
4. WRITE with BL = 32 operation is 8 × ^{t}CK longer than BL = 16.

Table 97: Different Bank (ODT Disabled)

Next CMD Current CMD	ACTIVE	READ (BL = 16 or 32)	WRITE (BL = 16 or 32)	MASK WRITE	PRECHARGE
ACTIVE	RU(^{t}RRD/^{t}CK)	4	4	4	2[2]
READ (with BL = 16)	4	8[1]	RL + RU(^{t}DQSCK(MAX)/ ^{t}CK) + BL/2 - WL + ^{t}WPRE + RD(^{t}RPST)	RL + RU(^{t}DQSCK(MAX)/ ^{t}CK) + BL/2 - WL + ^{t}WPRE + RD(^{t}RPST)	2[2]
READ (with BL = 32)	4	16[2]	RL + RU(^{t}DQSCK(MAX)/ ^{t}CK) + BL/2 - WL + ^{t}WPRE + RD(^{t}RPST)	RL + RU(^{t}DQSCK(MAX)/ ^{t}CK) + BL/2 - WL + ^{t}WPRE + RD(^{t}RPST)	2[2]
WRITE (with BL = 16)	4	WL + 1+ BL/2 + RU(^{t}WTR/^{t}CK)	8[1]	8[1]	2[2]
WRITE (with BL = 32)	4	WL + 1 + BL/2 + RU(^{t}WTR/^{t}CK)	16[2]	16[2]	2[2]
MASK WRITE	4	WL + 1 + BL/2 + RU(^{t}WTR/^{t}CK)	8[1]	8[1]	2[2]

Micron Technology, Inc. reserves the right to change products or specifications without notice.
© 2017 Micron Technology, Inc. All rights reserved.

Table 97: Different Bank (ODT Disabled) (Continued)

Next CMD Current CMD	ACTIVE	READ (BL = 16 or 32)	WRITE (BL = 16 or 32)	MASK WRITE	PRECHARGE
PRECHARGE	4	4	4	4	4

Notes: 1. In the case of BL = 16, ^{t}CCD is 8 × ^{t}CK
2. In the case of BL = 32, ^{t}CCD is 16 × ^{t}CK

Table 98: Same Bank (ODT Enabled)

Next CMD Current CMD	ACTIVE	READ (BL = 16 or 32)	WRITE (BL = 16 or 32)	MASK WRITE	PRECHARGE
ACTIVE	Illegal	RU(^{t}RCD/^{t}CK)	RU(^{t}RCD/^{t}CK)	RU(^{t}RCD/^{t}CK)	RU(^{t}RAS/^{t}CK)
READ (with BL = 16)	Illegal	8[1]	RL + RU(^{t}DQSCK(MAX)/ ^{t}CK) + BL/2 + RD(^{t}RPST) - ODTLon - RD(^{t}ODTon(MIN)/ ^{t}CK)	RL + RU(^{t}DQSCK(MAX)/ ^{t}CK) + BL/2 + RD(^{t}RPST) - ODTLon - RD(^{t}ODTon(MIN)/ ^{t}CK)	BL/2 + MAX{(8,RU(^{t}RTP/ ^{t}CK)} - 8
READ (with BL = 32)	Illegal	16[2]	RL + RU(^{t}DQSCK(MAX)/ ^{t}CK) + BL/2 + RD(^{t}RPST) - ODTLon - RD(^{t}ODTon(MIN)/ ^{t}CK)	RL + RU(^{t}DQSCK(MAX)/ ^{t}CK) + BL/2 + RD(^{t}RPST) - ODTLon - RD(^{t}ODTon(MIN)/ ^{t}CK)	BL/2 + MAX{(8,RU(^{t}RTP/ ^{t}CK)} - 8
WRITE (with BL = 16)	Illegal	WL + 1+ BL/2 + RU(^{t}WTR/^{t}CK)	8[1]	^{t}CCDMW[3]	WL + 1 + BL/2 + RU(^{t}WR/^{t}CK)
WRITE (with BL = 32)	Illegal	WL + 1 + BL/2 + RU(^{t}WTR/^{t}CK)	16[2]	^{t}CCDMW + 8[4]	WL + 1 + BL/2 + RU(^{t}WR/^{t}CK)
MASK WRITE	Illegal	WL + 1 + BL/2 + RU(^{t}WTR/^{t}CK)	^{t}CCD	^{t}CCDMW[3]	WL + 1 + BL/2 + RU(^{t}WR/^{t}CK)
PRECHARGE	RU(^{t}RP/^{t}CK), RU(^{t}RPab/^{t}CK)	Illegal	Illegal	Illegal	4

Notes: 1. In the case of BL = 16, ^{t}CCD is 8 × ^{t}CK.
2. In the case of BL = 32, ^{t}CCD is 16 × ^{t}CK.
3. ^{t}CCDMW = 32 × ^{t}CK (4 × ^{t}CCD at BL = 16).
4. WRITE with BL = 32 operation is 8 × ^{t}CK longer than BL = 16.

Table 99: Different Bank (ODT Enabled)

Next CMD Current CMD	ACTIVE	READ (BL = 16 or 32)	WRITE (BL = 16 or 32)	MASK WRITE	PRECHARGE
ACTIVE	RU(^{t}RRD/^{t}CK)	4	4	4	2[2]
READ (with BL = 16)	4	8[1]	RL + RU(^{t}DQSCK(MAX)/ ^{t}CK) + BL/2 + RD(^{t}RPST) - ODTLon - RD(^{t}ODTon(MIN)/ ^{t}CK)	RL + RU(^{t}DQSCK(MAX)/ ^{t}CK) + BL/2 + RD(^{t}RPST) - ODTLon - RD(^{t}ODTon(MIN)/ ^{t}CK)	2[2]

Micron Technology, Inc. reserves the right to change products or specifications without notice.
© 2017 Micron Technology, Inc. All rights reserved.

Table 99: Different Bank (ODT Enabled) (Continued)

Next CMD Current CMD	ACTIVE	READ (BL = 16 or 32)	WRITE (BL = 16 or 32)	MASK WRITE	PRECHARGE
READ (with BL = 32)	4	16[2]	RL + RU(^{t}DQSCK(MAX)/ ^{t}CK) + BL/2 + RD(^{t}RPST) - ODTLon - RD(^{t}ODTon(MIN)/ ^{t}CK)	RL + RU(^{t}DQSCK(MAX)/ ^{t}CK) + BL/2 + RD(^{t}RPST) - ODTLon - RD(^{t}ODTon(MIN)/ ^{t}CK)	2[2]
WRITE (with BL = 16)	4	WL + 1+ BL/2 + RU(^{t}WTR/ ^{t}CK)	8[1]	8[1]	2[2]
WRITE (with BL = 32)	4	WL + 1 + BL/2 + RU(^{t}WTR/ ^{t}CK)	16[2]	16[2]	2[2]
MASK WRITE	4	WL + 1 + BL/2 + RU(^{t}WTR/ ^{t}CK)	8[1]	8[1]	2[2]
PRECHARGE	4	4	4	4	4

Notes:
1. In the case of BL = 16, ^{t}CCD is 8 × ^{t}CK.
2. In the case of BL = 32, ^{t}CCD is 16 × ^{t}CK.

Data Mask and Data Bus Inversion (DBI [DC]) Function

Data mask (DM) is supported for WRITE operations and the data bus inversion DBI (DC) is supported for READ, WRITE, MASK WRITE, MRR, and MRW operations. DM and DBI (DC) functions are supported with byte granularity. DBI (DC) for READ operations (READ, MRR) can be enabled or disabled via MR3 OP[6]. DBI (DC) for WRITE operations (WRITE, MASK WRITE, MRW) can be enabled or disabled via MR3 OP[7]. DM for MASK WRITE operations can be enabled or disabled via MR13 OP[5]. The device has one data mask inversion (DMI) pin per byte and a total of two DMI pins per channel. The DMI signal is a bidirectional DDR signal, is sampled with the DQ signals, and is electrically identical to a DQ signal.

There are eight possible states for the device with the DM and DBI (DC) functions.

Table 100: Function Behavior of DMI Signal During WRITE, MASKED WRITE, and READ Operations

DM Function	Write DBI (DC)	Read DBI (DC)	DMI Signal					
			During WRITE	During MASKED WRITE	During READ	During MPC[WRITE-FIFO]	During MPC[READ-FIFO]	During MPC[READ DQ CAL]
Disabled	Disabled	Disabled	Don't Care[1]	Illegal[1, 3]	High-Z[2]	Don't Care[1]	High-Z[2]	High-Z[2]
Disabled	Enabled	Disabled	DBI (DC)[4]	Illegal[3]	High-Z[2]	Train[9]	Train[10]	Train[11]
Disabled	Disabled	Enabled	Don't Care[1]	Illegal[3]	DBI (DC)[5]	Train[9]	Train[10]	Train[11]
Disabled	Enabled	Enabled	DBI (DC)[4]	Illegal[3]	DBI (DC)[5]	Train[9]	Train[10]	Train[11]
Enabled	Disabled	Disabled	Don't Care[6]	DM[7]	High-Z[2]	Train[9]	Train[10]	Train[11]
Enabled	Enabled	Disabled	DBI (DC)[4]	DBI (DC)[8]	High-Z[2]	Train[9]	Train[10]	Train[11]
Enabled	Disabled	Enabled	Don't Care[6]	DM[7]	DBI (DC)[5]	Train[9]	Train[10]	Train[11]

Micron Technology, Inc. reserves the right to change products or specifications without notice.
© 2017 Micron Technology, Inc. All rights reserved.

Table 100: Function Behavior of DMI Signal During WRITE, MASKED WRITE, and READ Operations (Continued)

DM Function	Write DBI (DC)	Read DBI (DC)	DMI Signal					
			During WRITE	During MASKED WRITE	During READ	During MPC[WRITE-FIFO]	During MPC[READ-FIFO]	During MPC[READ DQ CAL]
Enabled	Enabled	Enabled	DBI (DC)[4]	DBI (DC)[8]	DBI (DC)[5]	Train[9]	Train[10]	Train[11]

Notes:
1. The DMI input signal is "Don't Care." DMI input receivers are turned off.
2. DMI output drivers are turned off.
3. The MASK WRITE command is not allowed and is considered an illegal command when the DM function is disabled.
4. The DMI signal is treated as DBI and indicates whether the device needs to invert the write data received on DQ within a byte. The device inverts write data received on the DQ inputs if DMI is sampled HIGH and leaves the write data non-inverted if DMI is sampled LOW.
5. The device inverts read data on its DQ outputs associated within a byte and drives the DMI signal HIGH when more than four data bits = 1 within a given byte lane; otherwise, the device does not invert the read data and drives DMI signal LOW.
6. The device does not perform a MASK operation when it receives a WRITE (or MRW) command. During the WRITE burst, the DMI signal must be driven LOW.
7. The device requires an explicit MASKED WRITE command for all MASKED WRITE operations. The DMI signal is treated as a data mask (DM) and indicates which bytes within a burst will be masked. When the DMI signal is sampled HIGH, the device masks that beat of the burst for the given byte lane. All DQ input signals within a byte are "Don't Care" (either HIGH or LOW) when DMI is HIGH. When the DMI signal is sampled LOW, the device does not perform a MASK operation and data received on the DQ inputs is written to the array.
8. The device requires an explicit MASKED WRITE command for all MASKED WRITE operations. The device masks the write data received on the DQ inputs if five or more data bits = 1 on DQ[2:7] or DQ[10:15] (for lower byte or upper byte respectively) and the DMI signal is LOW. Otherwise, the device does not perform the MASK operation and treats it as a legal DBI pattern. The DMI signal is treated as a DBI signal, and data received on the DQ input is written to the array.
9. The DMI signal is treated as a training pattern. The device does not perform any MASK operation and does not invert write data received on the DQ inputs.
10. The DMI signal is treated as a training pattern. The device returns the data pattern written to the WRITE-FIFO.
11. The DMI signal is treated as a training pattern. For more information, see the Read DQ Calibration Training section.

Micron Technology, Inc. reserves the right to change products or specifications without notice.
© 2017 Micron Technology, Inc. All rights reserved.

Figure 32: MASKED WRITE Command with Write DBI Enabled; DM Enabled

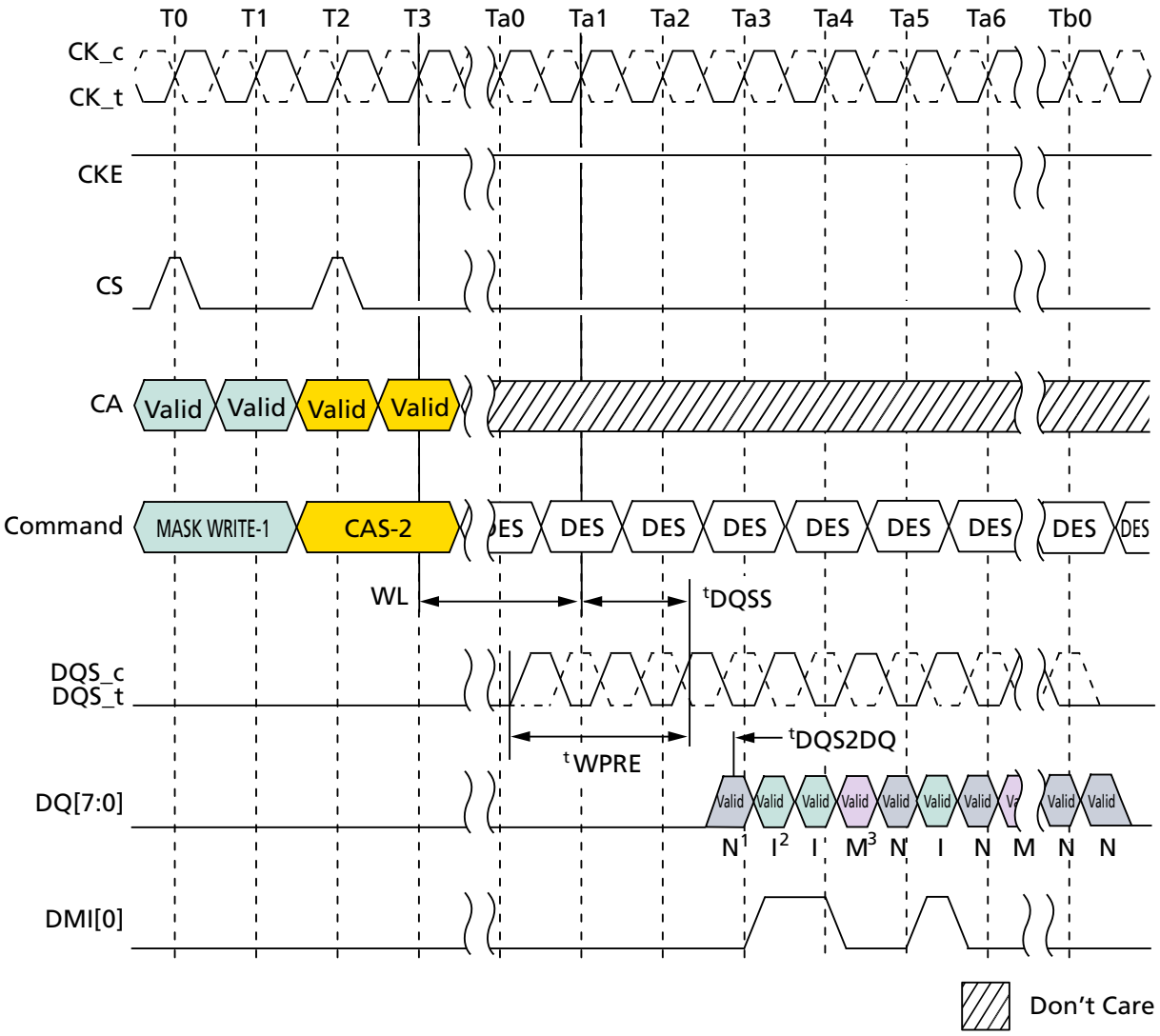

Notes:
1. N: Input data is written to DRAM cell.
2. I: Input data is inverted, then written to DRAM cell.
3. M: Input data is masked. The total count of 1 data bits on DQ[7:2] is equal to or greater than five.
4. Data mask (DM) is enable: MR13 OP [5] = 0, Data bus inversion (DBI) write is enable: MR3 OP[7] = 1.

Micron Technology, Inc. reserves the right to change products or specifications without notice.
© 2017 Micron Technology, Inc. All rights reserved.

Figure 33: WRITE Command with Write DBI Enabled; DM Disabled

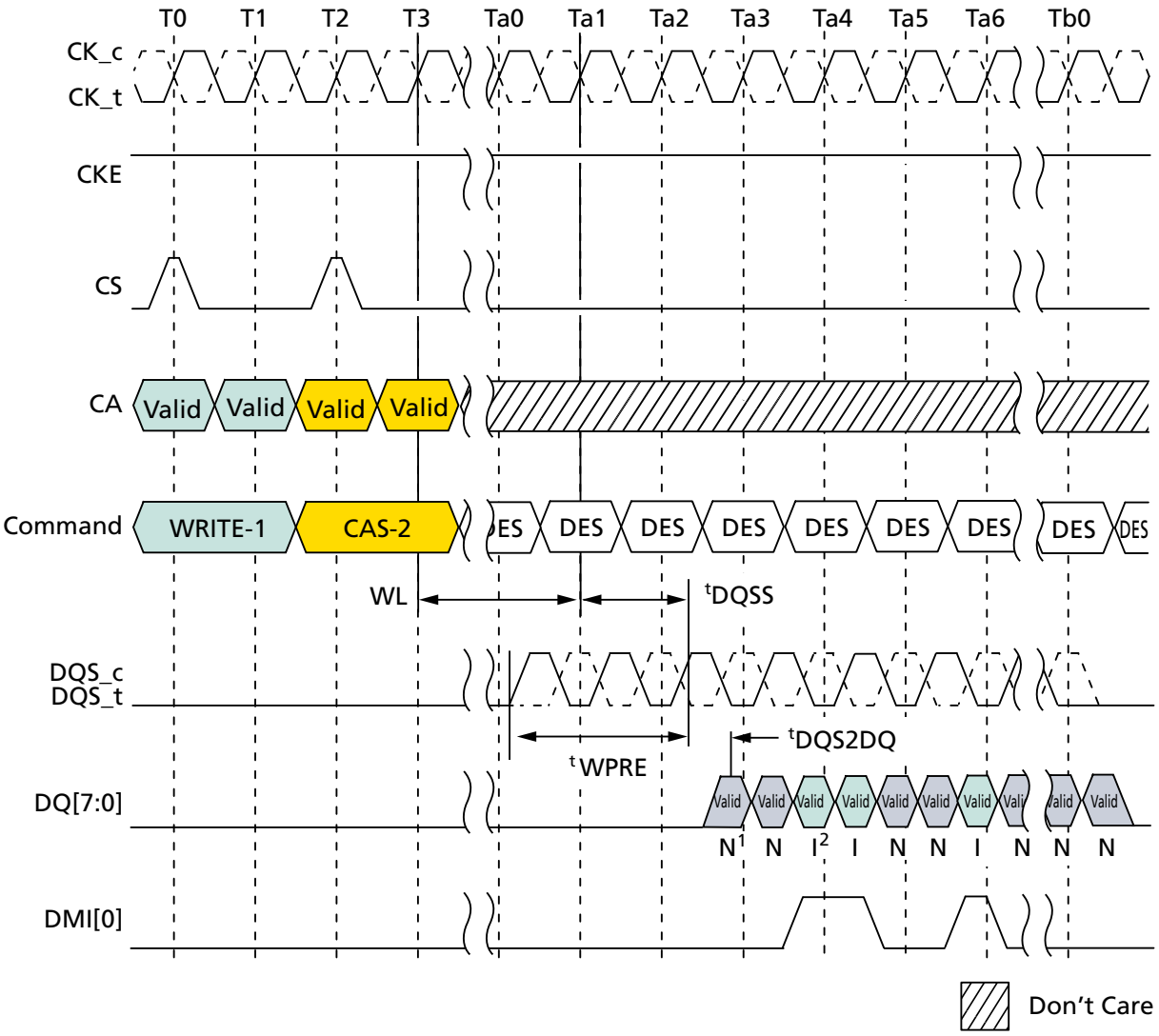

Notes:
1. N: Input data is written to DRAM cell.
2. I: Input data is inverted, then written to DRAM cell.
3. Data mask (DM) is disable: MR13 OP [5] = 1, Data bus inversion (DBI) write is enable: MR3 OP[7] = 1.

Micron Technology, Inc. reserves the right to change products or specifications without notice.
© 2017 Micron Technology, Inc. All rights reserved.

WRITE and MASKED WRITE Operation DQS Control (WDQS Control)

The device supports WRITE, MASKED WRITE, and WR-FIFO operations with the following DQS controls. Before and after WRITE, MASKED WRITE, and WR-FIFO operations, DQS_t, and DQS_c are required to have sufficient voltage gap to make sure the write buffers operating normally without any risk of meta-stability.

The device is supported by either of the two WDQS control modes below.

- Mode 1: Read based control
- Mode 2: WDQS_on / WDQS_off definition based control

Regardless of ODT enable/disable, WDQS related timing described here does not allow any change of existing command timing constraints for all READ/WRITE operations. In case of any conflict or ambiguity on the command timing constraints caused by the specification here, the specification defined in the Timing Constraints for Training Commands table should have higher priority than WDQS control requirements.

In order to prevent write preamble related failure, either of the two WDQS controls to the device should be supported.

WDQS Control Mode 1 – Read-Based Control

The device needs to be guaranteed the differential WDQS, but the differential WDQS can be controlled as described below. WDQS control requirements here can be ignored while differential read DQS is operated or while DQS hands over from read to write or vice versa.

1. When WRITE/MASKED WRITE command is issued, SoC makes the transition from driving DQS_c HIGH to driving differential DQS_t/DQS_c, followed by normal differential burst on DQS pins.
2. At the end of post amble of WRITE/MASKED WRITE burst, SoC resumes driving DQS_c HIGH through the subsequent states except for DQS toggling and DQS turn around time of WT-RD and RD-WT as long as CKE is HIGH.
3. When CKE is LOW, the state of DQS_t/DQS_c is allowed to be “Don’t Care.”

Figure 34: WDQS Control Mode 1

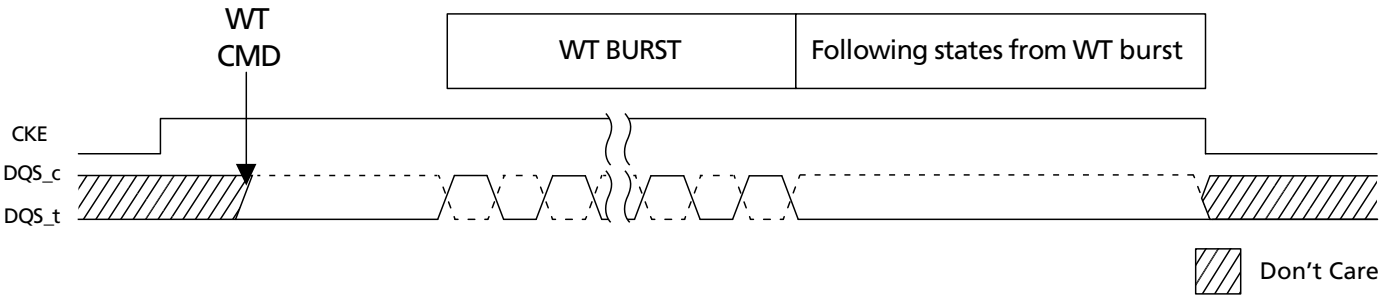

WDQS Control Mode 2 – WDQS_On/Off

After WRITE/MASKED WRITE command is issued, DQS_t and DQS_c required to be differential from WDQS_on, and DQS_t and DQS_c can be “Don’t Care” status from WDQS_off of WRITE/MASKED WRITE command. When ODT is enabled, WDQS_on and WDQS_off timing is located in the middle of the operations. When host disables

Micron Technology, Inc. reserves the right to change products or specifications without notice.
© 2017 Micron Technology, Inc. All rights reserved.

ODT, WDQS_on and WDQS_off constraints conflict with ^{t}RTW. The timing does not conflict when ODT is enabled because WDQS_on and WDQS_off timing is covered in ODTLon and ODTLoff. However, regardless of ODT on/off, WDQS_on/off timing below does not change any command timing constraints for all read and write operations. In order to prevent the conflict, WDQS_on/off requirement can be ignored where WDQS_on/off timing is overlapped with read operation period including READ burst period and ^{t}RPST or overlapped with turn-around time (RD-WT or WT-RD). In addition, the period during DQS toggling caused by read and write can be counted as WDQS_on/off.

Parameters

- WDQS_on: The maximum delay from WRITE/MASKED WRITE command to differential DQS_t and DQS_c
- WDQS_off: The minimum delay for DQS_t and DQS_c differential input after the last WRITE/MASKED WRITE command
- WDQS_Exception: The period where WDQS_on and WDQS_off timing is overlapped with READ operation or with DQS turn around (RD-WT, WT-RD)
  - WDQS_Exception @ ODT disable = MAX(WL-WDQS_on + ^{t}DQSTA - ^{t}WPRE - n ^{t}CK, 0 ^{t}CK) where RD to WT command gap = ^{t}RTW(MIN)@ODT disable + n ^{t}CK
  - WDQS_Exception @ ODT enable = ^{t}DQSTA

Table 101: WDQS_On/WDQS_Off Definition

WRITE Latency				WDQS_On (Max)		WDQS_Off (Min)		Lower Frequency Limit (>)	Upper Frequency Limit (≤)
Set A	Set B	*n*WR	*n*RTP	Set A	Set B	Set A	Set B		
4	4	6	8	0	0	15	15	10	266
6	8	10	8	0	0	18	20	266	533
8	12	16	8	0	6	21	25	533	800
10	18	20	8	4	12	24	32	800	1066
12	22	24	10	4	14	27	37	1066	1333
14	26	30	12	6	18	30	42	1333	1600
16	30	34	14	6	20	33	47	1600	1866
18	34	40	16	8	24	36	52	1866	2133

Notes:
1. WDQS_on/off requirement can be ignored when WDQS_on/off timing is overlapped with READ operation period including READ burst period and ^{t}RPST or overlapped with turn-around time (RD-WT or WT-RD).
2. DQS toggling period caused by read and write can be counted as WDQS_on/off.

Table 102: WDQS_On/WDQS_Off Allowable Variation Range

	Min	Max	Unit
WDQS_on	–0.25	0.25	^{t}CK(avg)
WDQS_off	–0.25	0.25	^{t}CK(avg)

Micron Technology, Inc. reserves the right to change products or specifications without notice.
© 2017 Micron Technology, Inc. All rights reserved.

Table 103: DQS Turn-Around Parameter

Parameter	Description	Value	Unit	Note
^{t}DQSTA	Turn-around time RDQS to WDQS for WDQS control case	TBD	–	1

Note: 1. ^{t}DQSTA is only applied to WDQS_exception case when WDQS Control. Except for WDQS Control, ^{t}DQSTA can be ignored.

Figure 35: Burst WRITE Operation

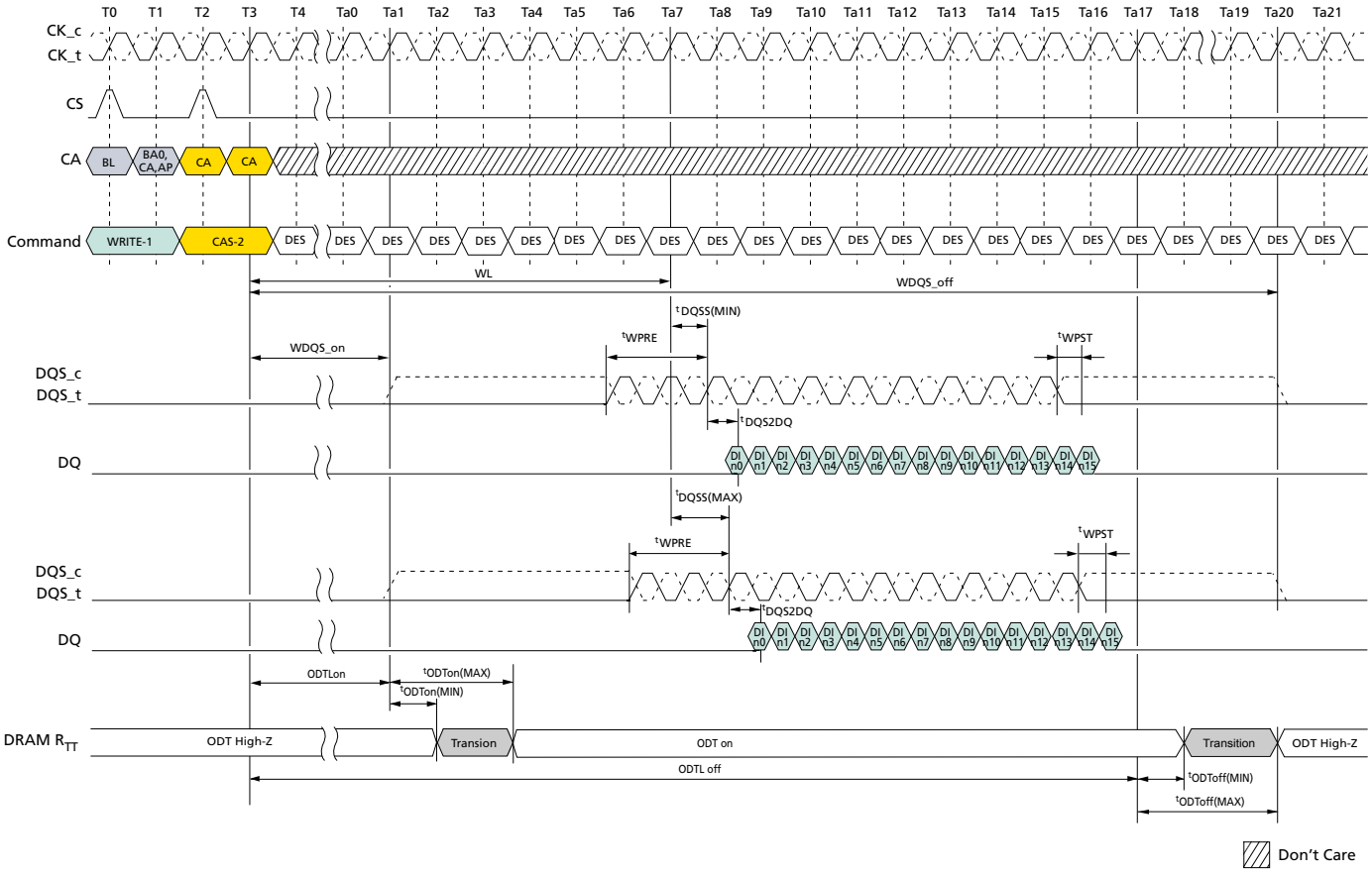

Notes: 1. BL=16, Write postamble = 0.5*n*CK, DQ/DQS: V_{SSQ} termination.
2. DI *n* = data-in to column *n*.
3. DES commands are shown for ease of illustration; other commands may be valid at these times.
4. DRAM R_{TT} is only applied when ODT is enabled (MR11 OP[2:0] is not 000b).

Micron Technology, Inc. reserves the right to change products or specifications without notice.
© 2017 Micron Technology, Inc. All rights reserved.

Figure 36: Burst READ Followed by Burst WRITE or Burst MASKED WRITE (ODT Disable)

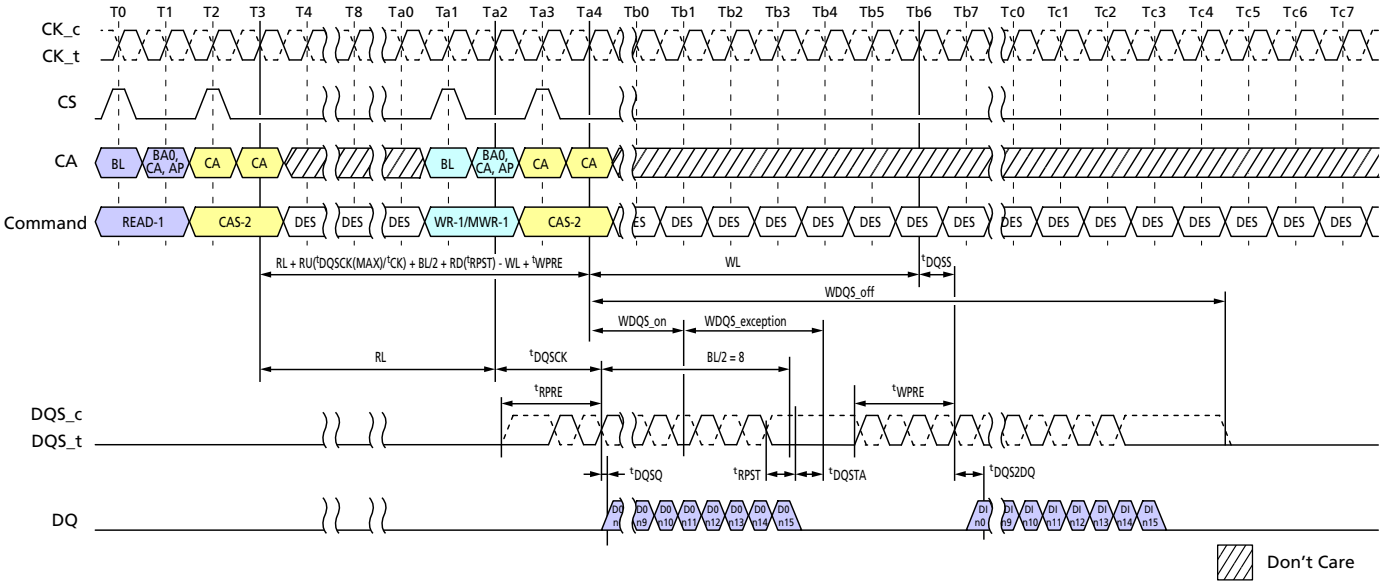

Notes:
1. BL = 16, Read preamble = Toggle, Read postamble = 0.5*n*CK, Write preamble = 2*n*CK, Write postamble = 0.5*n*CK.
2. DO *n* = data-out from column *n*, DI *n* = data-in to column *n*.
3. DES commands are shown for ease of illustration; other commands may be valid at these times.
4. WDQS_on and WDQS_off requirement can be ignored where WDQS_on/off timing is overlapped with READ operation period including READ burst period and ^{t}RPST or overlapped with turn-around time (RD-WT or WT-RD).

Micron Technology, Inc. reserves the right to change products or specifications without notice.
© 2017 Micron Technology, Inc. All rights reserved.

Figure 37: Burst READ Followed by Burst WRITE or Burst MASKED WRITE (ODT Enable)

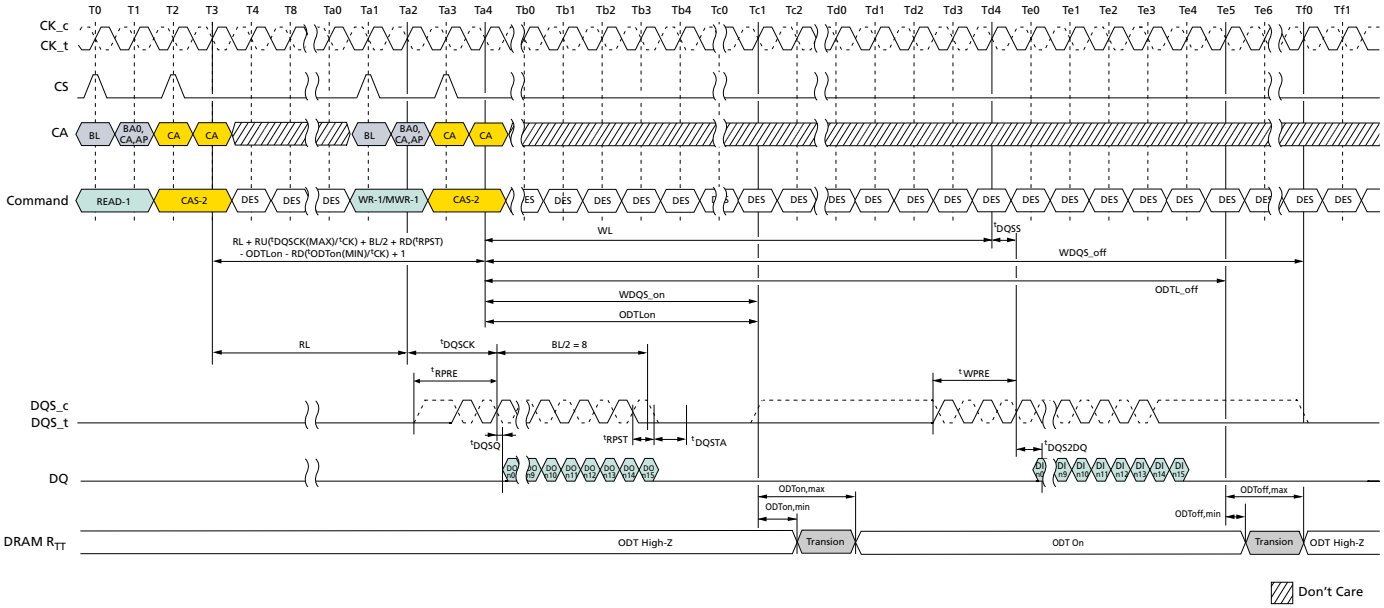

Notes:
1. BL = 16, Read preamble = Toggle, Read postamble = 0.5*n*CK, Write preamble = 2*n*CK, Write postamble = 0.5*n*CK, DQ/DQS: V_{SSQ} termination.
2. DO *n* = data-out from column *n*, DI *n* = data-in to column *n*.
3. DES commands are shown for ease of illustration; other commands may be valid at these times.
4. WDQS_on and WDQS_off requirement can be ignored where WDQS_on/off timing is overlapped with READ operation period including READ burst period and ^{t}RPST or overlapped with turn-around time (RD-WT or WT-RD).

Preamble and Postamble Behavior

Preamble, Postamble Behavior in READ-to-READ Operations

The following illustrations show the behavior of the device's read DQS_t and DQS_c pins during cases where the preamble, postamble, and/or data clocking overlap.

DQS will be driven with the following priority

1. Data clocking edges will always be driven
2. Postamble
3. Preamble

Essentially the data clocking, preamble, and postamble will be ordered such that all edges will be driven.

Additional examples of seamless and borderline non-overlapping cases have been included for clarity.

Micron Technology, Inc. reserves the right to change products or specifications without notice.
© 2017 Micron Technology, Inc. All rights reserved.

READ-to-READ Operations – Seamless

Figure 38: READ Operations: ^{t}CCD = MIN, Preamble = Toggle, 1.5*n*CK Postamble

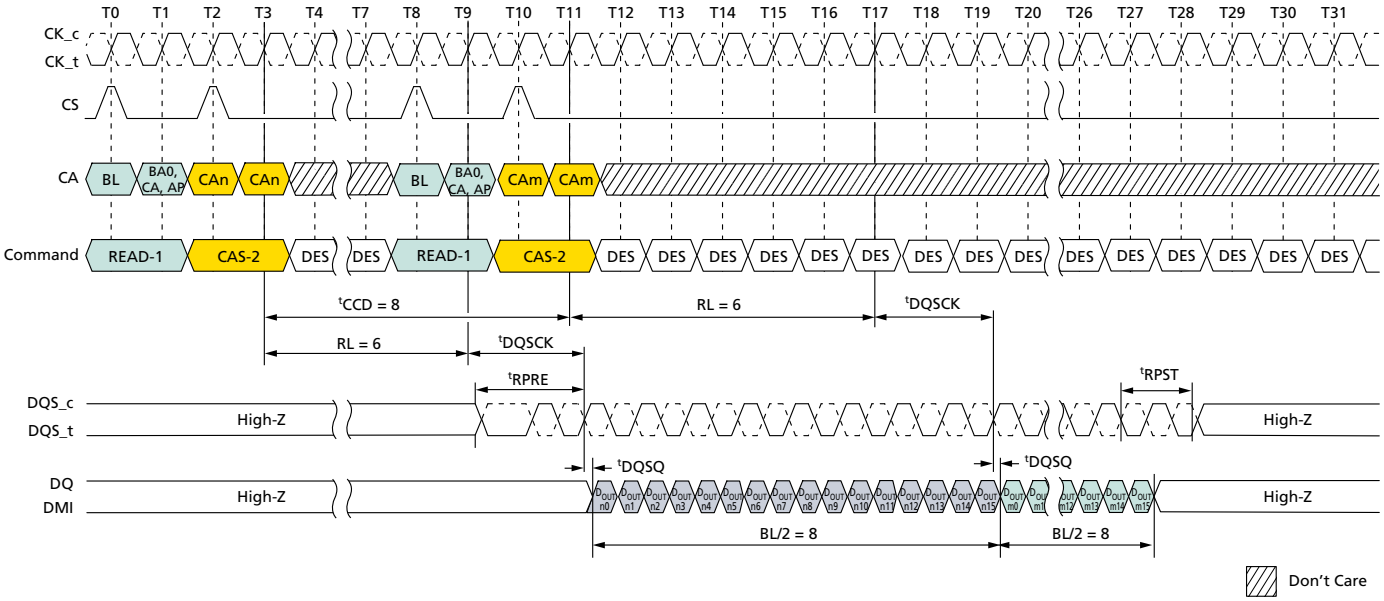

Notes:
1. BL = 16 for column *n* and column *m*; RL = 6; Preamble = Toggle; Postamble = 1.5*n*CK.
2. D_{OUT} *n*/*m* = data-out from column *n* and column *m*.
3. DES commands are shown for ease of illustration; other commands may be valid at these times.

Micron Technology, Inc. reserves the right to change products or specifications without notice.
© 2017 Micron Technology, Inc. All rights reserved.

READ-to-READ Operations – Consecutive

Figure 39: Seamless READ: ^{t}CCD = MIN + 1, Preamble = Toggle, 1.5*n*CK Postamble

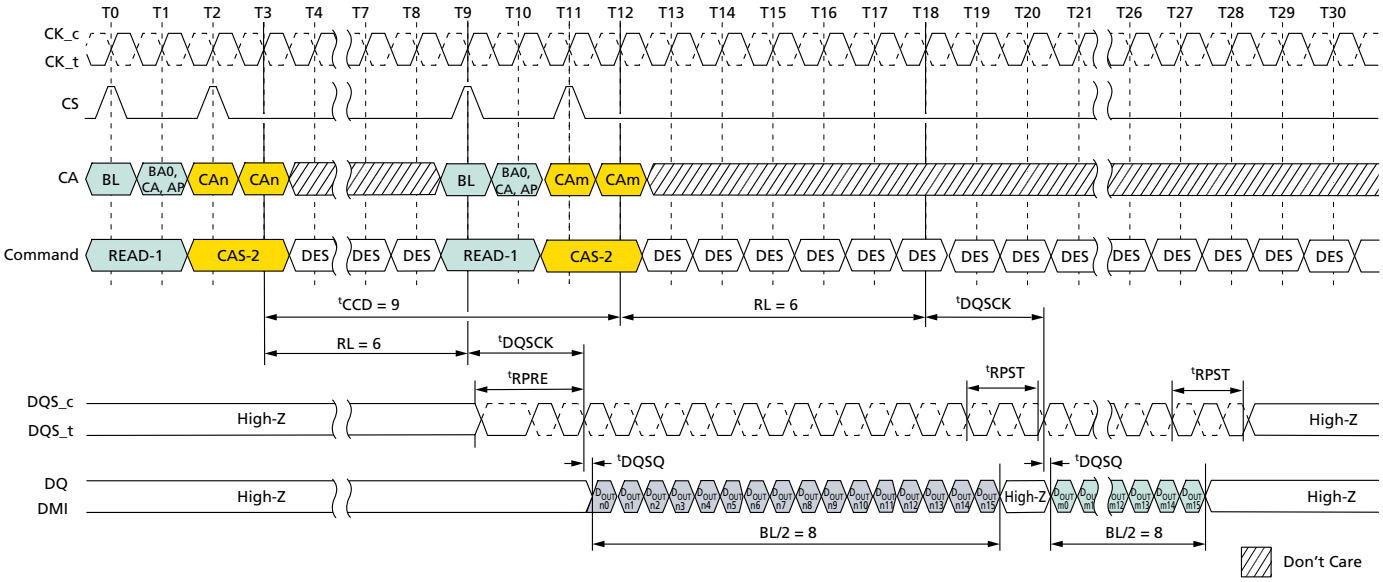

Notes:
1. BL = 16 for column *n* and column *m*; RL = 6; Preamble = Toggle; Postamble = 1.5*n*CK.
2. D_{OUT} *n*/*m* = data-out from column *n* and column *m*.
3. DES commands are shown for ease of illustration; other commands may be valid at these times.

Figure 40: Consecutive READ: ^{t}CCD = MIN + 1, Preamble = Toggle, 0.5*n*CK Postamble

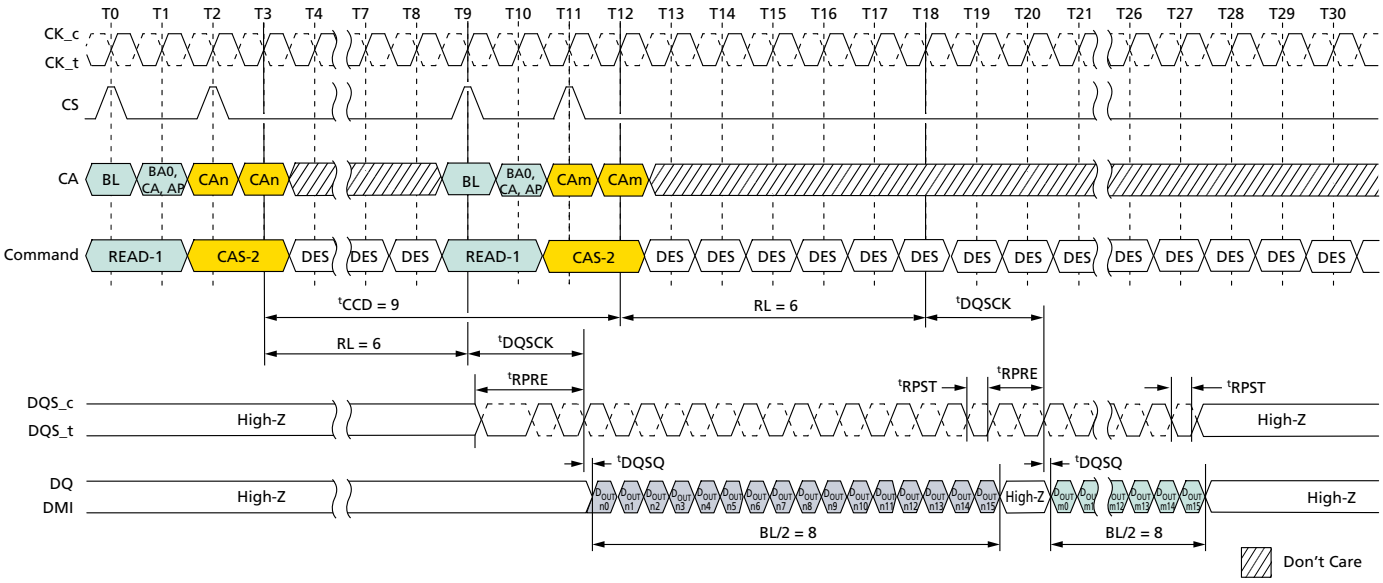

Notes:
1. BL = 16 for column *n* and column *m*; RL = 6; Preamble = Toggle; Postamble = 0.5*n*CK.
2. D_{OUT} *n*/*m* = data-out from column *n* and column *m*.

Micron Technology, Inc. reserves the right to change products or specifications without notice.
© 2017 Micron Technology, Inc. All rights reserved.

3. DES commands are shown for ease of illustration; other commands may be valid at these times.

Figure 41: Consecutive READ: ^{t}CCD = MIN + 1, Preamble = Static, 1.5*n*CK Postamble

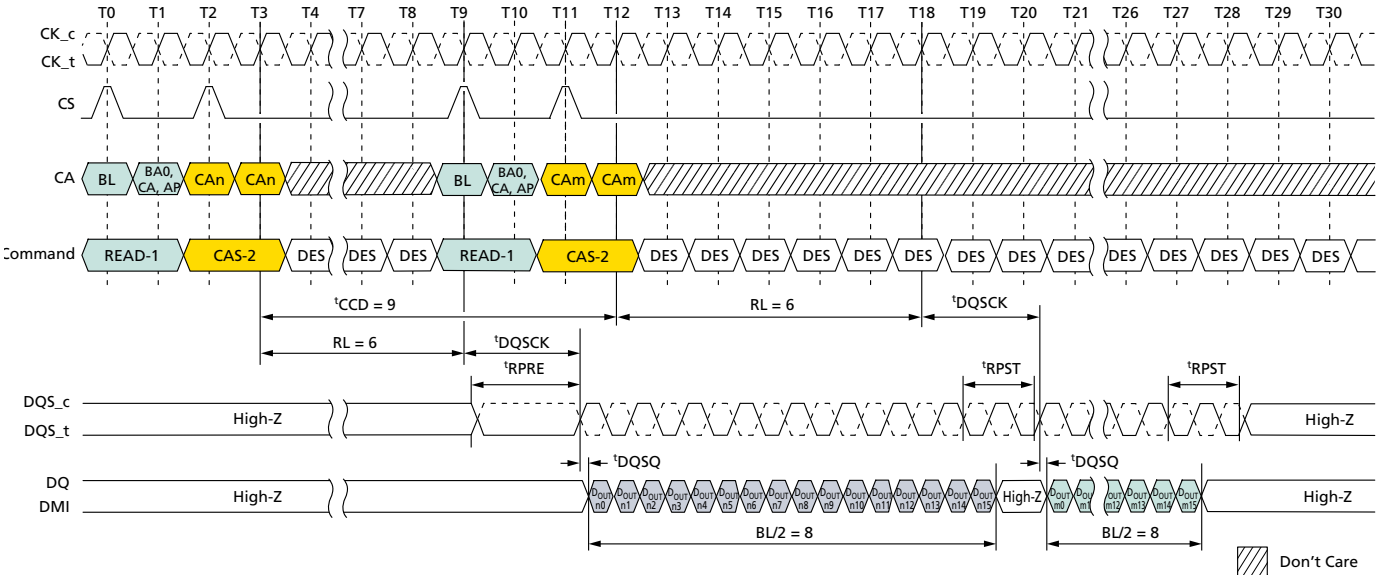

Notes:
1. BL = 16 for column *n* and column *m*; RL = 6; Preamble = Static; Postamble = 1.5*n*CK.
2. D_{OUT} *n*/*m* = data-out from column *n* and column *m*.
3. DES commands are shown for ease of illustration; other commands may be valid at these times.

Figure 42: Consecutive READ: ^{t}CCD = MIN + 1, Preamble = Static, 0.5*n*CK Postamble

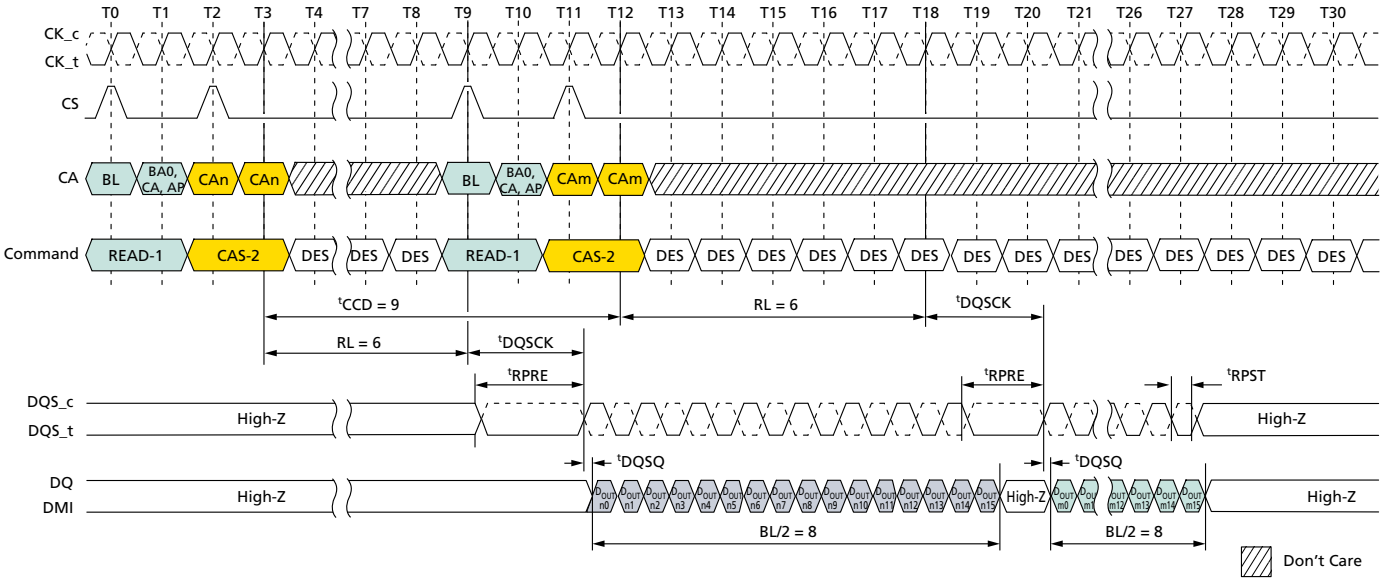

Notes:
1. BL = 16 for column *n* and column *m*; RL = 6; Preamble = Static; Postamble = 0.5*n*CK.

Micron Technology, Inc. reserves the right to change products or specifications without notice.
© 2017 Micron Technology, Inc. All rights reserved.

2. D_{OUT} *n/m* = data-out from column *n* and column *m*.
3. DES commands are shown for ease of illustration; other commands may be valid at these times.

Figure 43: Consecutive READ: ^{t}CCD = MIN + 2, Preamble = Toggle, 1.5*n*CK Postamble

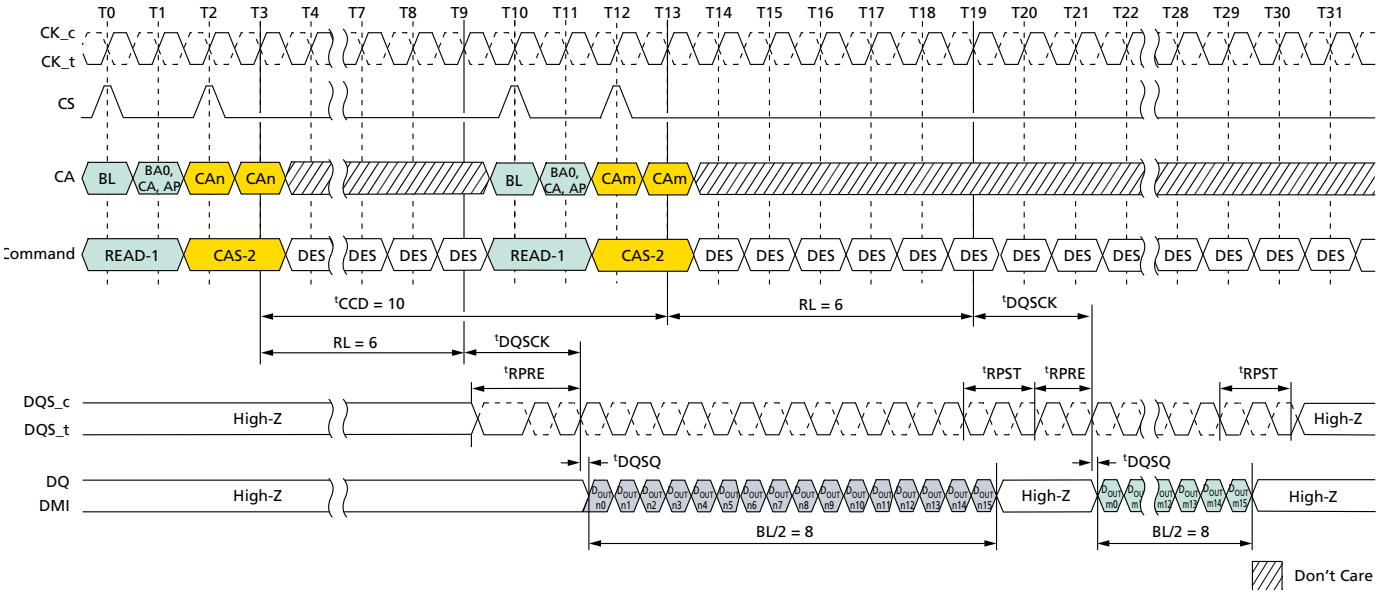

Notes:
1. BL = 16 for column *n* and column *m*; RL = 6; Preamble = Toggle; Postamble = 1.5*n*CK.
2. D_{OUT} *n/m* = data-out from column *n* and column *m*.
3. DES commands are shown for ease of illustration; other commands may be valid at these times.

Micron Technology, Inc. reserves the right to change products or specifications without notice.
© 2017 Micron Technology, Inc. All rights reserved.

Figure 44: Consecutive READ: ^{t}CCD = MIN + 2, Preamble = Toggle, 0.5*n*CK Postamble

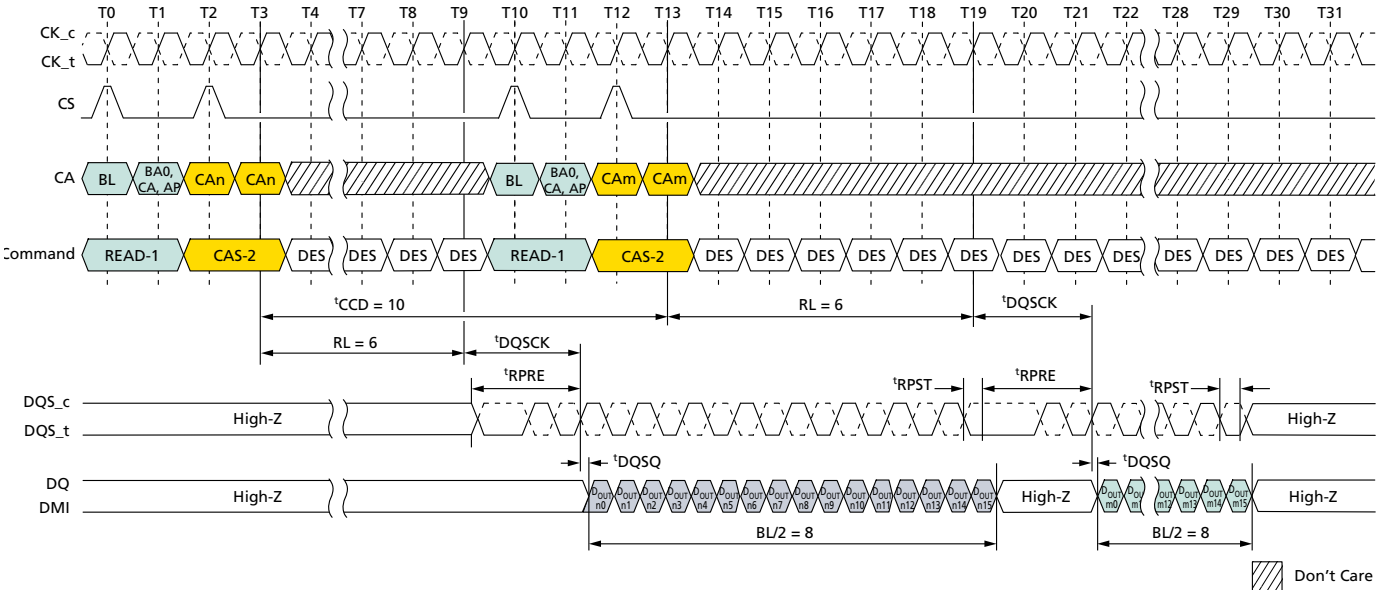

Notes:
1. BL = 16 for column *n* and column *m*; RL = 6; Preamble = Toggle; Postamble = 0.5*n*CK.
2. D_{OUT} *n*/*m* = data-out from column *n* and column *m*.
3. DES commands are shown for ease of illustration; other commands may be valid at these times.

Figure 45: Consecutive READ: ^{t}CCD = MIN + 2, Preamble = Static, 1.5*n*CK Postamble

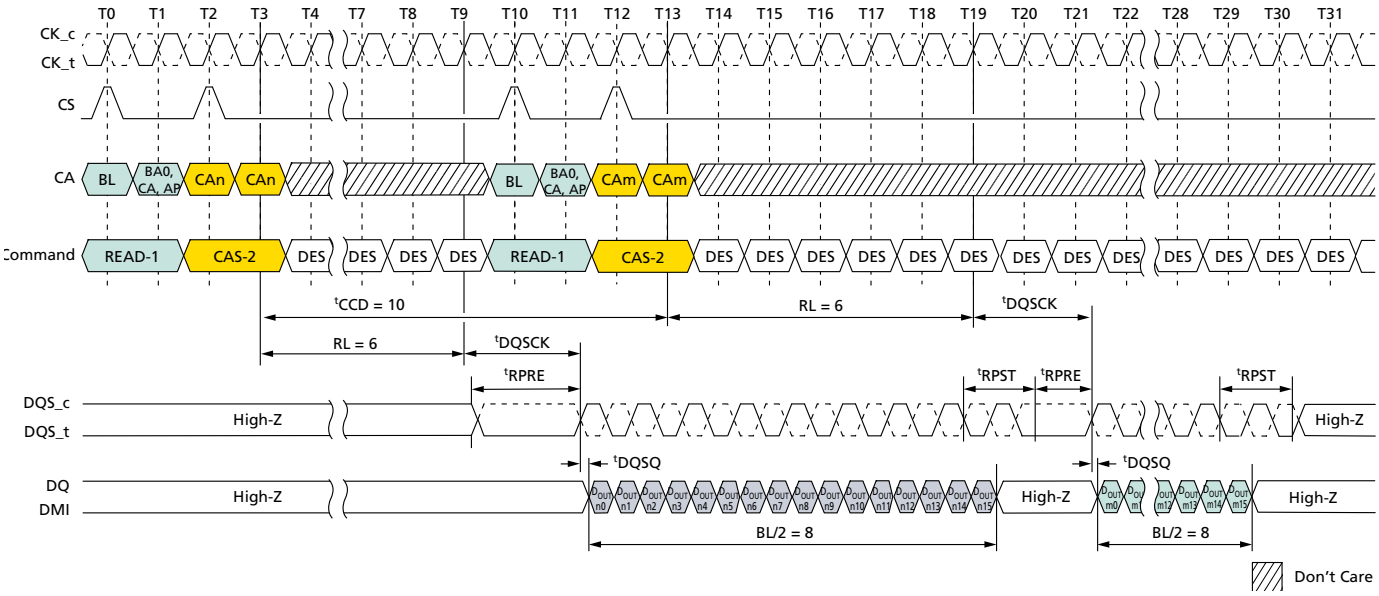

Notes:
1. BL = 16 for column *n* and column *m*; RL = 6; Preamble = Static; Postamble = 1.5*n*CK.
2. D_{OUT} *n*/*m* = data-out from column *n* and column *m*.

Micron Technology, Inc. reserves the right to change products or specifications without notice.
© 2017 Micron Technology, Inc. All rights reserved.

3. DES commands are shown for ease of illustration; other commands may be valid at these times.

Figure 46: Consecutive READ: ^{t}CCD = MIN + 2, Preamble = Static, 0.5*n*CK Postamble

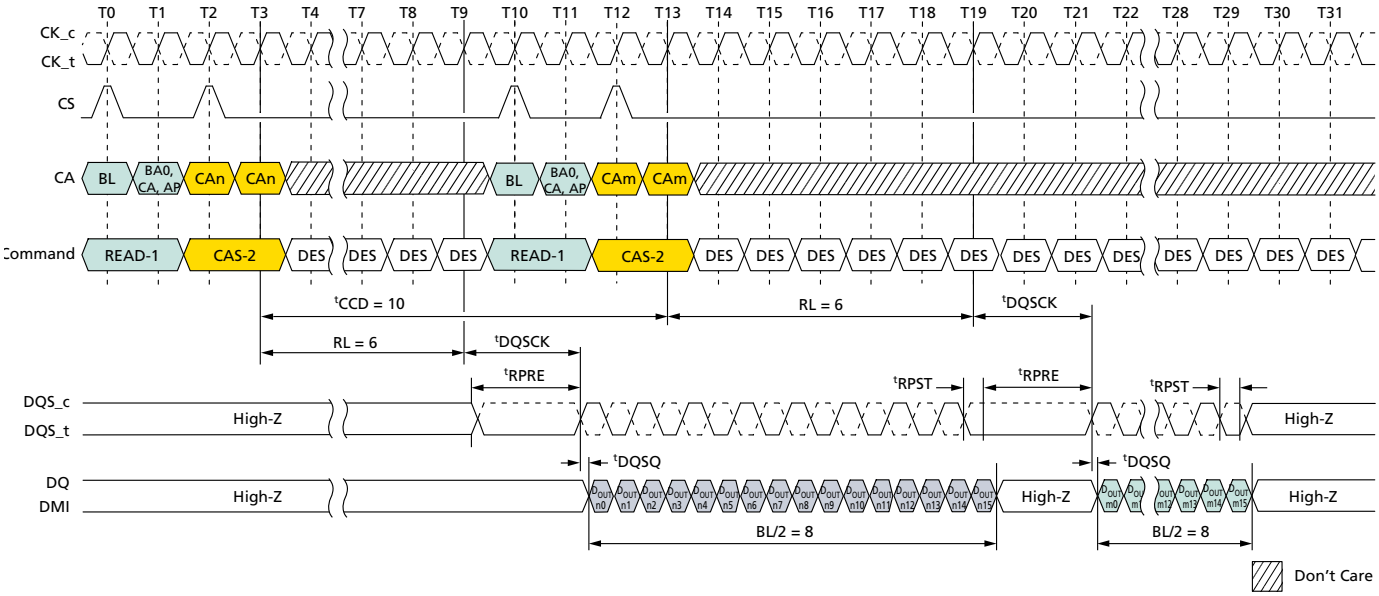

Notes:
1. BL = 16 for column *n* and column *m*; RL = 6; Preamble = Static; Postamble = 0.5*n*CK.
2. D_{OUT} *n/m* = data-out from column *n* and column *m*.
3. DES commands are shown for ease of illustration; other commands may be valid at these times.

Micron Technology, Inc. reserves the right to change products or specifications without notice.
© 2017 Micron Technology, Inc. All rights reserved.

Figure 47: Consecutive READ: ^{t}CCD = MIN + 3, Preamble = Toggle, 1.5*n*CK Postamble

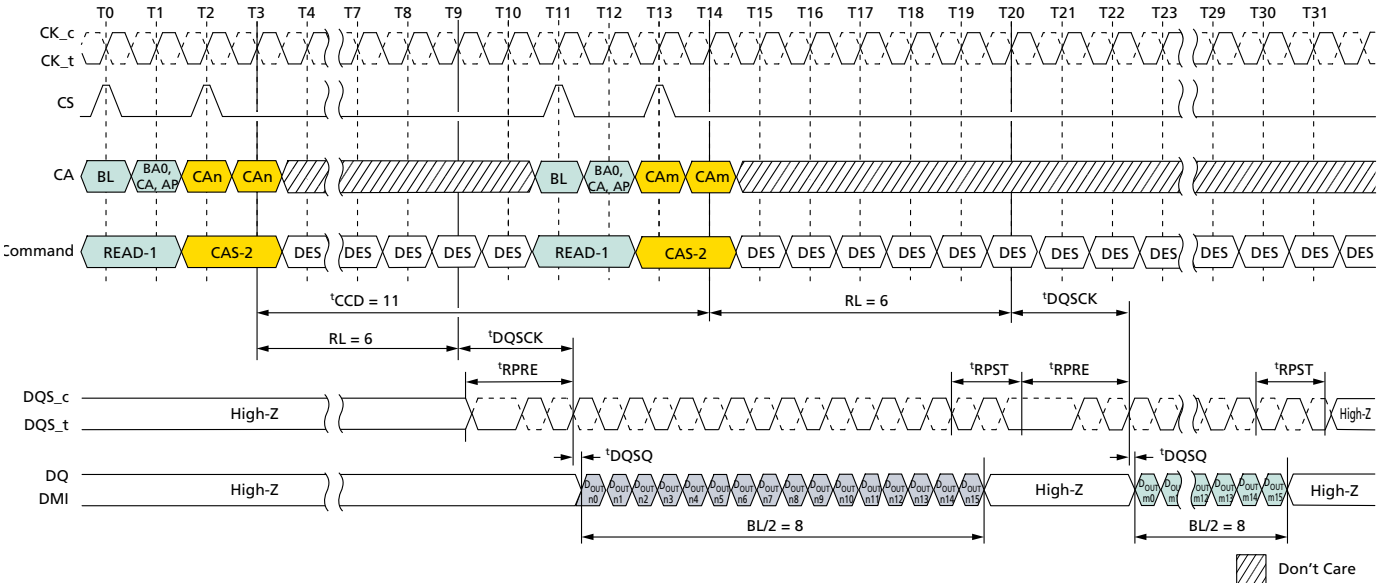

Notes:
1. BL = 16 for column *n* and column *m*; RL = 6; Preamble = Toggle; Postamble = 1.5*n*CK.
2. D_{OUT} *n*/*m* = data-out from column *n* and column *m*.
3. DES commands are shown for ease of illustration; other commands may be valid at these times.

Figure 48: Consecutive READ: ^{t}CCD = MIN + 3, Preamble = Toggle, 0.5*n*CK Postamble

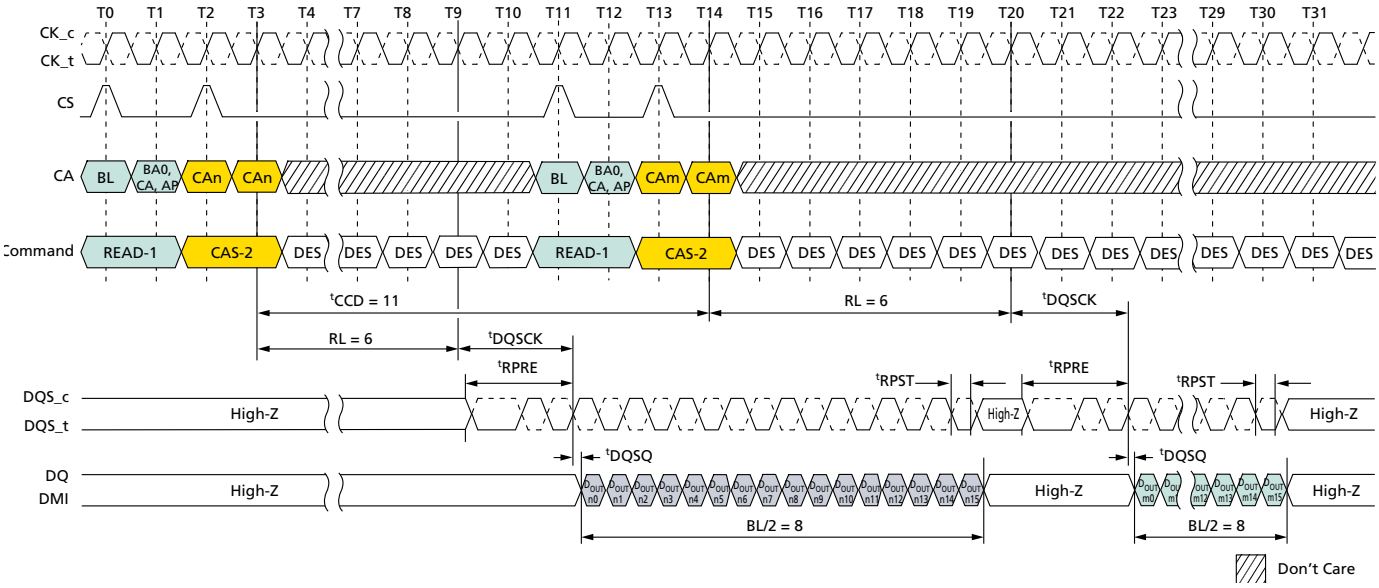

Notes:
1. BL = 16 for column *n* and column *m*; RL = 6; Preamble = Toggle; Postamble = 0.5*n*CK.
2. D_{OUT} *n*/*m* = data-out from column *n* and column *m*.
3. DES commands are shown for ease of illustration; other commands may be valid at these times.

Micron Technology, Inc. reserves the right to change products or specifications without notice.
© 2017 Micron Technology, Inc. All rights reserved.

Figure 49: Consecutive READ: ^{t}CCD = MIN + 3, Preamble = Static, 1.5*n*CK Postamble

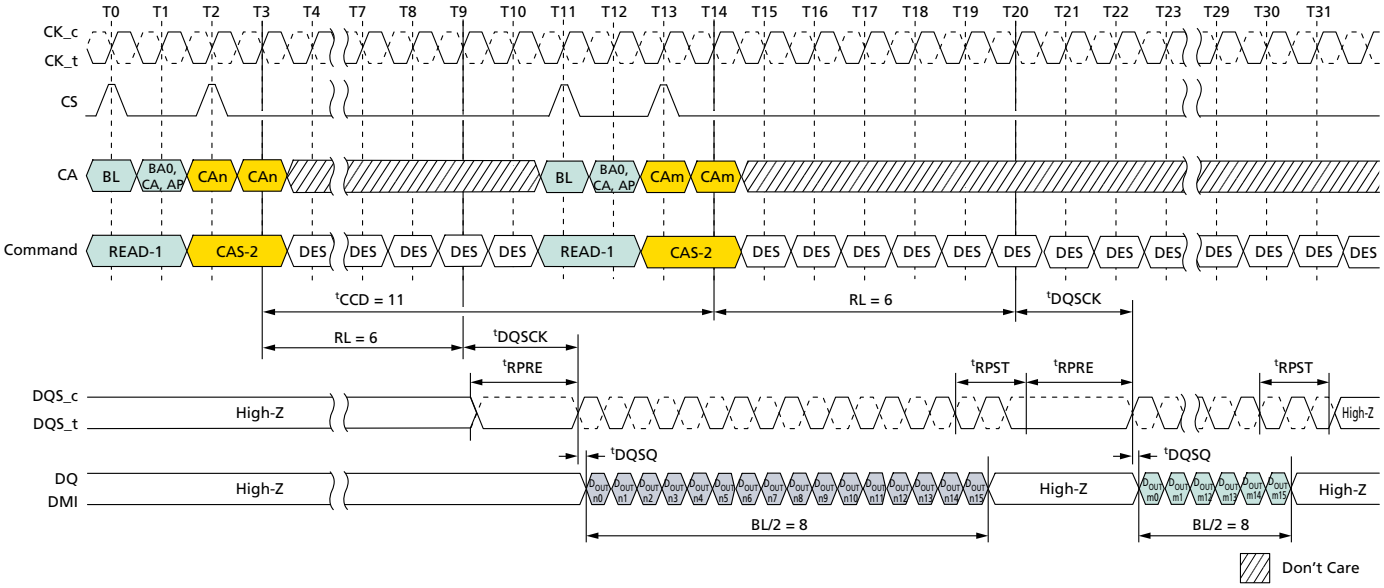

Notes:
1. BL = 16 for column *n* and column *m*; RL = 6; Preamble = Static; Postamble = 1.5*n*CK.
2. D_{OUT} *n*/*m* = data-out from column *n* and column *m*.
3. DES commands are shown for ease of illustration; other commands may be valid at these times.

Figure 50: Consecutive READ: ^{t}CCD = MIN + 3, Preamble = Static, 0.5*n*CK Postamble

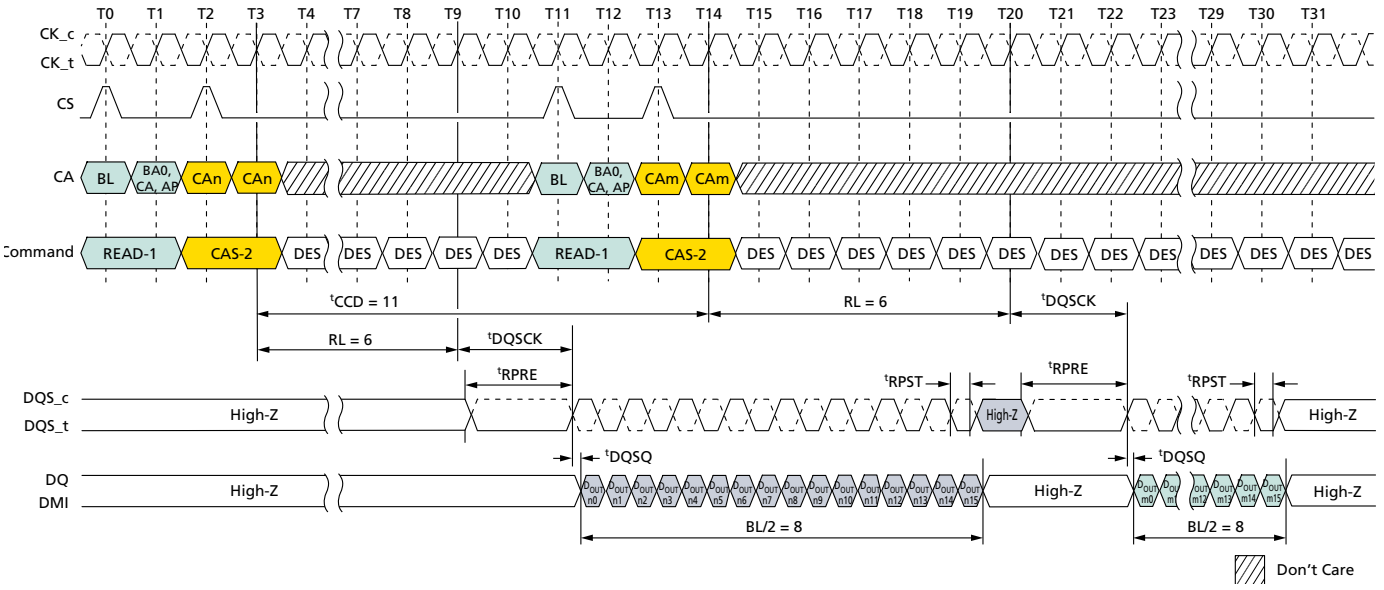

Notes:
1. BL = 16 for column *n* and column *m*; RL = 6, Preamble = Static; Postamble = 0.5*n*CK
2. D_{OUT} *n*/*m* = data-out from column *n* and column *m*.
3. DES commands are shown for ease of illustration; other commands may be valid at these times.

Micron Technology, Inc. reserves the right to change products or specifications without notice.
© 2017 Micron Technology, Inc. All rights reserved.

WRITE-to-WRITE Operations – Seamless

Figure 51: Seamless WRITE: ^{t}CCD = MIN, 0.5*n*CK Postamble

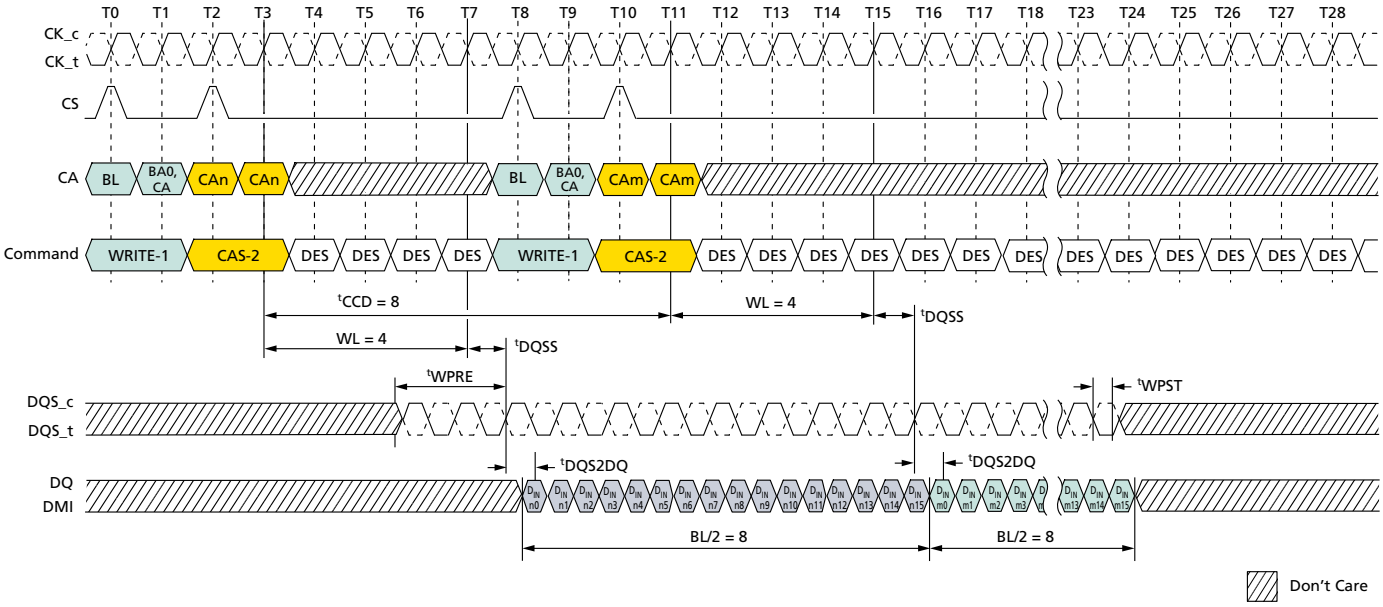

Notes:
1. BL = 16, Write postamble = 0.5*n*CK.
2. D_{IN} *n*/*m* = data-in from column *n* and column *m*.
3. The minimum number of clock cycles from the burst WRITE command to the burst WRITE command for any bank is BL/2.
4. DES commands are shown for ease of illustration; other commands may be valid at these times.

Micron Technology, Inc. reserves the right to change products or specifications without notice.
© 2017 Micron Technology, Inc. All rights reserved.

Figure 52: Seamless WRITE: ^{t}CCD = MIN, 1.5*n*CK Postamble, 533 MHz < Clock Frequency ≤ 800 MHz, ODT Worst Timing Case

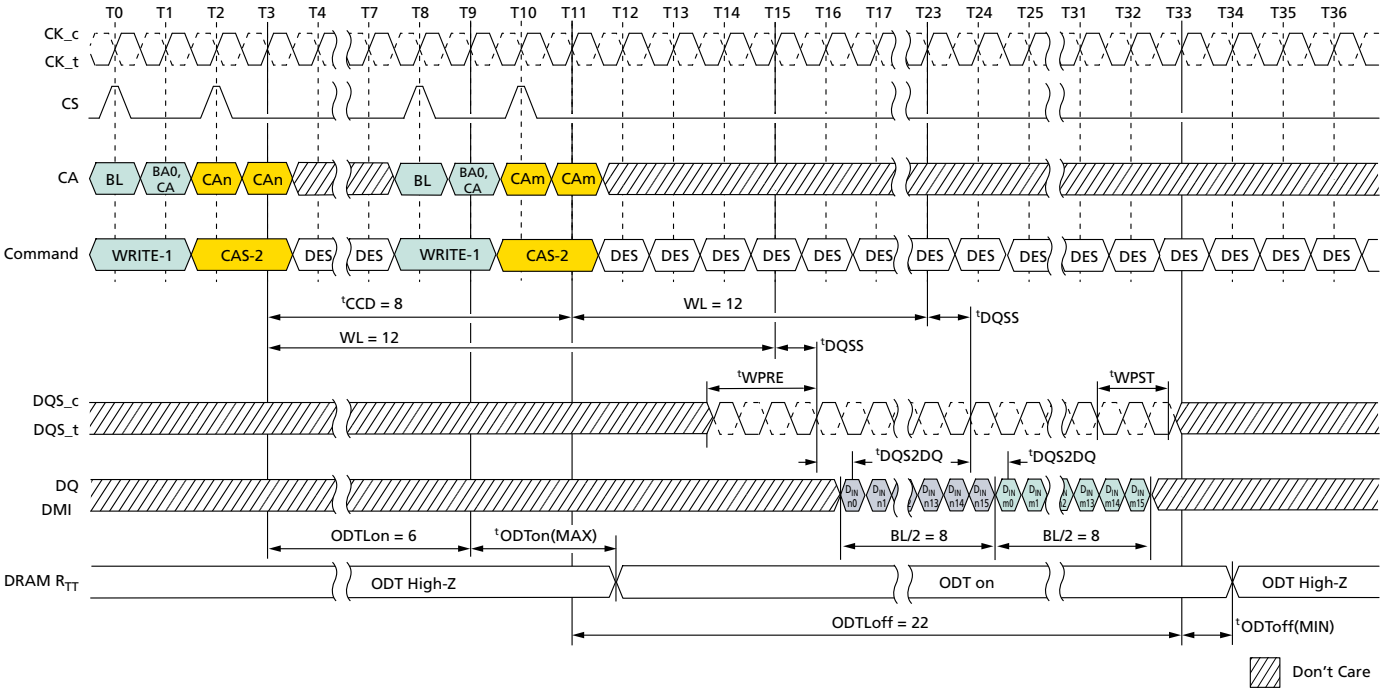

Notes:
1. Clock frequency = 800 MHz, ^{t}CK(AVG) = 1.25ns.
2. BL = 16, Write postamble = 1.5*n*CK.
3. D_{IN} *n*/*m* = data-in from column *n* and column *m*.
4. The minimum number of clock cycles from the burst WRITE command to the burst WRITE command for any bank is BL/2.
5. DES commands are shown for ease of illustration; other commands may be valid at these times.

Micron Technology, Inc. reserves the right to change products or specifications without notice.
© 2017 Micron Technology, Inc. All rights reserved.

Figure 53: Seamless WRITE: ^{t}CCD = MIN, 1.5*n*CK Postamble

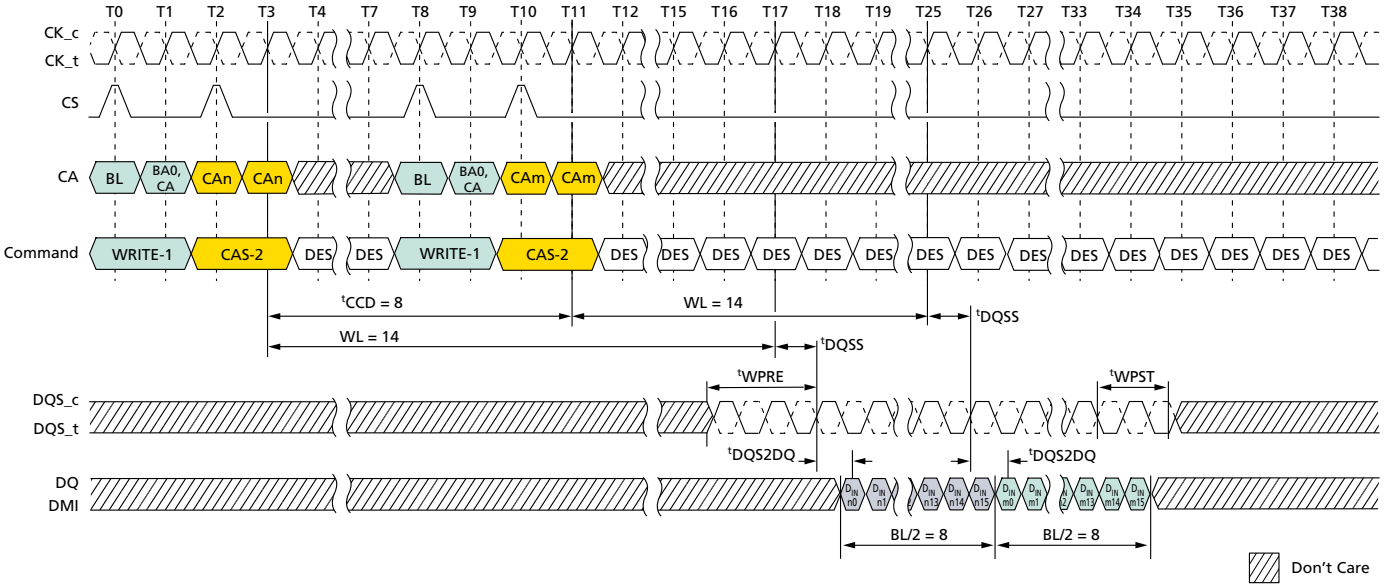

Notes:
1. BL = 16, Write postamble = 1.5*n*CK.
2. D_{IN} *n*/*m* = data-in from column *n* and column *m*.
3. The minimum number of clock cycles from the burst WRITE command to the burst WRITE command for any bank is BL/2.
4. DES commands are shown for ease of illustration; other commands may be valid at these times.

Micron Technology, Inc. reserves the right to change products or specifications without notice.
© 2017 Micron Technology, Inc. All rights reserved.

WRITE-to-WRITE Operations – Consecutive

Figure 54: Consecutive WRITE: ^{t}CCD = MIN + 1, 0.5*n*CK Postamble

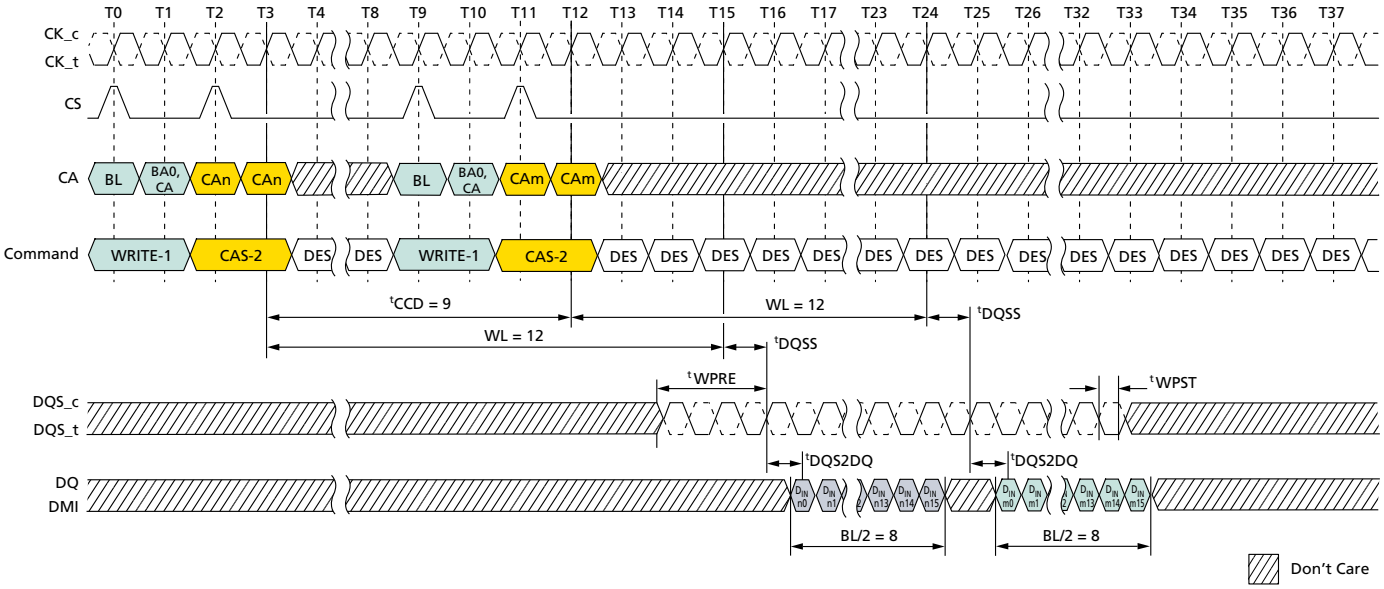

Notes:
1. BL = 16, Write postamble = 0.5*n*CK.
2. D_{IN} *n/m* = data-in from column *n* and column *m*.
3. DES commands are shown for ease of illustration; other commands may be valid at these times.

Figure 55: Consecutive WRITE: ^{t}CCD = MIN + 1, 1.5*n*CK Postamble

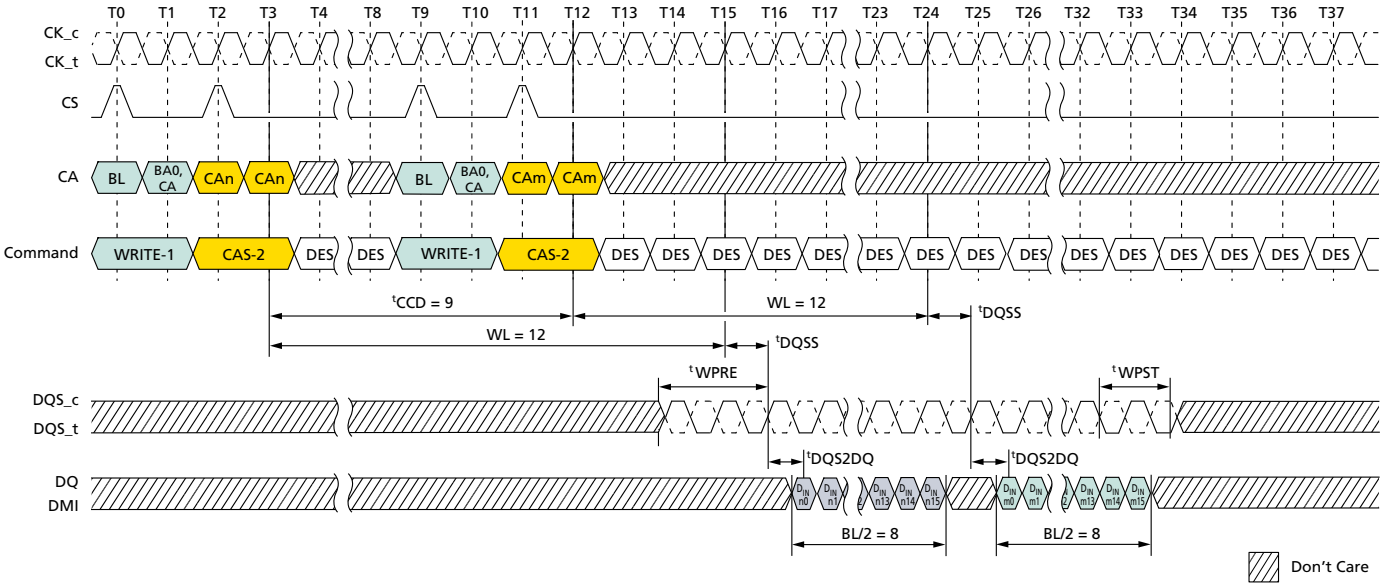

Notes:
1. BL = 16, Write postamble = 1.5*n*CK.
2. D_{IN} *n/m* = data-in from column *n* and column *m*.

Micron Technology, Inc. reserves the right to change products or specifications without notice.
© 2017 Micron Technology, Inc. All rights reserved.

3. DES commands are shown for ease of illustration; other commands may be valid at these times.

Figure 56: Consecutive WRITE: ^{t}CCD = MIN + 2, 0.5*n*CK Postamble

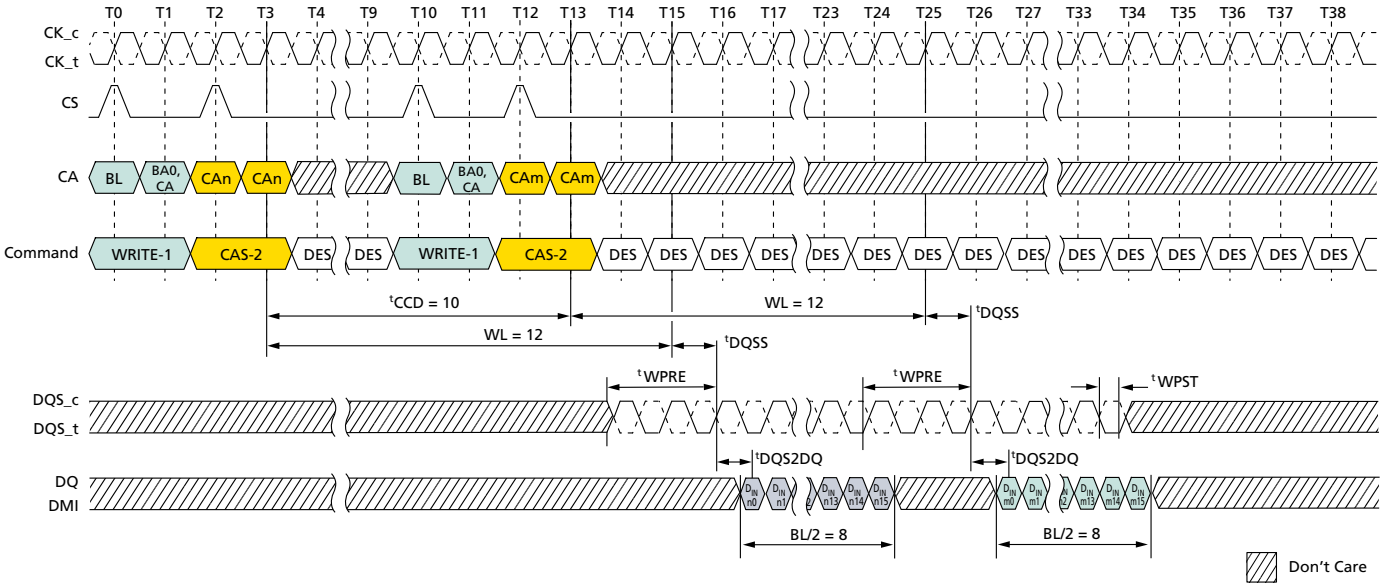

Notes:
1. BL = 16, Write postamble = 0.5*n*CK.
2. D_{IN} *n/m* = data-in from column *n* and column *m*.
3. DES commands are shown for ease of illustration; other commands may be valid at these times.

Figure 57: Consecutive WRITE: ^{t}CCD = MIN + 2, 1.5*n*CK Postamble

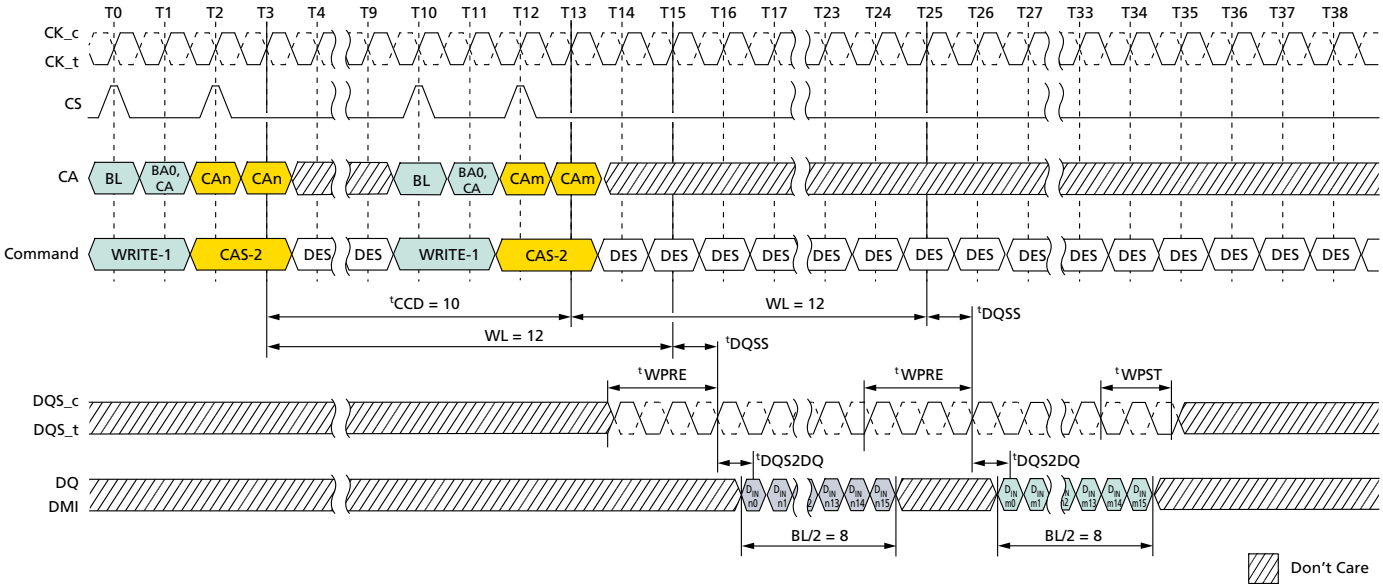

Notes:
1. BL = 16, Write postamble = 1.5*n*CK.

Micron Technology, Inc. reserves the right to change products or specifications without notice.
© 2017 Micron Technology, Inc. All rights reserved.

2. D_{IN} *n/m* = data-in from column *n* and column *m*.
3. DES commands are shown for ease of illustration; other commands may be valid at these times.

Figure 58: Consecutive WRITE: ^{t}CCD = MIN + 3, 0.5*n*CK Postamble

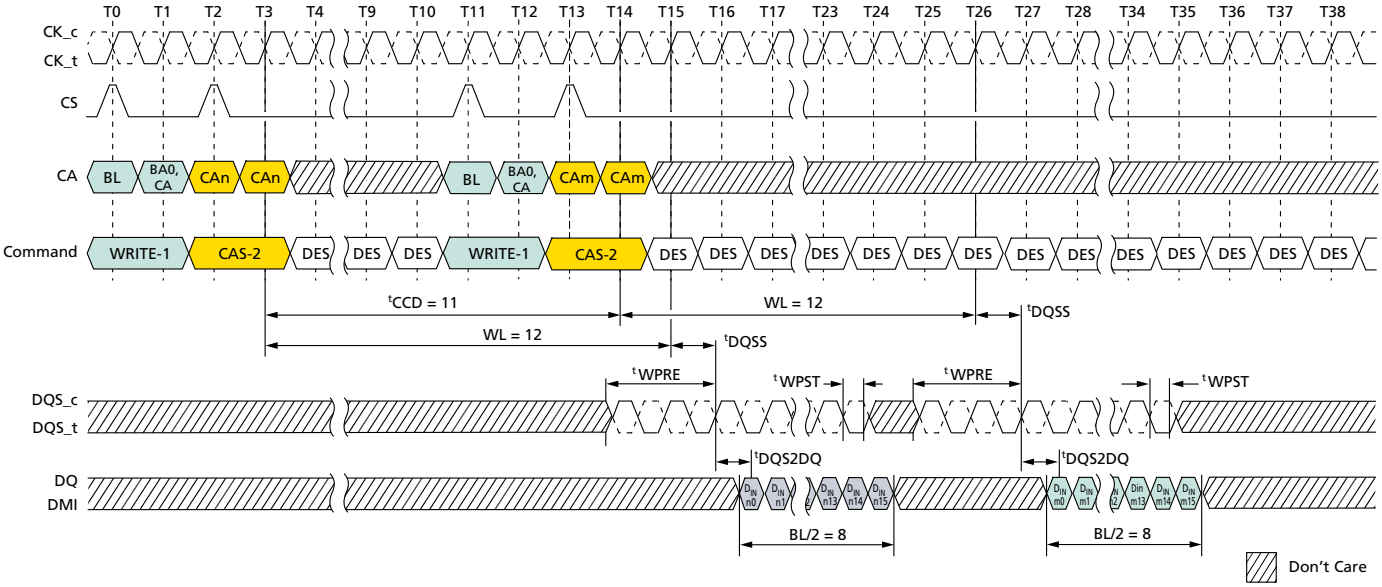

Notes:
1. BL = 16, Write postamble = 0.5*n*CK.
2. D_{IN} *n/m* = data-in from column *n* and column *m*.
3. DES commands are shown for ease of illustration; other commands may be valid at these times.

Micron Technology, Inc. reserves the right to change products or specifications without notice.
© 2017 Micron Technology, Inc. All rights reserved.

Figure 59: Consecutive WRITE: ^{t}CCD = MIN + 3, 1.5*n*CK Postamble

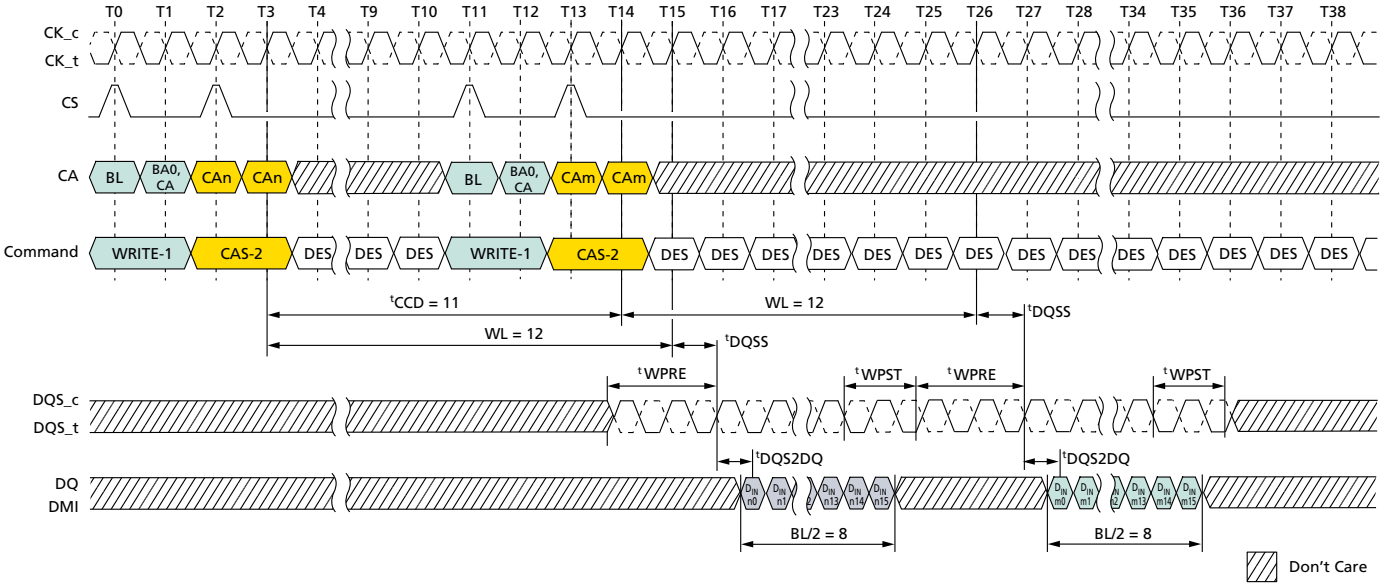

Notes:
1. BL = 16, Write postamble = 1.5*n*CK.
2. D_{IN} *n/m* = data-in from column *n* and column *m*.
3. DES commands are shown for ease of illustration; other commands may be valid at these times.

Figure 60: Consecutive WRITE: ^{t}CCD = MIN + 4, 1.5*n*CK Postamble

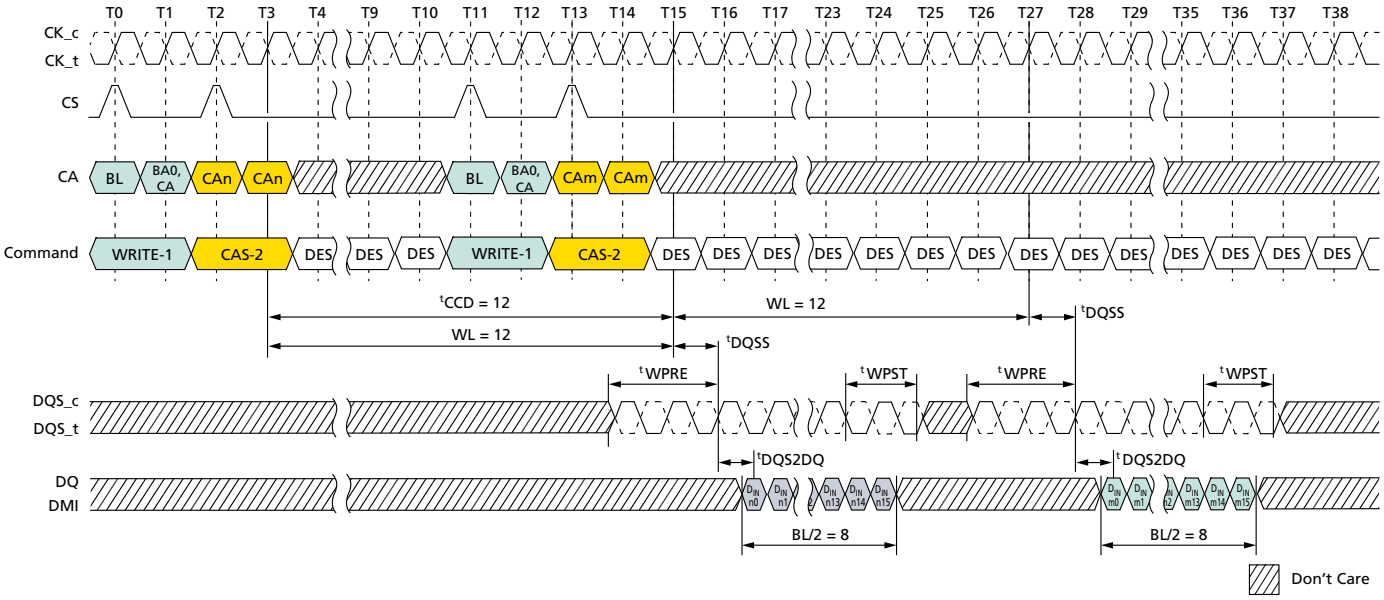

Notes:
1. BL = 16, Write postamble = 1.5*n*CK.
2. D_{IN} *n/m* = data-in from column *n* and column *m*.
3. DES commands are shown for ease of illustration; other commands may be valid at these times.

Micron Technology, Inc. reserves the right to change products or specifications without notice.
© 2017 Micron Technology, Inc. All rights reserved.

PRECHARGE Operation

The PRECHARGE command is used to precharge or close a bank that has been activated. The PRECHARGE command is initiated with CKE, CS, and CA[5:0] in the proper state (see Command Truth Table). The PRECHARGE command can be used to precharge each bank independently or all banks simultaneously. The all banks (AB) flag and the bank address bit are used to determine which bank(s) to precharge. The precharged bank(s) will be available for subsequent row access ^{t}RPab after an all-bank PRECHARGE command is issued, or ^{t}RPpb after a single-bank PRECHARGE command is issued.

To ensure that the device can meet the instantaneous current demands, the row precharge time for an all-bank PRECHARGE (^{t}RPab) is longer than the per-bank precharge time (^{t}RPpb).

Table 104: Precharge Bank Selection

AB (CA[5], R1)	BA2 (CA[2], R2)	BA1 (CA[1], R2)	BA0 (CA[0], R2)	Precharged Bank
0	0	0	0	Bank 0 only
0	0	0	1	Bank 1 only
0	0	1	0	Bank 2 only
0	0	1	1	Bank 3 only
0	1	0	0	Bank 4 only
0	1	0	1	Bank 5 only
0	1	1	0	Bank 6 only
0	1	1	1	Bank 7 only
1	Don't Care	Don't Care	Don't Care	All banks

Burst READ Operation Followed by Precharge

The PRECHARGE command can be issued as early as BL/2 clock cycles after a READ command, but the PRECHARGE command cannot be issued until after ^{t}RAS is satisfied. A new bank ACTIVATE command can be issued to the same bank after the row precharge time (^{t}RP) has elapsed. The minimum read-to-precharge time must also satisfy a minimum analog time from the second rising clock edge of the CAS-2 command. ^{t}RTP begins BL/2 - 8 clock cycles after the READ command.

Micron Technology, Inc. reserves the right to change products or specifications without notice.
© 2017 Micron Technology, Inc. All rights reserved.

Figure 61: Burst READ Followed by Precharge – BL16, Toggling Preamble, 0.5*n*CK Postamble

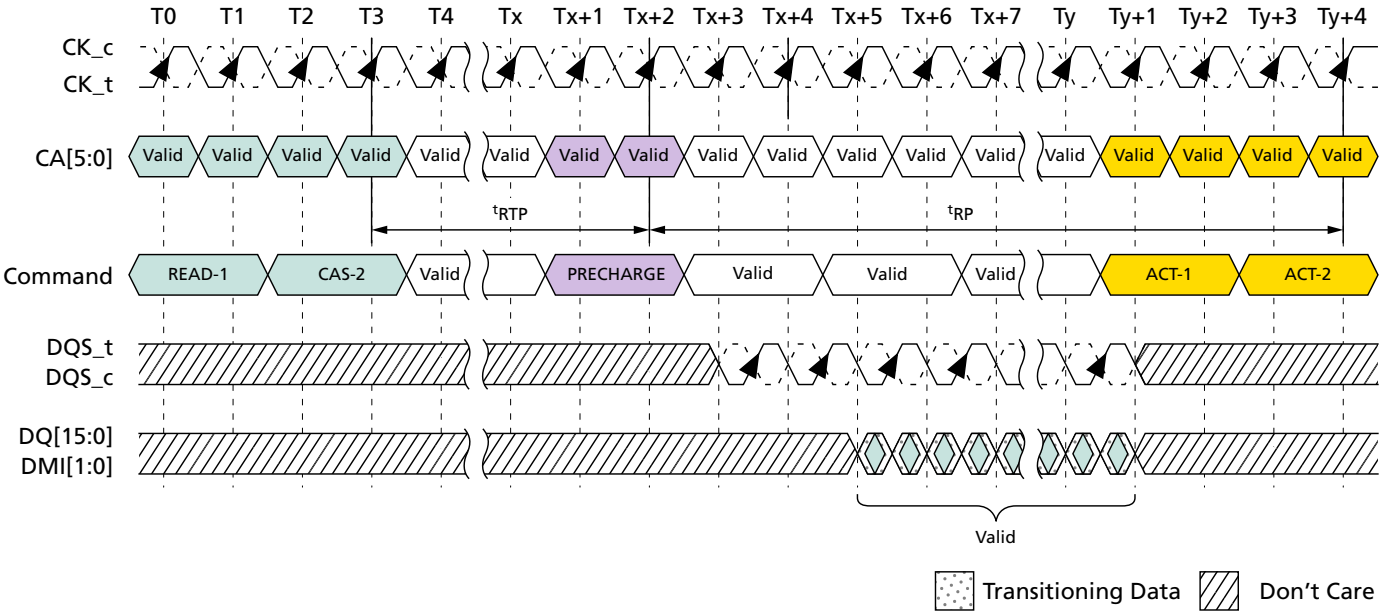

Figure 62: Burst READ Followed by Precharge – BL32, 2tCK, 0.5*n*CK Postamble

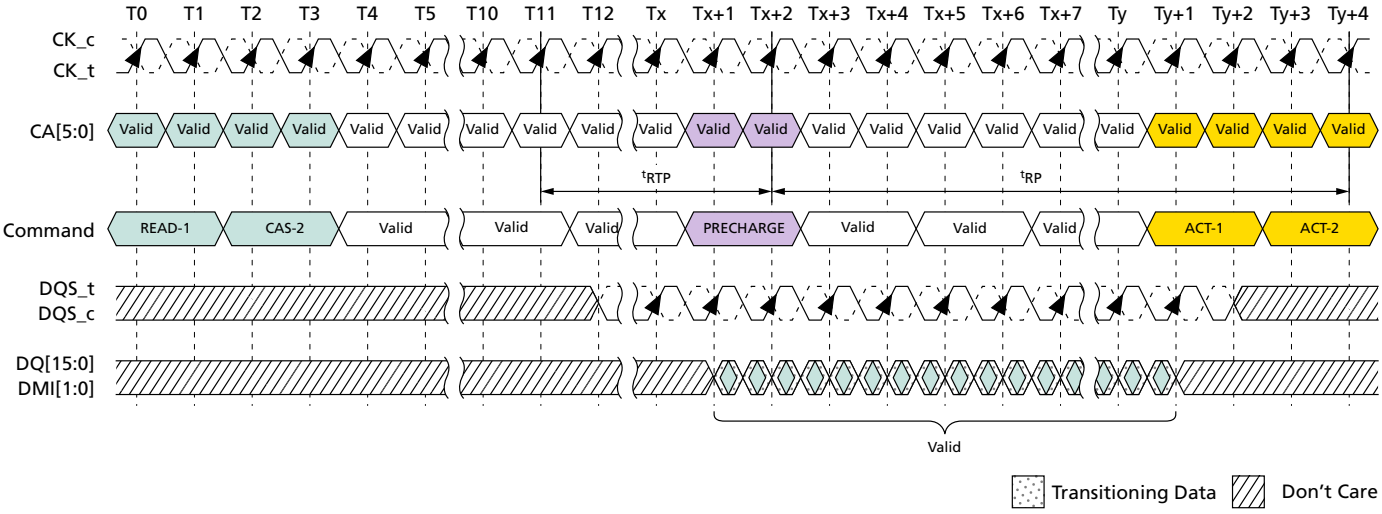

Burst WRITE Followed by Precharge

A write recovery time (^{t}WR) must be provided before a PRECHARGE command may be issued. This delay is referenced from the next rising edge of CK after the last valid DQS clock of the burst.

Devices write data to the memory array in prefetch multiples (prefetch = 16). An internal WRITE operation can only begin after a prefetch group has been clocked; therefore, ^{t}WR starts at the prefetch boundaries. The minimum write-to-precharge time for commands to the same bank is WL + BL/2 + 1 + RU(^{t}WR / ^{t}CK) clock cycles.

Micron Technology, Inc. reserves the right to change products or specifications without notice.
© 2017 Micron Technology, Inc. All rights reserved.

Figure 63: Burst WRITE Followed by PRECHARGE – BL16, 2*n*CK Preamble, 0.5*n*CK Postamble

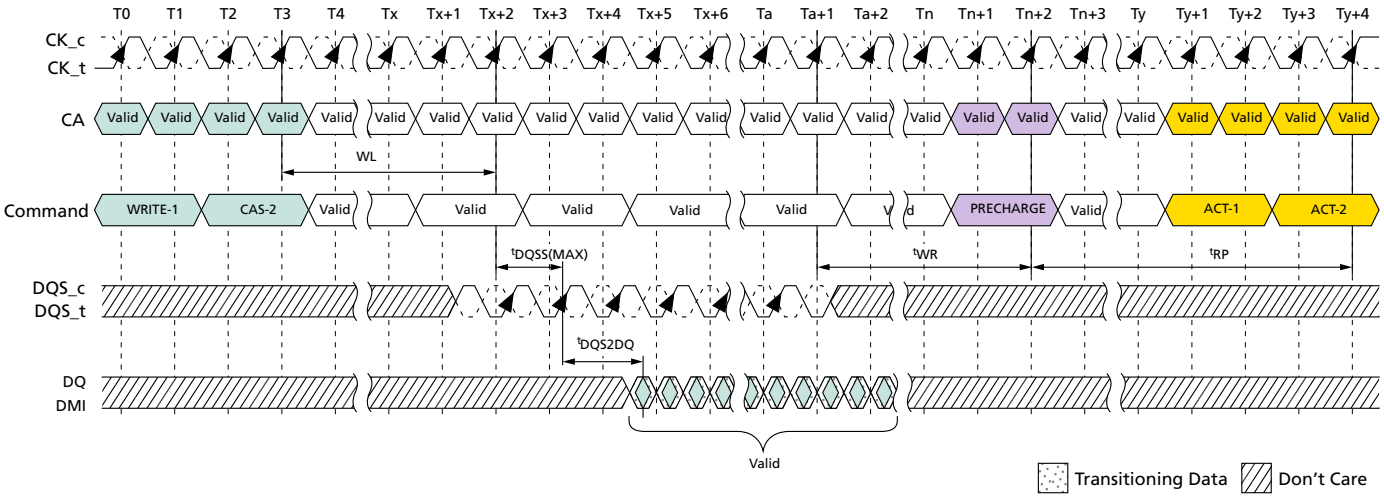

Auto Precharge

Before a new row can be opened in an active bank, the active bank must be precharged using either the PRECHARGE command or the auto precharge (AP) function. When a READ or a WRITE command is issued to the device, the AP bit (CA5) can be set to enable the active bank to automatically begin precharge at the earliest possible moment during the burst READ or WRITE cycle.

If AP is LOW when the READ or WRITE command is issued, the normal READ or WRITE burst operation is executed, and the bank remains active at the completion of the burst.

If AP is HIGH when the READ or WRITE command is issued, the auto PRECHARGE function is engaged. This feature enables the PRECHARGE operation to be partially or completely hidden during burst READ cycles (dependent upon READ or WRITE latency), thus improving system performance for random data access.

Burst READ With Auto Precharge

If AP is HIGH when a READ command is issued, the READ with AUTO PRECHARGE function is engaged. The devices start an AUTO PRECHARGE operation on the rising edge of the clock at BL/2 after the second beat of the READ w/AP command, or BL/4 - 4 + RU(^{t}RTP/^{t}CK) clock cycles after the second beat of the READ w/AP command, whichever is greater. Following an AUTO PRECHARGE operation, an ACTIVATE command can be issued to the same bank if the following two conditions are both satisfied:

1. The RAS precharge time (^{t}RP) has been satisfied from the clock at which the auto precharge began, and
2. The RAS cycle time (^{t}RC) from the previous bank activation has been satisfied.

Micron Technology, Inc. reserves the right to change products or specifications without notice.
© 2017 Micron Technology, Inc. All rights reserved.

Figure 64: Burst READ With Auto Precharge – BL16, Non-Toggling Preamble, 0.5*n*CK Postamble

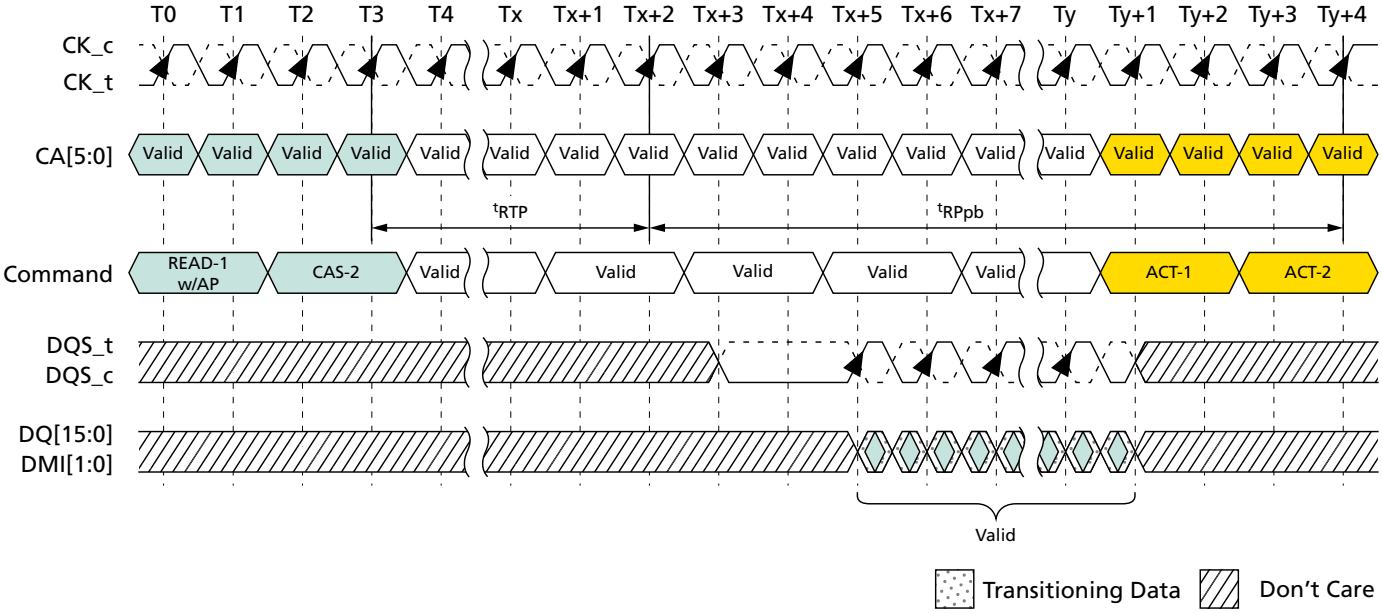

Figure 65: Burst READ With Auto Precharge – BL32, Toggling Preamble, 1.5*n*CK Postamble

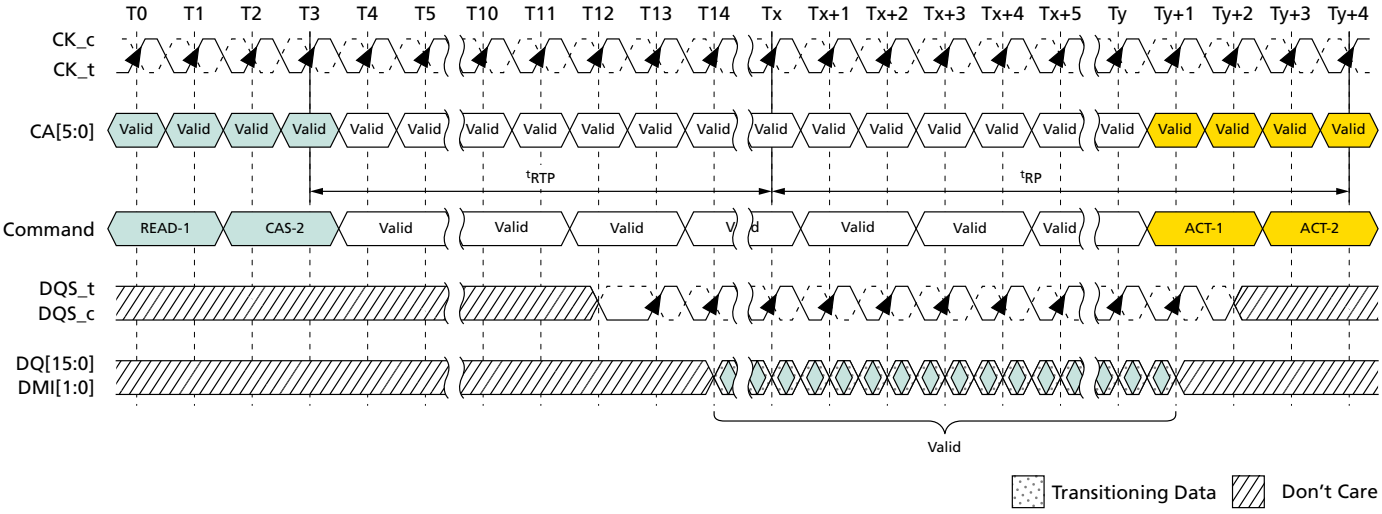

Burst WRITE With Auto Precharge

If AP is HIGH when a WRITE command is issued, the WRITE with AUTO PRECHARGE function is engaged. The device starts an auto precharge on the rising edge ^{t}WR cycles after the completion of the burst WRITE.

Following a WRITE with AUTO PRECHARGE, an ACTIVATE command can be issued to the same bank if the following conditions are met:

1. The RAS precharge time (^{t}RP) has been satisfied from the clock at which the auto precharge began, and

Micron Technology, Inc. reserves the right to change products or specifications without notice.
© 2017 Micron Technology, Inc. All rights reserved.

2. The RAS cycle time (^{t}RC) from the previous bank activation has been satisfied.

Figure 66: Burst WRITE With Auto Precharge – BL16, 2*n*CK Preamble, 0.5*n*CK Postamble

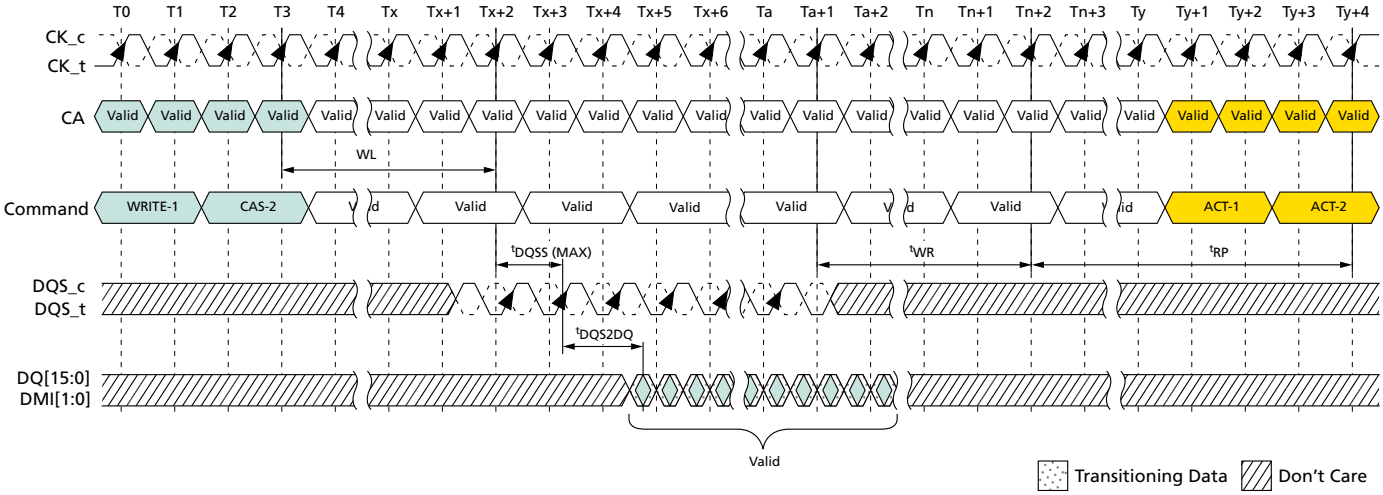

Table 105: Timing Between Commands (PRECHARGE and AUTO PRECHARGE): DQ ODT is Disable

From Command	To Command	Minimum Delay Between "From Command" and "To Command"	Unit	Notes
READ BL = 16	PRECHARGE (to same bank as READ)	^{t}RTP	^{t}CK	1, 6
	PRECHARGE ALL	^{t}RTP	^{t}CK	1, 6
READ BL = 32	PRECHARGE (to same bank as READ)	8^{t}CK + ^{t}RTP	^{t}CK	1, 6
	PRECHARGE ALL	8^{t}CK + ^{t}RTP	^{t}CK	1, 6
READ w/AP BL = 16	PRECHARGE (to same bank as READ w/AP)	*n*RTP	^{t}CK	1, 10
	PRECHARGE ALL	*n*RTP	^{t}CK	1, 10
	ACTIVATE (to same bank as READ w/AP)	*n*RTP + ^{t}RPpb	^{t}CK	1, 8, 10
	WRITE or WRITE w/AP (same bank)	Illegal	–	
	MASK-WR or MASK-WR w/AP (same bank)	Illegal	–	
	WRITE or WRITE w/AP (different bank)	RL + RU(^{t}DQSCK(MAX)/^{t}CK) + BL/2 + RD(^{t}RPST) - WL + ^{t}WPRE	^{t}CK	3, 4, 5
	MASK-WR or MASK-WR w/AP (different bank)	RL + RU(^{t}DQSCK(MAX)/^{t}CK) + BL/2 + RD(^{t}RPST) - WL + ^{t}WPRE	^{t}CK	3, 4, 5
	READ or READ w/AP (same bank)	Illegal	–	
	READ or READ w/AP (different bank)	BL/2	^{t}CK	3

Micron Technology, Inc. reserves the right to change products or specifications without notice.
© 2017 Micron Technology, Inc. All rights reserved.

Table 105: Timing Between Commands (PRECHARGE and AUTO PRECHARGE): DQ ODT is Disable (Continued)

From Command	To Command	Minimum Delay Between "From Command" and "To Command"	Unit	Notes
READ w/AP BL = 32	PRECHARGE (to same bank as READ w/AP)	8^{t}CK + *n*RTP	^{t}CK	1, 10
	PRECHARGE ALL	8^{t}CK + *n*RTP	^{t}CK	1, 10
	ACTIVATE (to same bank as READ w/AP)	8^{t}CK + *n*RTP + ^{t}RPpb	^{t}CK	1, 8, 10
	WRITE or WRITE w/AP (same bank)	Illegal	–	
	MASK-WR or MASK-WR w/AP (same bank)	Illegal	–	
	WRITE or WRITE w/AP (different bank)	RL + RU(^{t}DQSCK(MAX)/^{t}CK) + BL/2 + RD(^{t}RPST) - WL + ^{t}WPRE	^{t}CK	3, 4, 5
	MASK-WR or MASK-WR w/AP (different bank)	RL + RU(^{t}DQSCK(MAX)/^{t}CK) + BL/2 + RD(^{t}RPST) - WL + ^{t}WPRE	^{t}CK	3, 4, 5
	READ or READ w/AP (same bank)	Illegal	–	
	READ or READ w/AP (different bank)	BL/2	^{t}CK	3
WRITE BL = 16 and 32	PRECHARGE (to same bank as WRITE)	WL + BL/2 + ^{t}WR + 1	^{t}CK	1, 7
	PRECHARGE ALL	WL + BL/2 + ^{t}WR + 1	^{t}CK	1, 7
MASK-WR BL = 16	PRECHARGE (to same bank as MASK-WR)	WL + BL/2 + ^{t}WR + 1	^{t}CK	1, 7
	PRECHARGE ALL	WL + BL/2 + ^{t}WR + 1	^{t}CK	1, 7
WRITE w/AP BL = 16 and 32	PRECHARGE (to same bank as WRITE w/AP)	WL + BL/2 + *n*WR + 1	^{t}CK	1, 11
	PRECHARGE ALL	WL + BL/2 + *n*WR + 1	^{t}CK	1, 11
	ACTIVATE (to same bank as WRITE w/AP)	WL + BL/2 + *n*WR + 1 + ^{t}RPpb	^{t}CK	1, 8, 11
	WRITE or WRITE w/AP (same bank)	Illegal	–	
	READ or READ w/AP (same bank)	Illegal	–	
	WRITE or WRITE w/AP (different bank)	BL/2	^{t}CK	3
	MASK-WR or MASK-WR w/AP (different bank)	BL/2	^{t}CK	3
	READ or READ w/AP (different bank)	WL + BL/2 + ^{t}WTR + 1	^{t}CK	3, 9

Micron Technology, Inc. reserves the right to change products or specifications without notice.
© 2017 Micron Technology, Inc. All rights reserved.

Table 105: Timing Between Commands (PRECHARGE and AUTO PRECHARGE): DQ ODT is Disable (Continued)

From Command	To Command	Minimum Delay Between "From Command" and "To Command"	Unit	Notes
MASK-WR w/AP BL = 16	PRECHARGE (to same bank as MASK-WR w/AP)	WL + BL/2 + *n*WR +1	^{t}CK	1, 11
	PRECHARGE ALL	WL + BL/2 + *n*WR + 1	^{t}CK	1, 11
	ACTIVATE (to same bank as MASK-WR w/AP)	WL + BL/2 + *n*WR + 1 + ^{t}RPpb	^{t}CK	1, 8, 11
	WRITE or WRITE w/AP (same bank)	Illegal	–	3
	MASK-WR or MASK-WR w/AP (same bank)	Illegal	–	3
	WRITE or WRITE w/AP (different bank)	BL/2	^{t}CK	3
	MASK-WR or MASK-WR w/AP (different bank)	BL/2	^{t}CK	3
	READ or READ w/AP (same bank)	Illegal	–	3
	READ or READ w/AP (different bank)	WL + BL/2 + ^{t}WTR + 1	^{t}CK	3, 9
PRECHARGE	PRECHARGE (to same bank as PRECHARGE)	4	^{t}CK	1
	PRECHARGE ALL	4	^{t}CK	1
PRECHARGE ALL	PRECHARGE	4	^{t}CK	1
	PRECHARGE ALL	4	^{t}CK	1

Notes:
1. For a given bank, the precharge period should be counted from the latest PRECHARGE command, whether per-bank or all-bank, issued to that bank. The precharge period is satisfied ^{t}RP after that latest PRECHARGE command.
2. Any command issued during the minimum delay time as specified in the table above is illegal.
3. After READ w/AP, seamless READ operations to different banks are supported. After WRITE w/AP or MASK-WR w/AP, seamless WRITE operations to different banks are supported. READ, WRITE, and MASK-WR operations may not be truncated or interrupted.
4. ^{t}RPST values depend on MR1 OP[7] respectively.
5. ^{t}WPRE values depend on MR1 OP[2] respectively.
6. Minimum delay between "from command" and "to command" in clock cycle is calculated by dividing ^{t}RTP (in ns) by ^{t}CK (in ns) and rounding up to the next integer: Minimum delay [cycles] = roundup(^{t}RTP [ns]/^{t}CK [ns]).
7. Minimum delay between "from command" and "to command" in clock cycle is calculated by dividing ^{t}WR (in ns) by ^{t}CK (in ns) and rounding up to the next integer: Minimum delay [cycles] = roundup(^{t}WR [ns]/^{t}CK [ns]).

Micron Technology, Inc. reserves the right to change products or specifications without notice.
© 2017 Micron Technology, Inc. All rights reserved.

8. Minimum delay between "from command" and "to command" in clock cycle is calculated by dividing ^{t}RPpb (in ns) by ^{t}CK (in ns) and rounding up to the next integer: Minimum delay [cycles] = roundup(^{t}RPpb [ns]/^{t}CK [ns]).
9. Minimum delay between "from command" and "to command" in clock cycle is calculated by dividing ^{t}WTR (in ns) by ^{t}CK (in ns) and rounding up to the next integer: Minimum delay [cycles] = roundup(^{t}WTR [ns]/^{t}CK [ns]).
10. For READ w/AP the value is *n*RTP, which is defined in mode register 2.
11. For WRITE w/AP the value is *n*WR, which is defined in mode register 1.

Table 106: Timing Between Commands (PRECHARGE and AUTO PRECHARGE): DQ ODT is Enable

From Command	To Command	Minimum Delay Between "From Command" and "To Command"	Unit	Notes
READ w/AP BL = 16	WRITE or WRITE w/AP (different bank)	RL + RU(^{t}DQSCK(MAX)/^{t}CK) + BL/2 + RD(^{t}RPST) - ODTLon - RD(^{t}ODTon(MIN)/^{t}CK) + 1	^{t}CK	2, 3
	MASK-WR or MASK-WR w/AP (different bank)	RL + RU(^{t}DQSCK(MAX)/^{t}CK) + BL/2 + RD(^{t}RPST) - ODTLon - RD(^{t}ODTon(MIN)/^{t}CK) + 1	^{t}CK	2, 3
READ w/AP BL = 32	WRITE or WRITE w/AP (different bank)	RL + RU(^{t}DQSCK(MAX)/^{t}CK) + BL/2 + RD(^{t}RPST) - ODTLon - RD(^{t}ODTon(MIN)/^{t}CK) + 1	^{t}CK	2, 3
	MASK-WR or MASK-WR w/AP (different bank)	RL + RU(^{t}DQSCK(MAX)/^{t}CK) + BL/2 + RD(^{t}RPST) - ODTLon - RD(^{t}ODTon(MIN)/^{t}CK) + 1	^{t}CK	2, 3

Notes:
1. The rest of the timing about PRECHARGE and AUTO PRECHARGE is same as DQ ODT is disable case.
2. After READ w/AP, seamless read operations to different banks are supported. READ, WRITE, and MASK-WR operations may not be truncated or interrupted.
3. ^{t}RPST values depend on MR1 OP[7] respectively.

RAS Lock Function

READ with AUTO PRECHARGE or WRITE/MASK WRITE with AUTO PRECHARGE commands may be issued after ^{t}RCD has been satisfied. The LPDDR4 SDRAM RAS lockout feature will schedule the internal precharge to assure that ^{t}RAS is satisfied. ^{t}RC needs to be satisfied prior to issuing subsequent ACTIVATE commands to the same bank.

The figure below shows example of RAS lock function.

Micron Technology, Inc. reserves the right to change products or specifications without notice.
© 2017 Micron Technology, Inc. All rights reserved.

Figure 67: Command Input Timing with RAS Lock

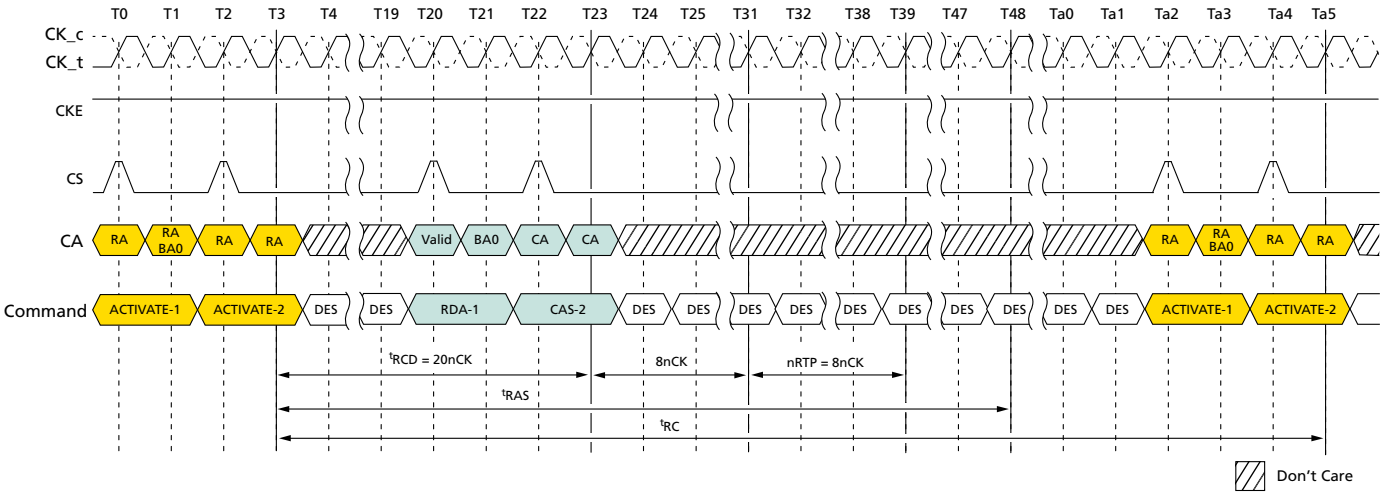

Notes: 1. ^{t}CK (AVG) = 0.938ns, Data rate = 2133 Mb/s, ^{t}RCD(MIN) = MAX(18ns, 4*n*CK), ^{t}RAS(MIN) = MAX(42ns, 3*n*CK), *n*RTP = 8*n*CK, BL = 32.

2. ^{t}RCD = 20*n*CK comes from roundup(18ns/0.938ns).
3. DES commands are shown for ease of illustration; other commands may be valid at these times.

Delay Time From WRITE-to-READ with Auto Precharge

In the case of WRITE command followed by READ with AUTO PRECHARGE, controller must satisfy ^{t}WR for the WRITE command before initiating the device internal auto-precharge. It means that (^{t}WTR + *n*RTP) should be equal or longer than (^{t}WR) when BL setting is 16, as well as (^{t}WTR + *n*RTP + 8*n*CK) should be equal or longer than (^{t}WR) when BL setting is 32. Refer to the following figure for details.

Figure 68: Delay Time From WRITE-to-READ with Auto Precharge

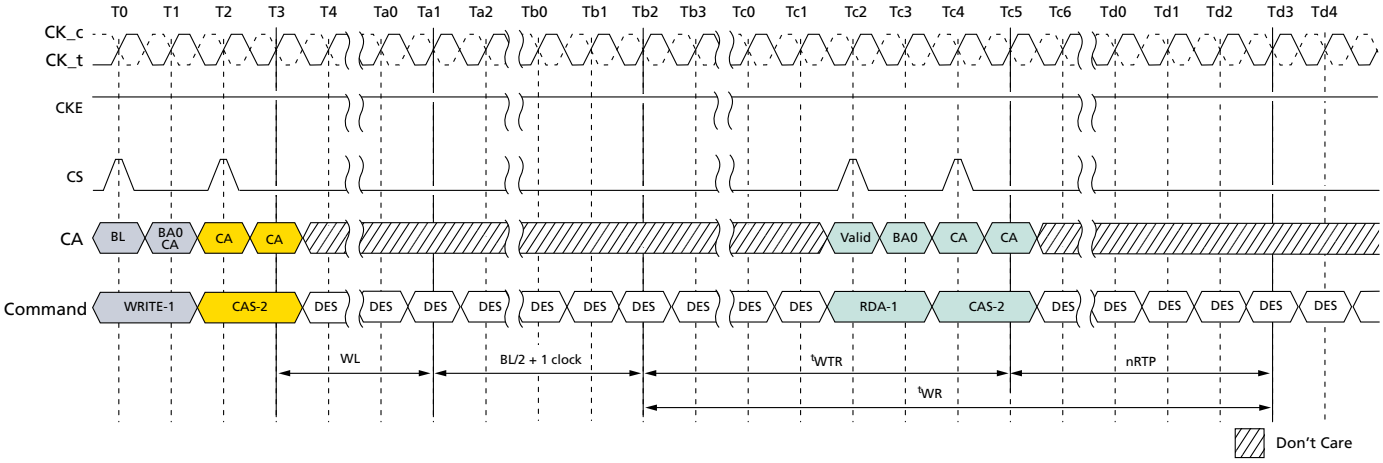

Notes: 1. Burst length at read = 16.

Micron Technology, Inc. reserves the right to change products or specifications without notice.
© 2017 Micron Technology, Inc. All rights reserved.

2. DES commands are shown for ease of illustration; other commands may be valid at these times.

REFRESH Command

The REFRESH command is initiated with CS HIGH, CA0 LOW, CA1 LOW, CA2 LOW, CA3 HIGH and CA4 LOW at the first rising edge of clock. Per bank REFRESH is initiated with CA5 LOW at the first rising edge of the clock. The all-bank REFRESH is initiated with CA5 HIGH at the first rising edge of clock.

A per bank REFRESH command (REFpb) is performed to the bank address as transferred on CA0, CA1, and CA2 on the second rising edge of the clock. Bank address BA0 is transferred on CA0, bank address BA1 is transferred on CA1, and bank address BA2 is transferred on CA2. A per bank REFRESH command (REFpb) to the eight banks can be issued in any order. For example, REFpb commands may be issued in the following order: 1-3-0-2-4-7-5-6. After the eight banks have been refreshed using the per bank REFRESH command, the controller can send another set of per bank REFRESH commands in the same order or a different order. One possible order can be a sequential round robin: 0-1-2-3-4-5-6-7. It is illegal to send a per bank REFRESH command to the same bank unless all eight banks have been refreshed using the per bank REFRESH command. The count of eight REFpb commands starts with the first REFpb command after a synchronization event.

The bank count is synchronized between the controller and the device by resetting the bank count to zero. Synchronization can occur upon reset procedure or at every exit from self refresh. The REFab command also synchronizes the counter between the controller and the device to zero. The device can be placed in self refresh, or a REFab command can be issued at any time without cycling through all eight banks using per bank REFRESH command. After the bank count is synchronized to zero, the controller can issue per bank REFRESH commands in any order, as described above.

A REFab command issued when the bank counter is not zero will reset the bank counter to zero and the device will perform refreshes to all banks as indicated by the row counter. If another REFRESH command (REFab or REFpb) is issued after the REFab command then it uses an incremented value of the row counter.

The table below shows examples of both bank and refresh counter increment behavior.

Table 107: Bank and Refresh Counter Increment Behavior

#	Command	BA2	BA1	BA0	Refresh Bank #	Bank Counter #	Ref. Conter # (Row Address #)
0	Reset, SRX, or REFab					To 0	–
1	REFpb	0	0	0	0	0 to 1	n
2	REFpb	0	0	1	1	1 to 2	
3	REFpb	0	1	0	2	2 to 3	
4	REFpb	0	1	1	3	3 to 4	
5	REFpb	1	0	0	4	4 to 5	
6	REFpb	1	0	1	5	5 to 6	
7	REFpb	1	1	0	6	6 to 7	
8	REFpb	1	1	1	7	7 to 0	

Micron Technology, Inc. reserves the right to change products or specifications without notice.
© 2017 Micron Technology, Inc. All rights reserved.

Table 107: Bank and Refresh Counter Increment Behavior (Continued)

#	Command	BA2	BA1	BA0	Refresh Bank #	Bank Counter #	Ref. Conter # (Row Address #)
9	REFpb	1	1	0	6	0 to 1	n + 1
10	REFpb	1	1	1	7	1 to 2	
11	REFpb	0	0	1	1	2 to 3	
12	REFpb	0	1	1	3	3 to 4	
13	REFpb	1	0	1	5	4 to 5	
14	REFpb	0	1	0	2	5 to 6	
15	REFpb	0	0	0	0	6 to 7	
16	REFpb	1	0	0	4	7 to 0	
17	REFpb	0	0	0	0	0 to 1	n + 2
18	REFpb	0	0	1	1	1 to 2	
19	REFpb	0	1	0	2	2 to 3	
20	***REFab***	***V***	***V***	***V***	***0 to 7***	***To 0***	***n + 2***
21	REFpb	1	1	0	6	0 to 1	n + 3
22	REFpb	1	1	1	7	1 to 2	
Snip							

A bank must be idle before it can be refreshed. The controller must track the bank being refreshed by the per bank REFRESH command.

The REFpb command must not be issued to the device until the following conditions have been met:

- ^{t}RFCab has been satisfied after the prior REFab command
- ^{t}RFCpb has been satisfied after the prior REFpb command
- ^{t}RP has been satisfied after the prior PRECHARGE command to that bank
- ^{t}RRD has been satisfied after the prior ACTIVATE command (for example, after activating a row in a different bank than the one affected by the REFpb command)

The target bank is inaccessible during per bank REFRESH cycle time (^{t}RFCpb). However, other banks within the device are accessible and can be addressed during the cycle. During the REFpb operation, any of the banks other than the one being refreshed can be maintained in an active state or accessed by a READ or a WRITE command. When the per bank REFRESH cycle has completed, the affected bank will be in the idle state.

After issuing REFpb, the following conditions must be met:

- ^{t}RFCpb must be satisfied before issuing a REFab command
- ^{t}RFCpb must be satisfied before issuing an ACTIVATE command to the same bank
- ^{t}RRD must be satisfied before issuing an ACTIVATE command to a different bank
- ^{t}RFCpb must be satisfied before issuing another REFpb command

An all-bank REFRESH command (REFab) issues a REFRESH command to every bank in a channel. All banks must be idle when REFab is issued (for example, by issuing a PRECHARGE ALL command prior to issuing an all-bank REFRESH command). The REFab

Micron Technology, Inc. reserves the right to change products or specifications without notice.
© 2017 Micron Technology, Inc. All rights reserved.

command must not be issued to the device until the following conditions have been met:

- ^{t}RFCab has been satisfied following the prior REFab command
- ^{t}RFCpb has been satisfied following the prior REFpb command
- ^{t}RP has been satisfied following the prior PRECHARGE command

When an all-bank REFRESH cycle has completed, all banks will be idle. After issuing REFab:

- RFCab latency must be satisfied before issuing an ACTIVATE command,
- RFCab latency must be satisfied before issuing a REFab or REFpb command

Table 108: REFRESH Command Timing Constraints

Symbol	Minimum Delay From...	To	Notes
^{t}RFCab	REFab	REFab	
		ACTIVATE command to any bank	
		REFpb	
^{t}RFCpb	REFpb	REFab	
		ACTIVATE command to same bank as REFpb	
		REFpb	
^{t}RRD	REFpb	ACTIVATE command to a different bank than REFpb	
	ACTIVATE	REFpb	1
		ACTIVATE command to a different bank than the prior ACTIVATE command	

Note: 1. A bank must be in the idle state before it is refreshed; therefore, REFab is prohibited following an ACTIVATE command. REFpb is supported only if it affects a bank that is in the idle state.

Figure 69: All-Bank REFRESH Operation

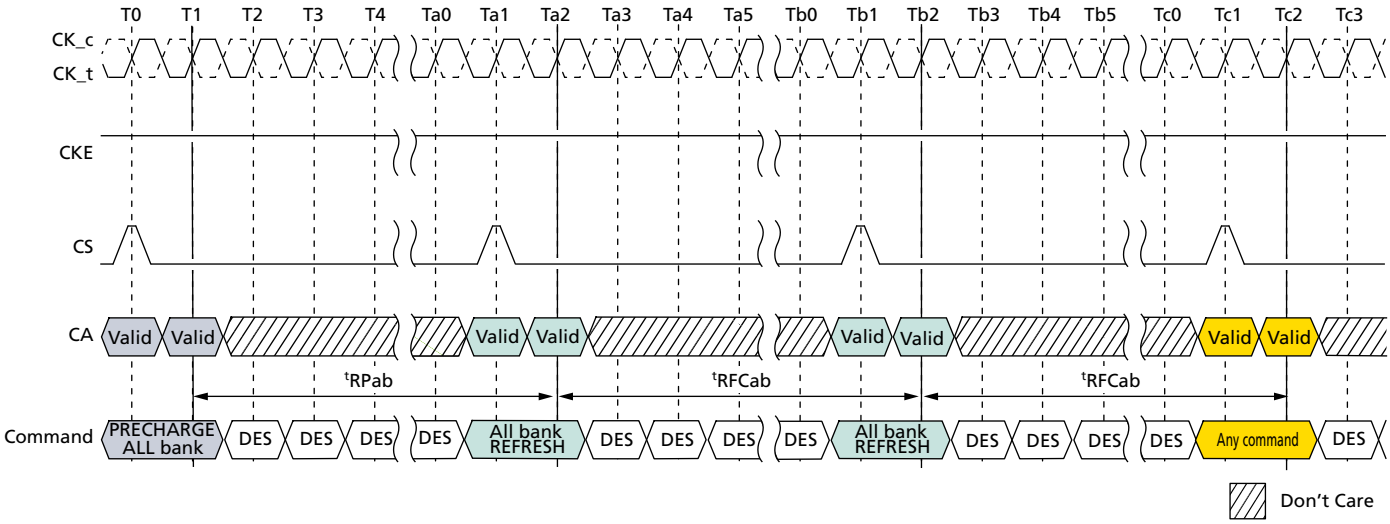

Micron Technology, Inc. reserves the right to change products or specifications without notice.
© 2017 Micron Technology, Inc. All rights reserved.

Figure 70: Per Bank REFRESH Operation

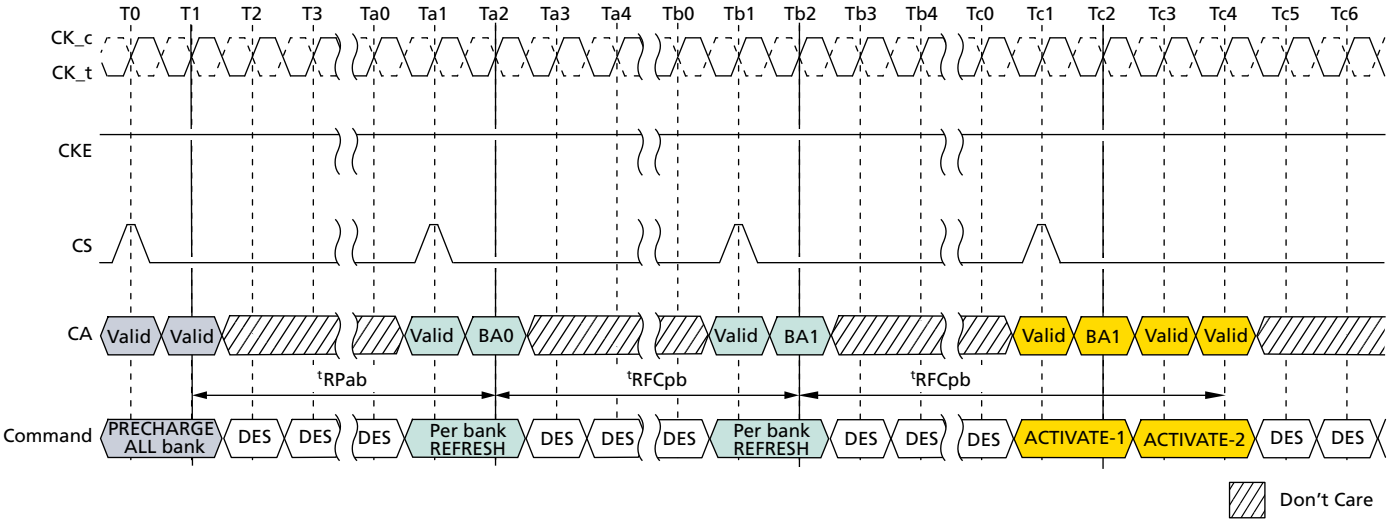

Notes: 1. In the beginning of this example, the REFpb bank is pointing to bank 0.
2. Operations to banks other than the bank being refreshed are supported during the ^{t}RFCpb period.

In general, a REFRESH command needs to be issued to the device regularly every ^{t}REFI interval. To allow for improved efficiency in scheduling and switching between tasks, some flexibility in the absolute refresh interval is provided. A maximum of eight REFRESH commands can be postponed during operation of the device, but at no point in time are more than a total of eight REFRESH commands allowed to be postponed. And a maximum number of pulled-in or postponed REF command is dependent on refresh rate. It is described in the table below. In the case where eight REFRESH commands are postponed in a row, the resulting maximum interval between the surrounding REFRESH commands is limited to 9 × ^{t}REFI. A maximum of eight additional REFRESH commands can be issued in advance (pulled in), with each one reducing the number of regular REFRESH commands required later by one. Note that pulling in more than eight REFRESH commands in advance does not reduce the number of regular REFRESH commands required later; therefore, the resulting maximum interval between two surrounding REFRESH commands is limited to 9 × ^{t}REFI. At any given time, a maximum of 16 REFRESH commands can be issued within 2 × ^{t}REFI.

Self refresh mode may be entered with a maximum of eight REFRESH commands being postponed. After exiting self refresh mode with one or more REFRESH commands postponed, additional REFRESH commands may be postponed to the extent that the total number of postponed REFRESH commands (before and after self refresh) will never exceed eight. During self refresh mode, the number of postponed or pulled-in REFRESH commands does not change.

And for per bank refresh, a maximum of 8 x 8 per bank REFRESH commands can be postponed or pulled in for scheduling efficiency. At any given time, a maximum of 2 x 8 x 8 per bank REFRESH commands can be issued within 2 × ^{t}REFI.

Micron Technology, Inc. reserves the right to change products or specifications without notice.
© 2017 Micron Technology, Inc. All rights reserved.

Table 109: Legacy REFRESH Command Timing Constraints

MR4 OP[2:0]	Refresh rate	Max. No. of pulled-in or postponed REFab	Max. Interval between two REFab	Max. No. of REFab[1]	Per-bank REFRESH
000b	Low temp. limit	N/A	N/A	N/A	N/A
001b	4 × ^{t}REFI	8	9 × 4 × ^{t}REFI	16	1/8 of REFab
010b	2 × ^{t}REFI	8	9 × 2 × ^{t}REFI	16	1/8 of REFab
011b	1 × ^{t}REFI	8	9 × ^{t}REFI	16	1/8 of REFab
100b	0.5 × ^{t}REFI	8	9 × 0.5 × ^{t}REFI	16	1/8 of REFab
101b	0.25 × ^{t}REFI	8	9 × 0.25 × ^{t}REFI	16	1/8 of REFab
110b	0.25 × ^{t}REFI	8	9 × 0.25 × ^{t}REFI	16	1/8 of REFab
111b	High temp. limit	N/A	N/A	N/A	N/A

Note: 1. Maximum number of REFab within MAX(2 × ^{t}REFI × refresh rate multiplier, 16 × ^{t}RFC).

Table 110: Modified REFRESH Command Timing Constraints

MR4 OP[2:0]	Refresh Rate	Max. No. of Pulled-in or Postponed REFab	Max. Interval between Two REFab	Max. No. of REFab[1]	Per-bank REFRESH
000B	Low temp. limit	N/A	N/A	N/A	N/A
001B	4 × ^{t}REFI	2	3 × 4 × ^{t}REFI	4	1/8 of REFab
010B	2 × ^{t}REFI	4	5 × 2 × ^{t}REFI	8	1/8 of REFab
011B	1 × ^{t}REFI	8	9 × ^{t}REFI	16	1/8 of REFab
100B	0.5 × ^{t}REFI	8	9 × 0.5 × ^{t}REFI	16	1/8 of REFab
101B	0.25 × ^{t}REFI	8	9 × 0.25 × ^{t}REFI	16	1/8 of REFab
110B	0.25 × ^{t}REFI	8	9 × 0.25 × ^{t}REFI	16	1/8 of REFab
111B	High temp. limit	N/A	N/A	N/A	N/A

Notes:
1. For any thermal transition phase where refresh mode is transitioned to either 2 × ^{t}REFI or 4 × ^{t}REFI, LPDDR4 devices will support the previous postponed refresh requirement provided the number of postponed refreshes is monotonically reduced to meet the new requirement. However, the pulled-in REFRESH commands in the previous thermal phase are not applied in the new thermal phase. Entering a new thermal phase, the controller must count the number of pulled-in REFRESH commands as zero, regardless of the number of remaining pulled-in REFRESH commands in the previous thermal phase.
2. LPDDR4 devices are refreshed properly if the memory controller issues REFRESH commands with same or shorter refresh period than reported by MR4 OP[2:0]. If a shorter refresh period is applied, the corresponding requirements from this table apply. For example, when MR4 OP[2:0] = 001b, the controller can be in any refresh rate from 4 × ^{t}REFI to 0.25 × ^{t}REFI. When MR4 OP[2:0] = 010b, the only prohibited refresh rate is 4 × ^{t}REFI.

Micron Technology, Inc. reserves the right to change products or specifications without notice.
© 2017 Micron Technology, Inc. All rights reserved.

Figure 71: Postponing REFRESH Commands (Example)

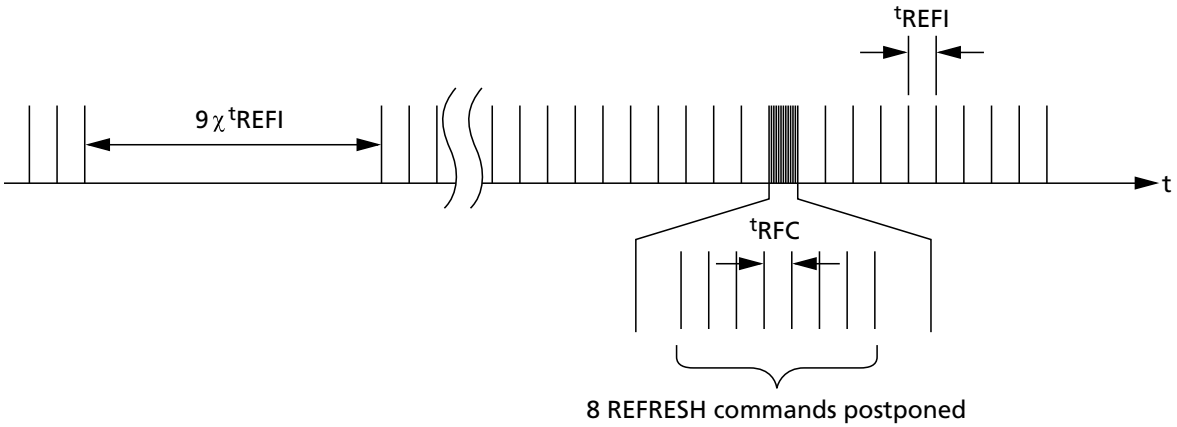

Figure 72: Pulling in REFRESH Commands (Example)

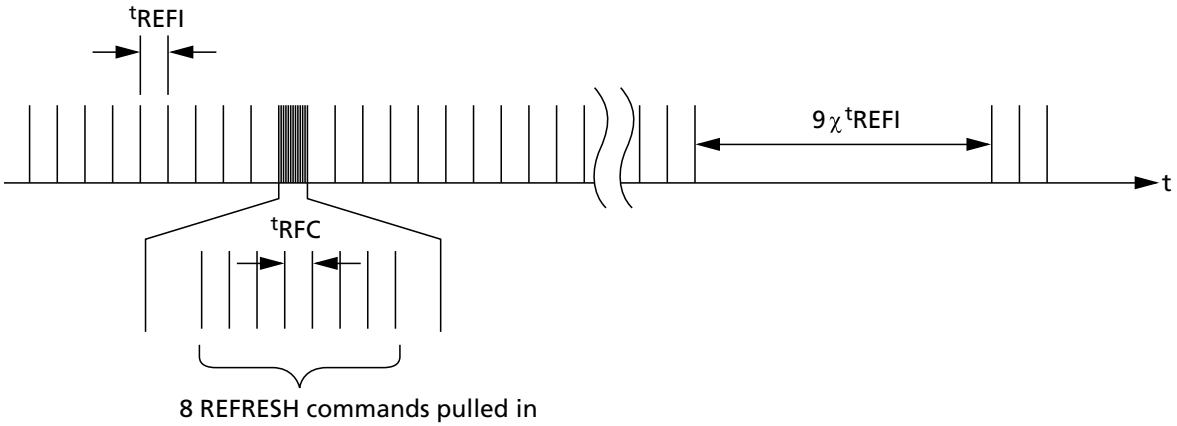

Micron Technology, Inc. reserves the right to change products or specifications without notice.
© 2017 Micron Technology, Inc. All rights reserved.

Burst READ Operation Followed by Per Bank Refresh

Figure 73: Burst READ Operation Followed by Per Bank Refresh

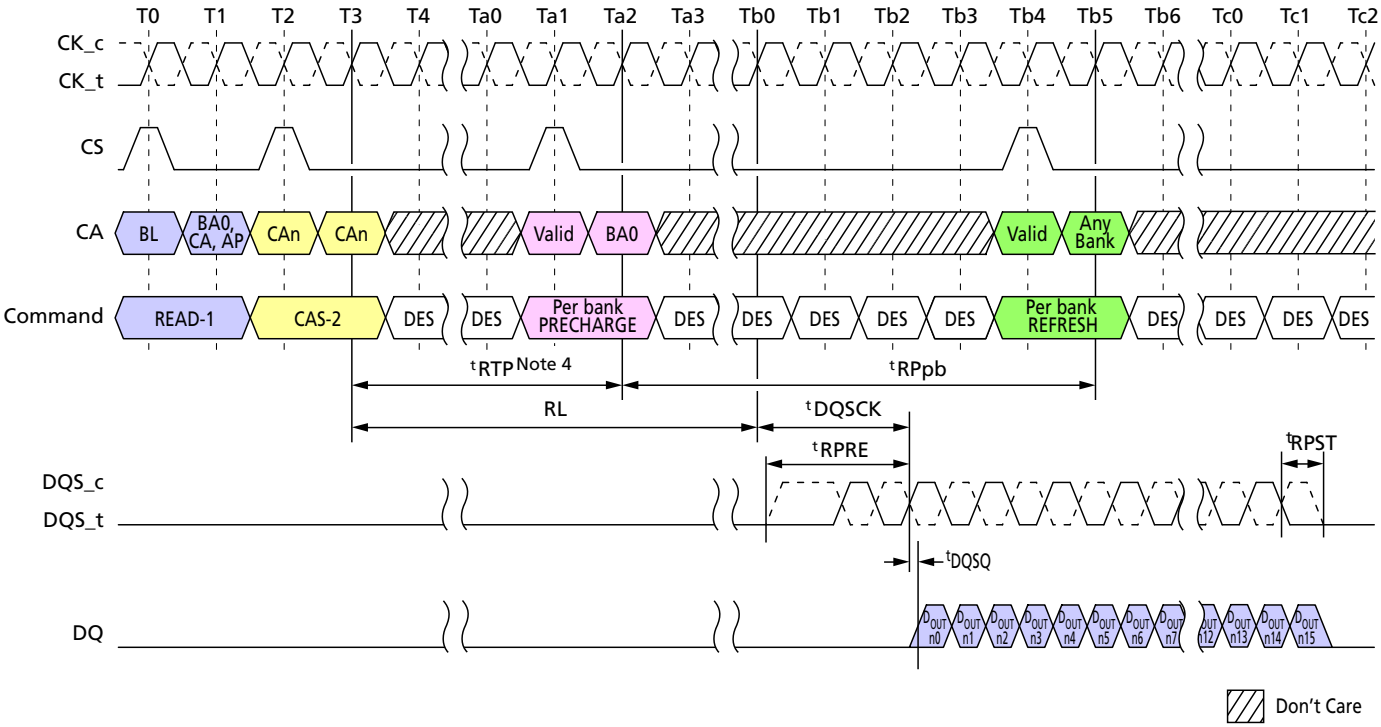

Notes:
1. The per bank REFRESH command can be issued after ^{t}RTP + ^{t}RPpb from READ command.
2. BL = 16; Preamble = Toggle; Postamble = 0.5*n*CK; DQ/DQS: V_{SSQ} termination.
3. D_{OUT} *n* = data-out from column *n*.
4. In the case of BL = 32, delay time from read to per bank precharge is 8*n*CK + ^{t}RTP.
5. DES commands are shown for ease of illustration; other commands may be valid at these times.

Micron Technology, Inc. reserves the right to change products or specifications without notice.
© 2017 Micron Technology, Inc. All rights reserved.

Figure 74: Burst READ With AUTO PRECHARGE Operation Followed by Per Bank Refresh

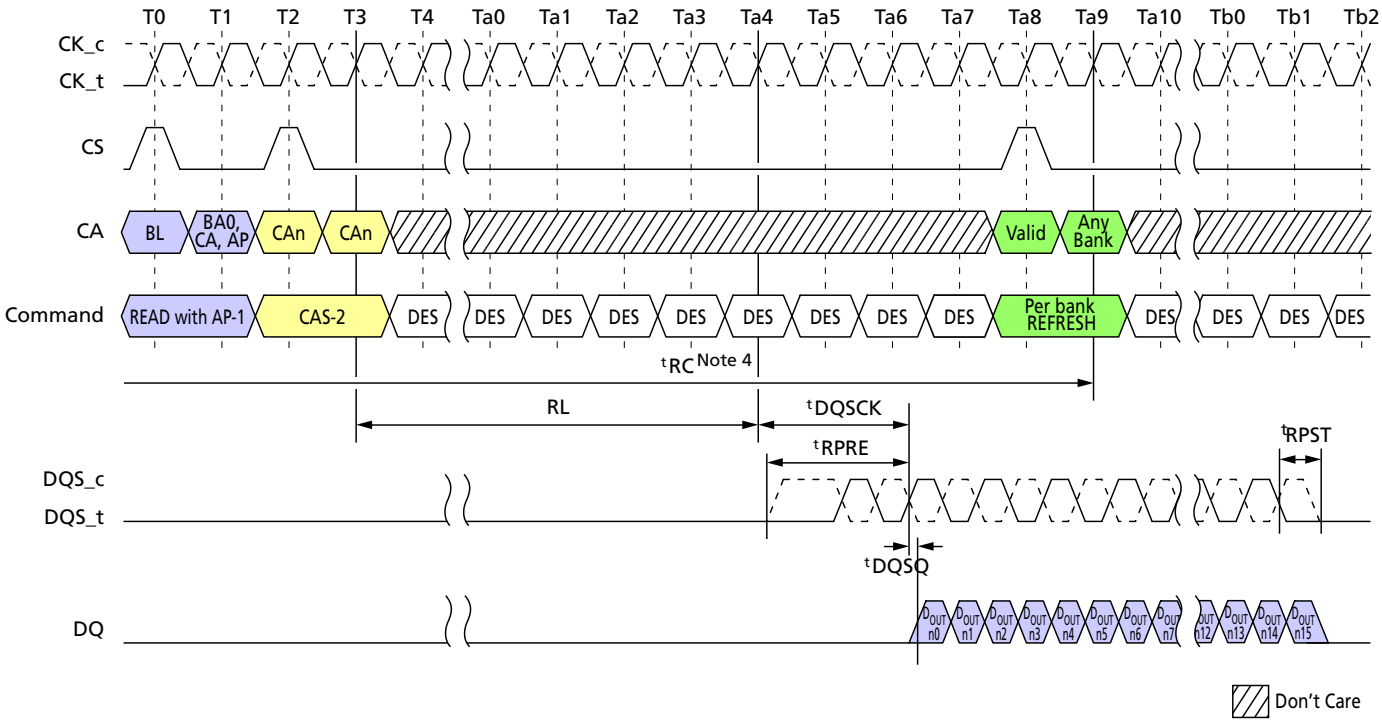

Notes:
1. BL = 16; Preamble = Toggle; Postamble = 0.5*n*CK; DQ/DQS: V_{SSQ} termination.
2. D_{OUT} *n* = data-out from column *n*.
3. DES commands are shown for ease of illustration; other commands may be valid at these times.
4. ^{t}RC needs to be satisfied prior to issuing a subsequent per bank REFRESH command.

Refresh Requirement

Between the SRX command and SRE command, at least one extra REFRESH command is required. After the SELF REFRESH EXIT command, in addition to the normal REFRESH command at ^{t}REFI interval, the device requires a minimum of one extra REFRESH command prior to the SELF REFRESH ENTRY command.

Table 111: Refresh Requirement Parameters

Parameter		Symbol	Density (per channel)							Unit
			2Gb	3Gb	4Gb	6Gb	8Gb	12Gb	16Gb	
Number of banks per channel		–	8							–
Refresh window (^{t}REFW): (1 × Refresh)[3]		^{t}REFW	32							ms
Required number of REFRESH commands in ^{t}REFW window		R	8192							–
Average refresh interval (1 × Refresh)[3]	REFab	^{t}REFI	3.904							µs
	REFpb	^{t}REFIpb	488							ns

Micron Technology, Inc. reserves the right to change products or specifications without notice.
© 2017 Micron Technology, Inc. All rights reserved.

Table 111: Refresh Requirement Parameters (Continued)

Parameter	Symbol	Density (per channel)							Unit
		2Gb	3Gb	4Gb	6Gb	8Gb	12Gb	16Gb	
REFRESH cycle time (all banks)	^{t}RFCab	130	180		280		380		ns
REFRESH cycle time (per bank)	^{t}RFCpb	60	90		140		190		ns
Per bank refresh to per bank refresh time (different bank)	^{t}PBR2PBR	60	90		90		90		ns

Notes:
1. Refresh for each channel is independent of the other channel on the die, or other channels in a package. Power delivery in the user's system should be verified to make sure the DC operating conditions are maintained when multiple channels are refreshed simultaneously.
2. Self refresh abort feature is available for higher density devices starting with 6Gb density per channel device and ^{t}XSR_abort(MIN) is defined as ^{t}RFCpb + 17.5ns.
3. Refer to MR4 OP[2:0] for detailed refresh rate and its multipliers.

SELF REFRESH Operation

Self Refresh Entry and Exit

The SELF REFRESH command can be used to retain data in the device without external REFRESH commands. The device has a built-in timer to accommodate SELF REFRESH operation. Self refresh is entered by the SELF REFRESH ENTRY command defined by having CS HIGH, CA0 LOW, CA1 LOW, CA2 LOW, CA3 HIGH, CA4 HIGH, and CA5 valid (valid meaning that it is at a logic level HIGH or LOW) for the first rising edge, and CS LOW, CA0 valid, CA1 valid, CA2 valid, CA3 valid, CA4 valid, and CA5 valid at the second rising edge of clock. The SELF REFRESH command is only allowed when READ DATA burst is completed and the device is in the idle state.

During self refresh mode, external clock input is needed and all input pins of the device are activated. The device can accept the following commands: MRR-1, CAS-2, DES, SRX, MPC, MRW-1, and MRW-2, except PASR bank/segment mask setting and SR abort setting.

The device can operate in self refresh mode within the standard and elevated temperature ranges. It also manages self refresh power consumption when the operating temperature changes: lower at low temperatures and higher at high temperatures.

For proper SELF REFRESH operation, power supply pins (V_{DD1}, V_{DD2}, and V_{DDQ}) must be at valid levels. V_{DDQ} can be turned off during self refresh with power-down after ^{t}CKELCK is satisfied. (Refer to the Self Refresh Entry/Exit Timing with Power-Down Entry/Exit figure.) Prior to exiting self refresh with power-down, V_{DDQ} must be within specified limits. The minimum time that the device must remain in self refresh mode is ^{t}SR(MIN). After self refresh exit is registered, only MRR-1, CAS-2, DES, MPC, MRW-1, and MRW-2 except PASR bank/segment mask setting and SR abort setting are allowed until ^{t}XSR is satisfied.

The use of self refresh mode introduces the possibility that an internally timed refresh event can be missed when self refresh exit is registered. Upon exit from self refresh, it is required that at least one REFRESH command (8 per-bank or 1 all-bank) is issued before entry into a subsequent self refresh. This REFRESH command is not included in the

Micron Technology, Inc. reserves the right to change products or specifications without notice.
© 2017 Micron Technology, Inc. All rights reserved.

count of regular REFRESH commands required by the ^{t}REFI interval, and does not modify the postponed or pulled-in refresh counts; the REFRESH command does count toward the maximum refreshes permitted within 2 × ^{t}REFI.

Figure 75: Self Refresh Entry/Exit Timing

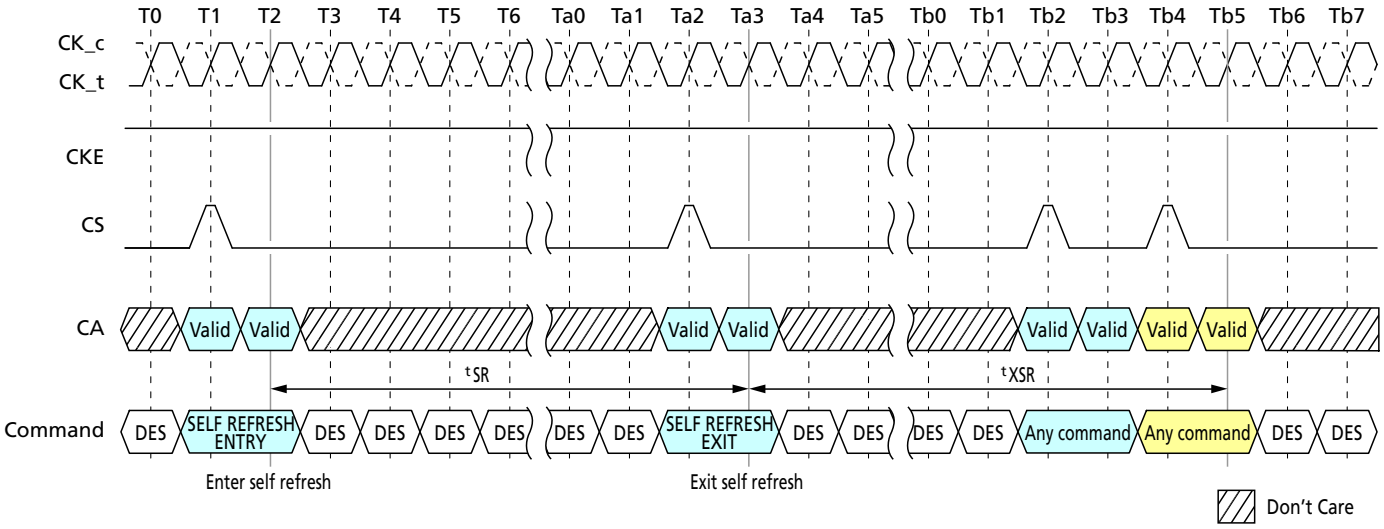

Notes:
1. MRR-1, CAS-2, DES, SRX, MPC, MRW-1, and MRW-2 commands (except PASR bank/segment mask setting and SR abort setting) are allowed during self refresh.
2. DES commands are shown for ease of illustration; other commands may be valid at these times.

Power-Down Entry and Exit During Self Refresh

Entering/exiting power-down mode is allowed during self refresh mode. The related timing parameters between self refresh entry/exit and power-down entry/exit are shown below.

Micron Technology, Inc. reserves the right to change products or specifications without notice.
© 2017 Micron Technology, Inc. All rights reserved.

Figure 76: Self Refresh Entry/Exit Timing with Power-Down Entry/Exit

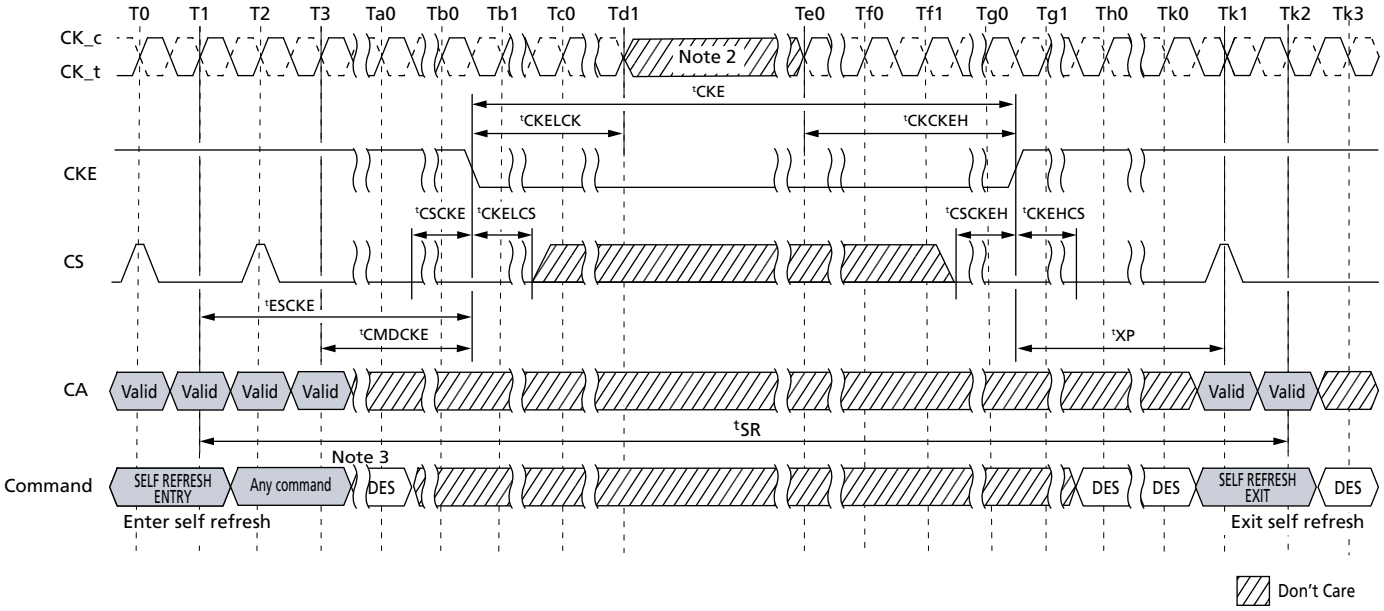

Notes:
1. MRR-1, CAS-2, DES, SRX, MPC, MRW-1, and MRW-2 commands (except PASR bank/segment mask setting and SR abort setting) are allowed during self refresh.
2. Input clock frequency can be changed, or the input clock can be stopped, or floated after ^{t}CKELCK satisfied and during power-down, provided that upon exiting power-down, the clock is stable and within specified limits for a minimum of ^{t}CKCKEH of stable clock prior to power-down exit and the clock frequency is between the minimum and maximum specified frequency for the speed grade in use.
3. Two clock command for example.

Command Input Timing After Power-Down Exit

Command input timings after power-down exit during self refresh mode are shown below.

Micron Technology, Inc. reserves the right to change products or specifications without notice.
© 2017 Micron Technology, Inc. All rights reserved.

Figure 77: Command Input Timings after Power-Down Exit During Self Refresh

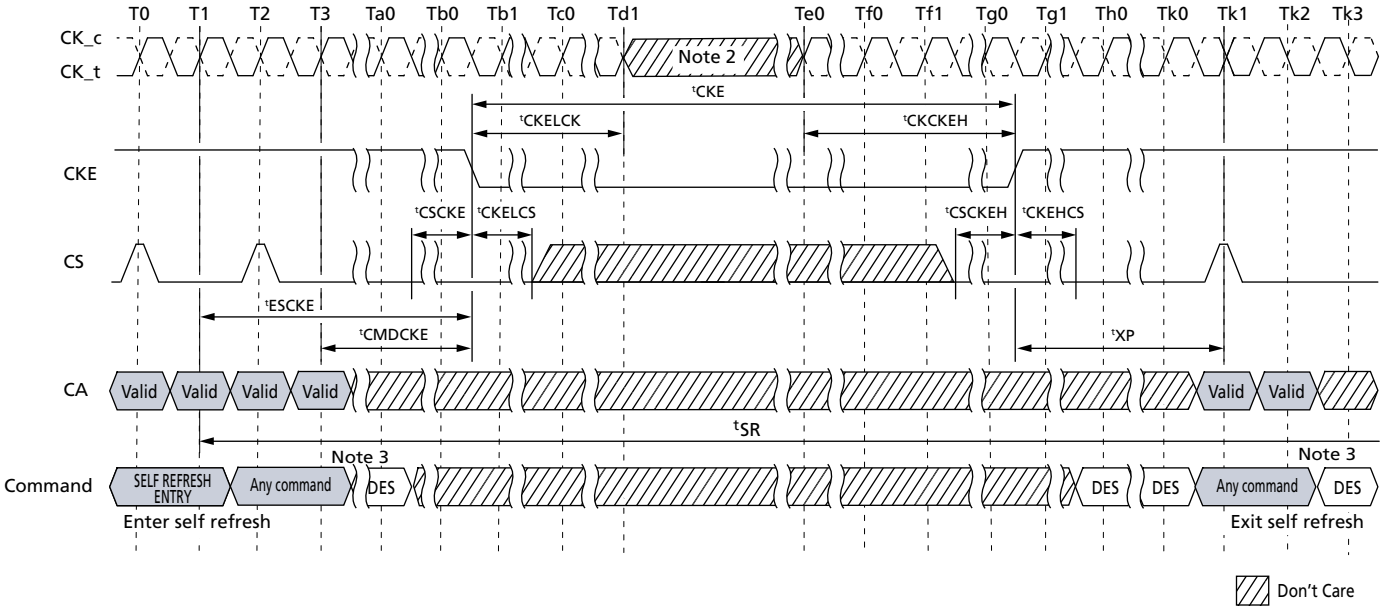

Notes:
1. MRR-1, CAS-2, DES, SRX, MPC, MRW-1, and MRW-2 commands (except PASR bank/segment setting) are allowed during self refresh.
2. Input clock frequency can be changed or the input clock can be stopped or floated after ^{t}CKELCK satisfied and during power-down, provided that upon exiting power-down, the clock is stable and within specified limits for a minimum of ^{t}CKCKEH of stable clock prior to power-down exit and the clock frequency is between the minimum and maximum specified frequency for the speed grade in use.
3. Two clock command for example.

Self Refresh Abort

If MR4 OP[3] is enabled, the device aborts any ongoing refresh during self refresh exit and does not increment the internal refresh counter. The controller can issue a valid command after a delay of ^{t}XSR_abort instead of ^{t}XSR.

The value of ^{t}XSR_abort(MIN) is defined as ^{t}RFCpb + 17.5ns.

Upon exit from self refresh mode, the device requires a minimum of one extra refresh (eight per bank or one for the entire bank) before entering a subsequent self refresh mode. This requirement remains the same irrespective of the setting of the MR bit for self refresh abort.

Self refresh abort feature is valid for 6Gb density per channel and larger densities only.

MRR, MRW, MPC Commands During ^{t}XSR, ^{t}RFC

MODE REGISTER READ (MRR), MULTI PURPOSE (MPC), and MODE REGISTER WRITE (MRW) command except PASR bank/segment mask setting and SR abort setting can be issued during ^{t}XSR period.

Micron Technology, Inc. reserves the right to change products or specifications without notice.
© 2017 Micron Technology, Inc. All rights reserved.

Figure 78: MRR, MRW, and MPC Commands Issuing Timing During ^{t}XSR

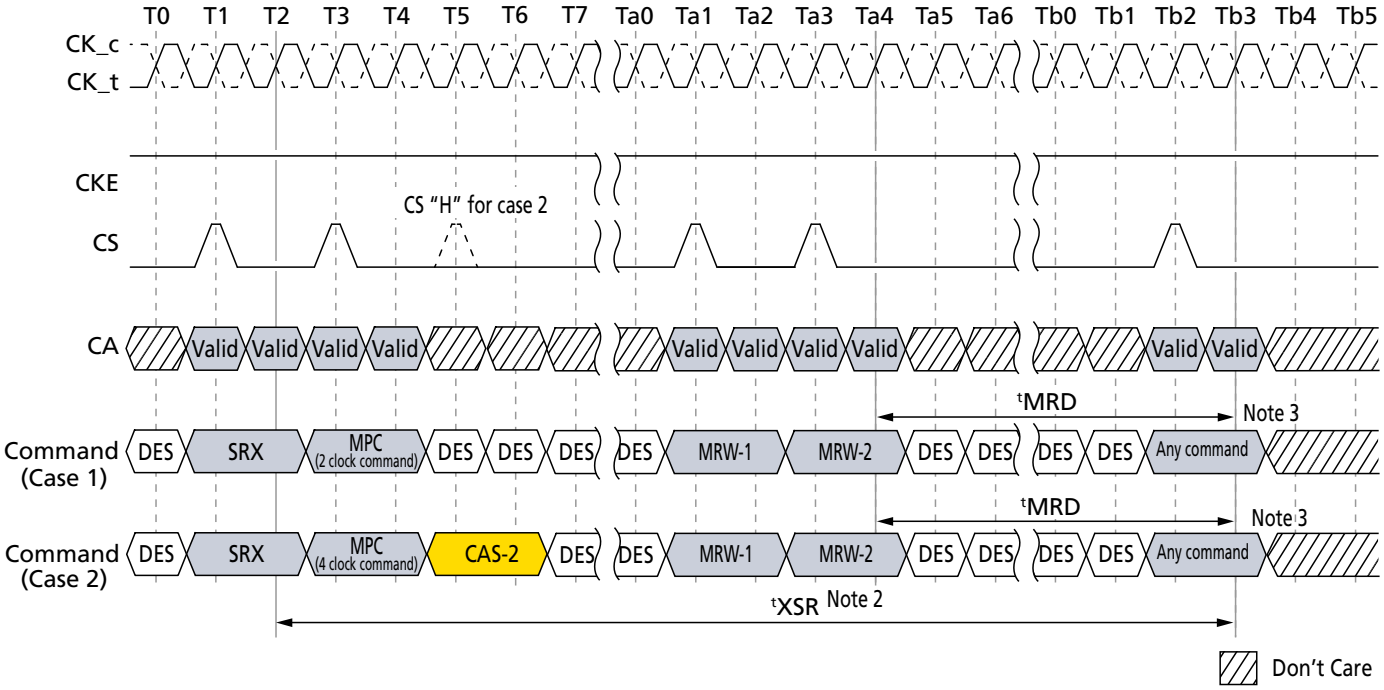

Notes: 1. MPC and MRW commands are shown. Any combination of MRR, MRW, and MPC is allowed during ^{t}XSR period.

2. "Any command" includes MRR, MRW, and all MPC commands.

MRR, MRW, and MPC can be issued during ^{t}RFC period.

Micron Technology, Inc. reserves the right to change products or specifications without notice.
© 2017 Micron Technology, Inc. All rights reserved.

Figure 79: MRR, MRW, and MPC Commands Issuing Timing During ^{t}RFC

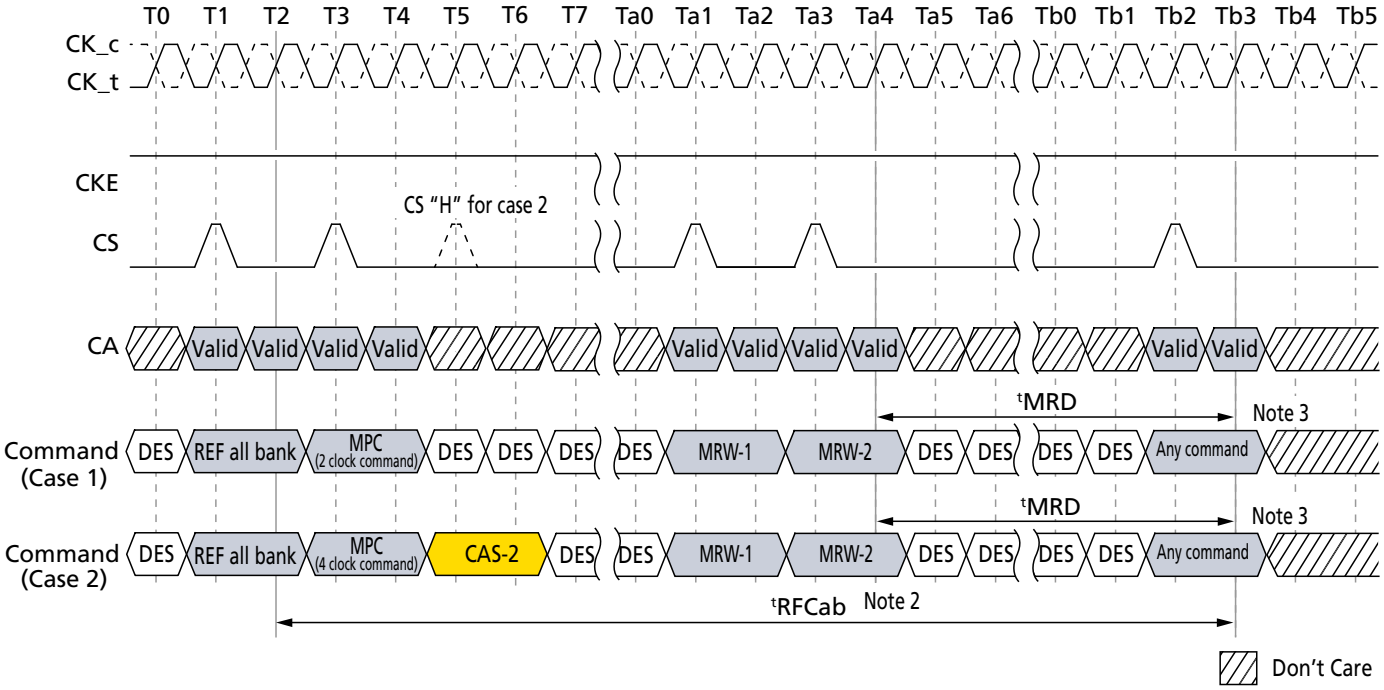

Notes:
1. MPC and MRW commands are shown. Any combination of MRR, MRW, and MPC is allowed during ^{t}RFCab or ^{t}RFCpb period.
2. REFRESH cycle time depends on REFRESH command. In the case of per bank REFRESH command issued, REFRESH cycle time will be ^{t}RFCpb.
3. "Any command" includes MRR, MRW, and all MPC commands.

Micron Technology, Inc. reserves the right to change products or specifications without notice.
© 2017 Micron Technology, Inc. All rights reserved.

Power-Down Mode

Power-Down Entry and Exit

Power-down is asynchronously entered when CKE is driven LOW. CKE must not go LOW while the following operations are in progress:

- Mode register read
- Mode register write
- Read
- Write
- $V_{REF(CA)}$ range and value setting via MRW
- $V_{REF(DQ)}$ range and value setting via MRW
- Command bus training mode entering/exiting via MRW
- VRCG HIGH current mode entering/exiting via MRW

CKE can go LOW while any other operations such as row activation, precharge, auto precharge, or refresh are in progress. The power-down I_{DD} specification will not be applied until such operations are complete. Power-down entry and exit are shown below.

Entering power-down deactivates the input and output buffers, excluding CKE and RESET_n. To ensure that there is enough time to account for internal delay on the CKE signal path, CS input is required stable LOW level and CA input level is "Don't Care" after CKE is driven LOW, this timing period is defined as ^{t}CKELCS. Clock input is required after CKE is driven LOW, this timing period is defined as ^{t}CKELCK. CKE LOW will result in deactivation of all input receivers except RESET_n after ^{t}CKELCK has expired. In power-down mode, CKE must be held LOW; all other input signals except RESET_n are "Don't Care." CKE LOW must be maintained until ^{t}CKE(MIN) is satisfied.

V_{DDQ} can be turned off during power-down after ^{t}CKELCK is satisfied. Prior to exiting power-down, V_{DDQ} must be within its minimum/maximum operating range. No REFRESH operations are performed in power-down mode except self refresh power-down. The maximum duration in non-self-refresh power-down mode is only limited by the refresh requirements outlined in the REFRESH command section.

The power-down state is asynchronously exited when CKE is driven HIGH. CKE HIGH must be maintained until ^{t}CKE(MIN) is satisfied. A valid, executable command can be applied with power-down exit latency ^{t}XP after CKE goes HIGH. Power-down exit latency is defined in the AC timing parameter table.

Clock frequency change or clock stop is inhibited during ^{t}CMDCKE, ^{t}CKELCK, ^{t}CKCKEH, ^{t}XP, ^{t}MRWCKEL, and ^{t}ZQCKE periods.

If power-down occurs when all banks are idle, this mode is referred to as idle power-down. if power-down occurs when there is a row active in any bank, this mode is referred to as active power-down. And If power-down occurs when self refresh is in progress, this mode is referred to as self refresh power-down in which the internal refresh is continuing in the same way as self refresh mode.

When CA, CK, and/or CS ODT is enabled via MR11 OP[6:4] and also via MR22 or CA-ODT pad setting, the rank providing ODT will continue to terminate the command bus in all DRAM states including power-down when V_{DDQ} is stable and within its minimum/maximum operating range.

Micron Technology, Inc. reserves the right to change products or specifications without notice.
© 2017 Micron Technology, Inc. All rights reserved.

The LPDDR4 DRAM cannot be placed in power-down state during start DQS interval oscillator operation.

Figure 80: Basic Power-Down Entry and Exit Timing

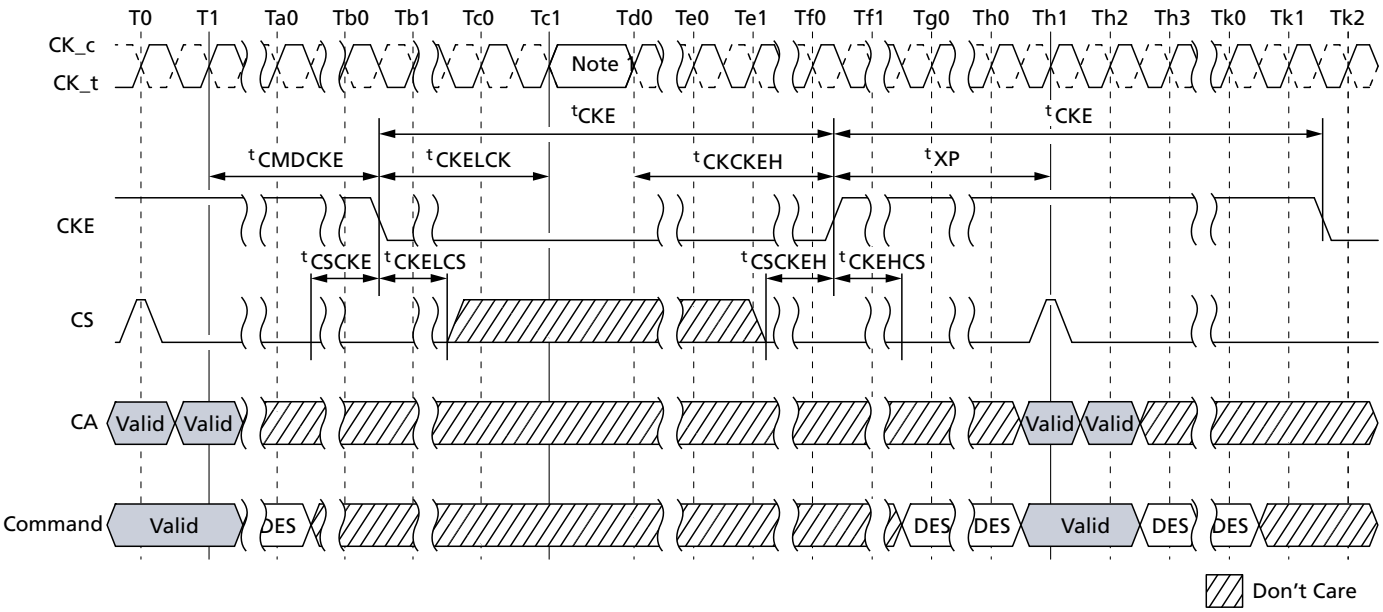

Note: 1. Input clock frequency can be changed or the input clock can be stopped or floated during power-down, provided that upon exiting power-down, the clock is stable and within specified limits for a minimum of ^{t}CKCKEH of stable clock prior to power-down exit and the clock frequency is between the minimum and maximum specified frequency for the speed grade in use.

Micron Technology, Inc. reserves the right to change products or specifications without notice.
© 2017 Micron Technology, Inc. All rights reserved.

Figure 81: Read and Read with Auto Precharge to Power-Down Entry

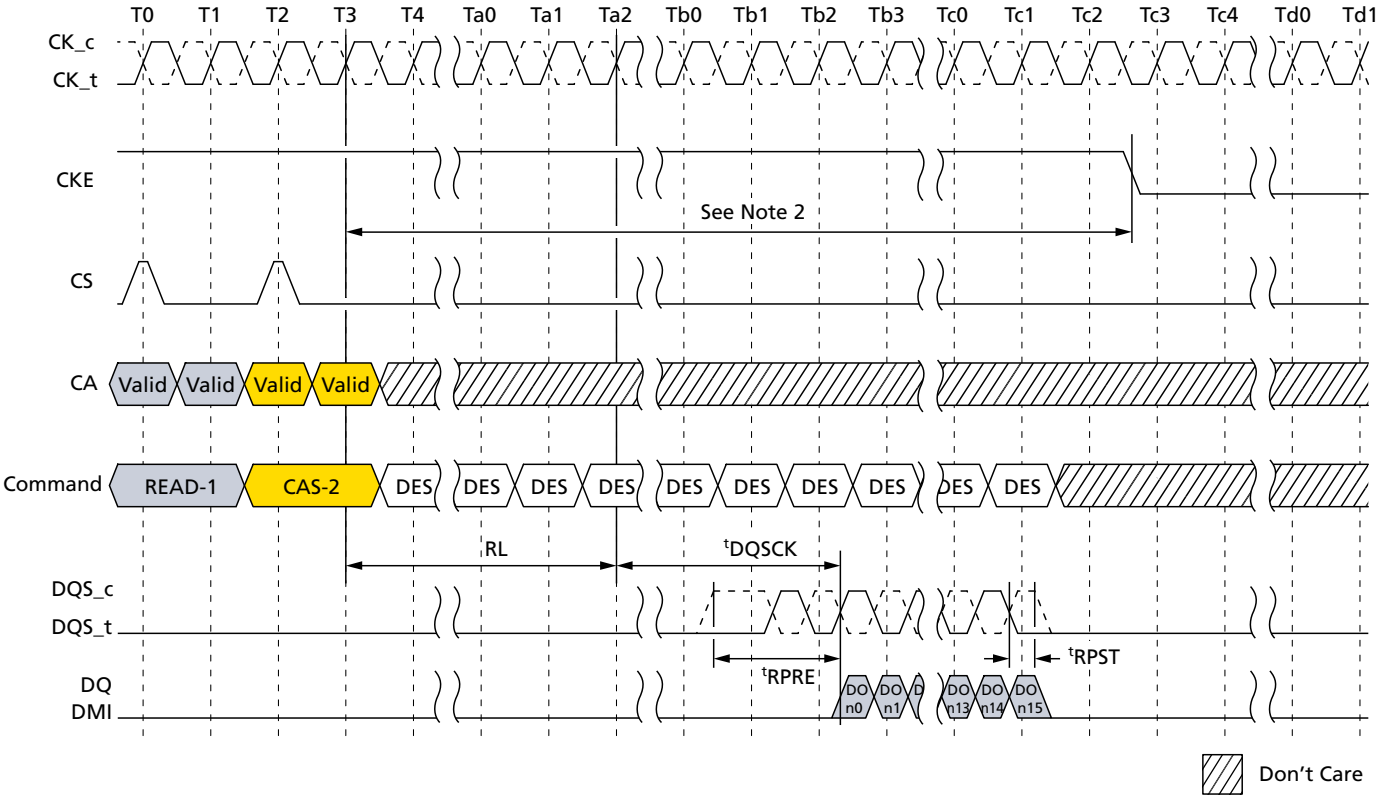

Notes: 1. CKE must be held HIGH until the end of the burst operation.

2. Minimum delay time from READ command or READ with AUTO PRECHARGE command to falling edge of CKE signal is as follows:

When read postamble = 0.5*n*CK (MR1 OP[7] = [0]),

$(RL \times {}^{t}CK) + {}^{t}DQSCK(MAX) + ((BL/2) \times {}^{t}CK) + 1{}^{t}CK$

When read postamble = 1.5*n*CK (MR1 OP[7] = [1]),

$(RL \times {}^{t}CK) + {}^{t}DQSCK(MAX) + ((BL/2) \times {}^{t}CK) + 2{}^{t}CK$

Micron Technology, Inc. reserves the right to change products or specifications without notice.
© 2017 Micron Technology, Inc. All rights reserved.

Figure 82: Write and Mask Write to Power-Down Entry

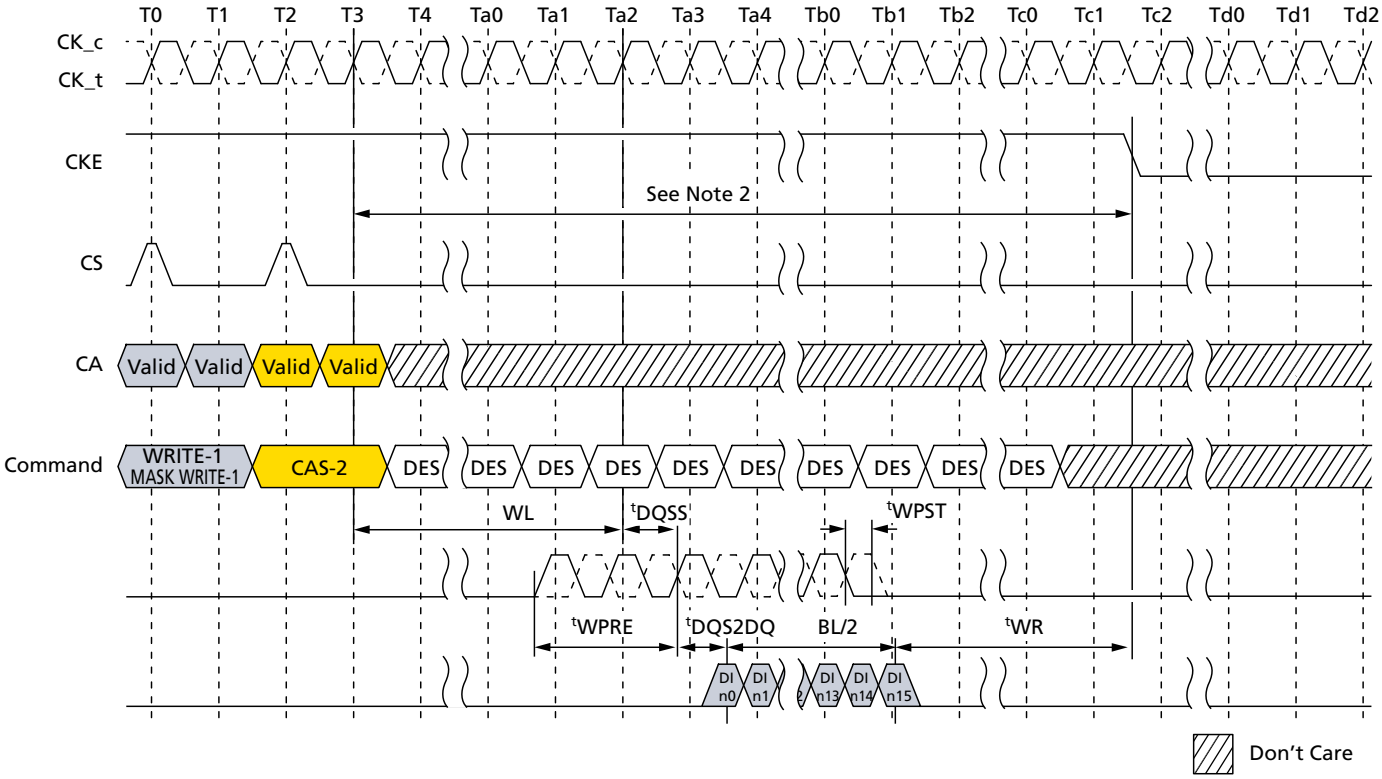

Notes:
1. CKE must be held HIGH until the end of the burst operation.
2. Minimum delay time from WRITE command or MASK WRITE command to falling edge of CKE signal is as follows:

   $(WL \times {}^{t}CK) + {}^{t}DQSS(MAX) + {}^{t}DQS2DQ(MAX) + ((BL/2) \times {}^{t}CK) + {}^{t}WR$
3. This timing is applied regardless of DQ ODT disable/enable setting: MR11 OP[2:0].
4. This timing diagram only applies to the WRITE and MASK WRITE commands without auto precharge.

Micron Technology, Inc. reserves the right to change products or specifications without notice.
© 2017 Micron Technology, Inc. All rights reserved.

Figure 83: Write With Auto Precharge and Mask Write With Auto Precharge to Power-Down Entry

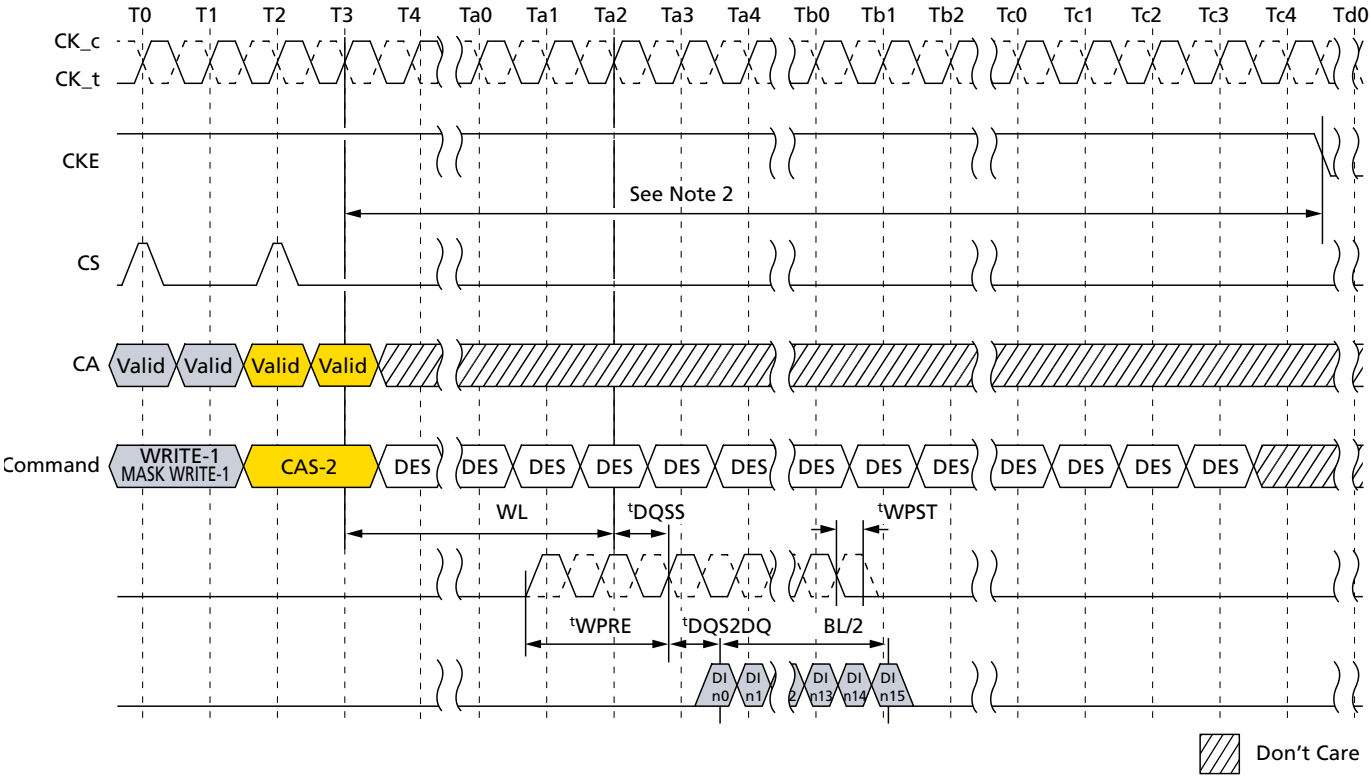

Notes:
1. CKE must be held HIGH until the end of the burst operation.
2. Delay time from WRITE with AUTO PRECHARGE command or MASK WRITE with AUTO PRECHARGE command to falling edge of CKE signal is more than
$(WL \times {}^{t}CK) + {}^{t}DQSS(MAX) + {}^{t}DQS2DQ(MAX) + ((BL/2) \times {}^{t}CK) + (nWR \times {}^{t}CK) + (2 \times {}^{t}CK)$
3. This timing is applied regardless of DQ ODT disable/enable setting: MR11 OP[2:0].

Micron Technology, Inc. reserves the right to change products or specifications without notice.
© 2017 Micron Technology, Inc. All rights reserved.

Figure 84: Refresh Entry to Power-Down Entry

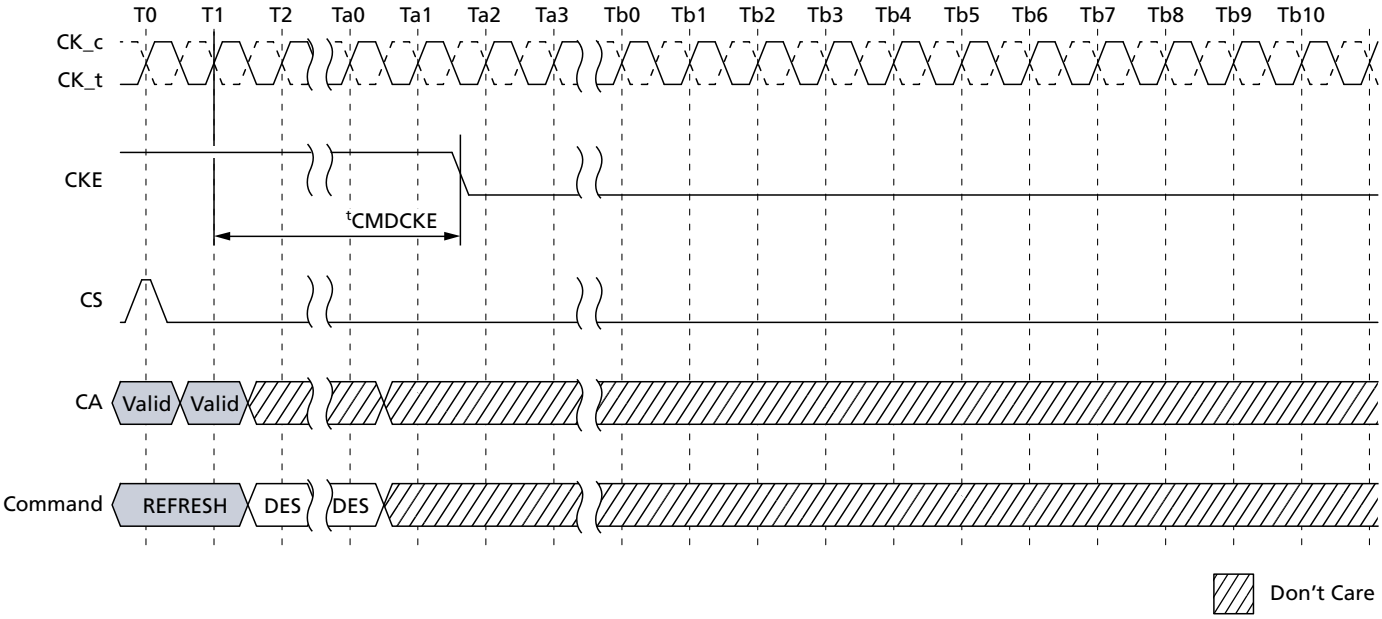

Note: 1. CKE must be held HIGH until ^{t}CMDCKE is satisfied.

Figure 85: ACTIVATE Command to Power-Down Entry

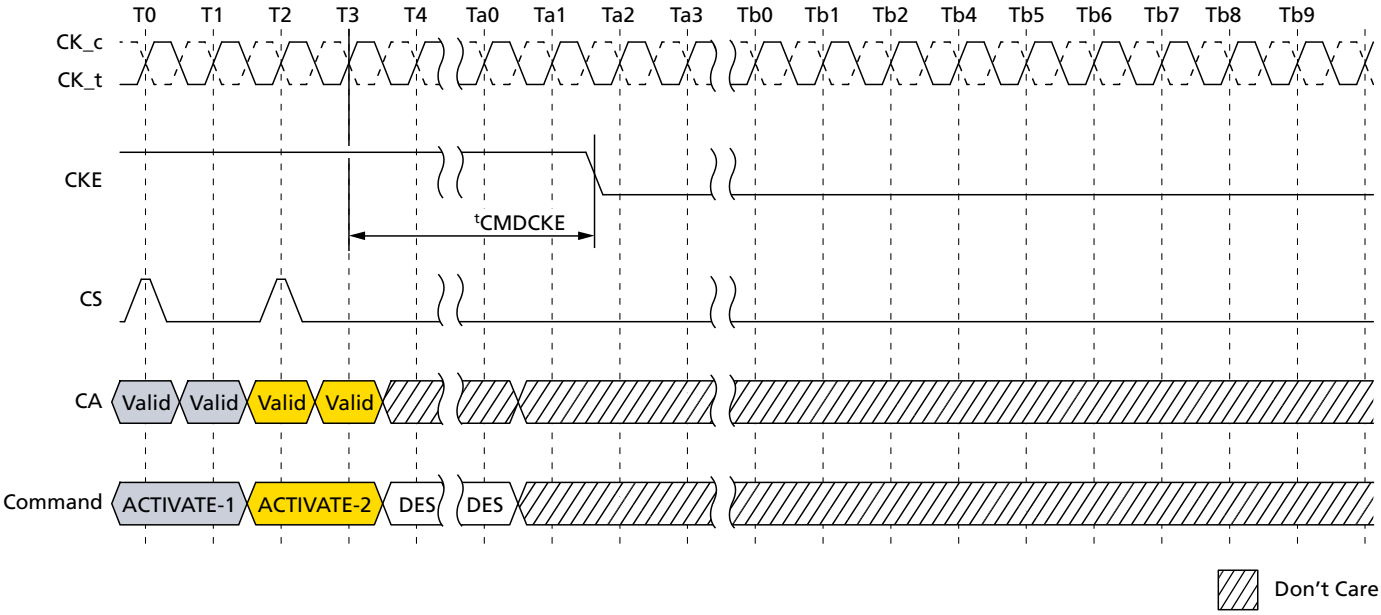

Note: 1. CKE must be held HIGH until ^{t}CMDCKE is satisfied.

Micron Technology, Inc. reserves the right to change products or specifications without notice.
© 2017 Micron Technology, Inc. All rights reserved.

Figure 86: PRECHARGE Command to Power-Down Entry

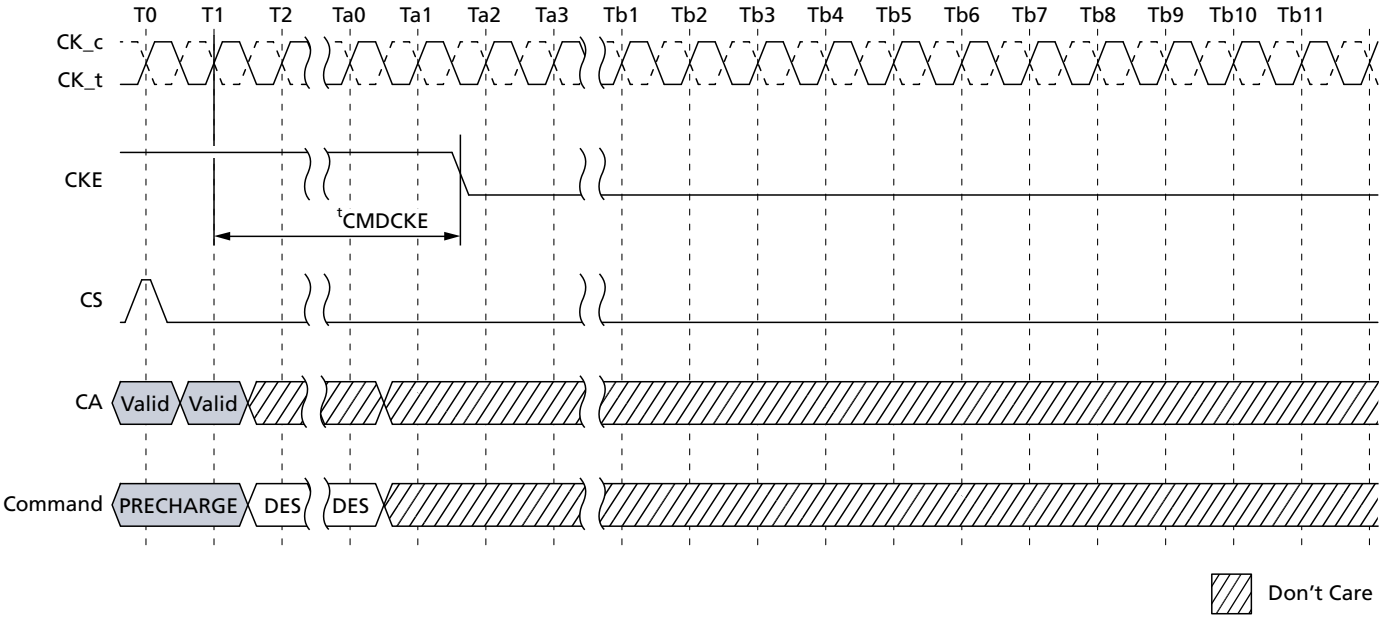

Note: 1. CKE must be held HIGH until ^{t}CMDCKE is satisfied.

Micron Technology, Inc. reserves the right to change products or specifications without notice.
© 2017 Micron Technology, Inc. All rights reserved.

Figure 87: Mode Register Read to Power-Down Entry

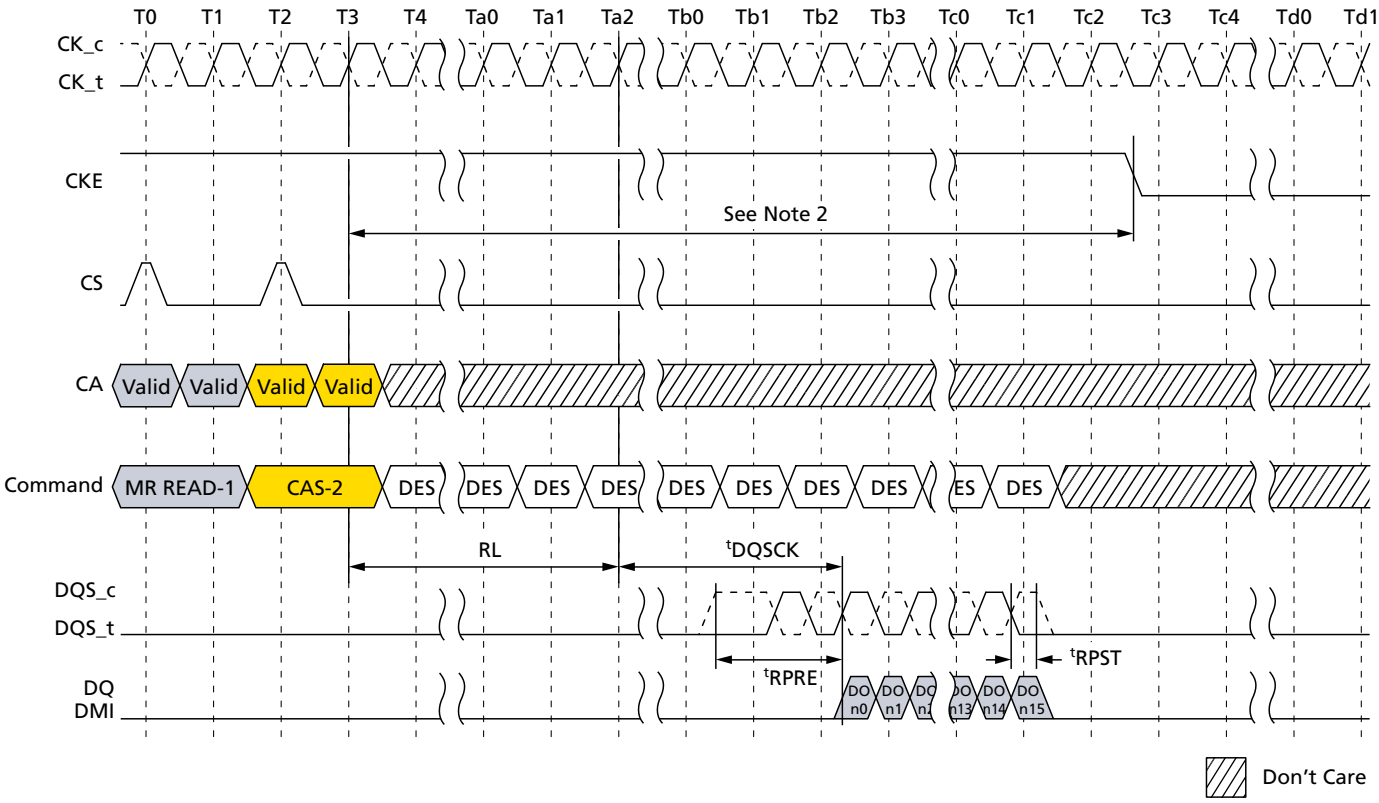

Notes: 1. CKE must be held HIGH until the end of the burst operation.

2. Minimum delay time from MODE REGISTER READ command to falling edge of CKE signal is as follows:

When read postamble = 0.5nCK (MR1 OP[7] = [0]),

$(RL \times {}^{t}CK) + {}^{t}DQSCK(MAX) + ((BL/2) \times {}^{t}CK) + 1{}^{t}CK$

When read postamble = 1.5nCK (MR1 OP[7] = [1]),

$(RL \times {}^{t}CK) + {}^{t}DQSCK(MAX) + ((BL/2) \times {}^{t}CK) + 2{}^{t}CK$

Micron Technology, Inc. reserves the right to change products or specifications without notice.
© 2017 Micron Technology, Inc. All rights reserved.

Figure 88: Mode Register Write to Power-Down Entry

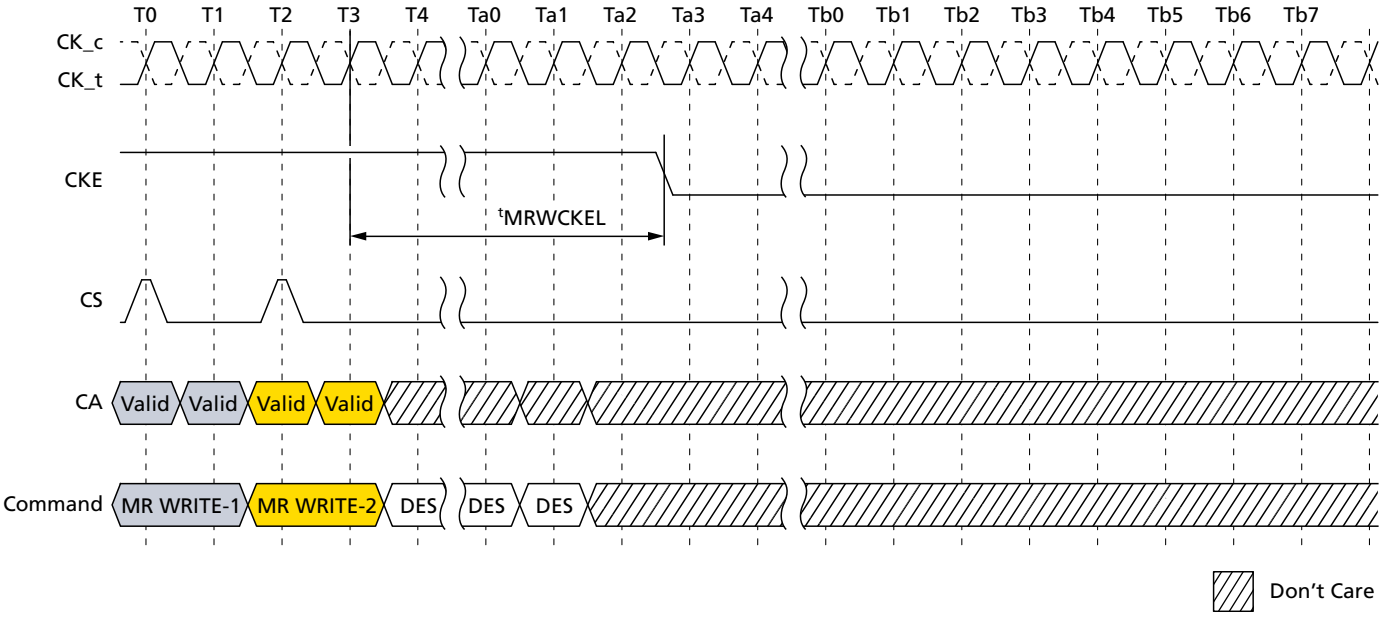

Notes:
1. CKE must be held HIGH until ^{t}MRWCKEL is satisfied.
2. This timing is the general definition for power-down entry after MODE REGISTER WRITE command. When a MODE REGISTER WRITE command changes a parameter or starts an operation that requires special timing longer than ^{t}MRWCKEL, that timing must be satisfied before CKE is driven LOW. Changing the $V_{REF(DQ)}$ value is one example, in this case the appropriate ^{t}VREF-SHORT/MIDDLE/LONG must be satisfied.

Micron Technology, Inc. reserves the right to change products or specifications without notice.
© 2017 Micron Technology, Inc. All rights reserved.

Figure 89: MULTI PURPOSE Command for ZQCAL Start to Power-Down Entry

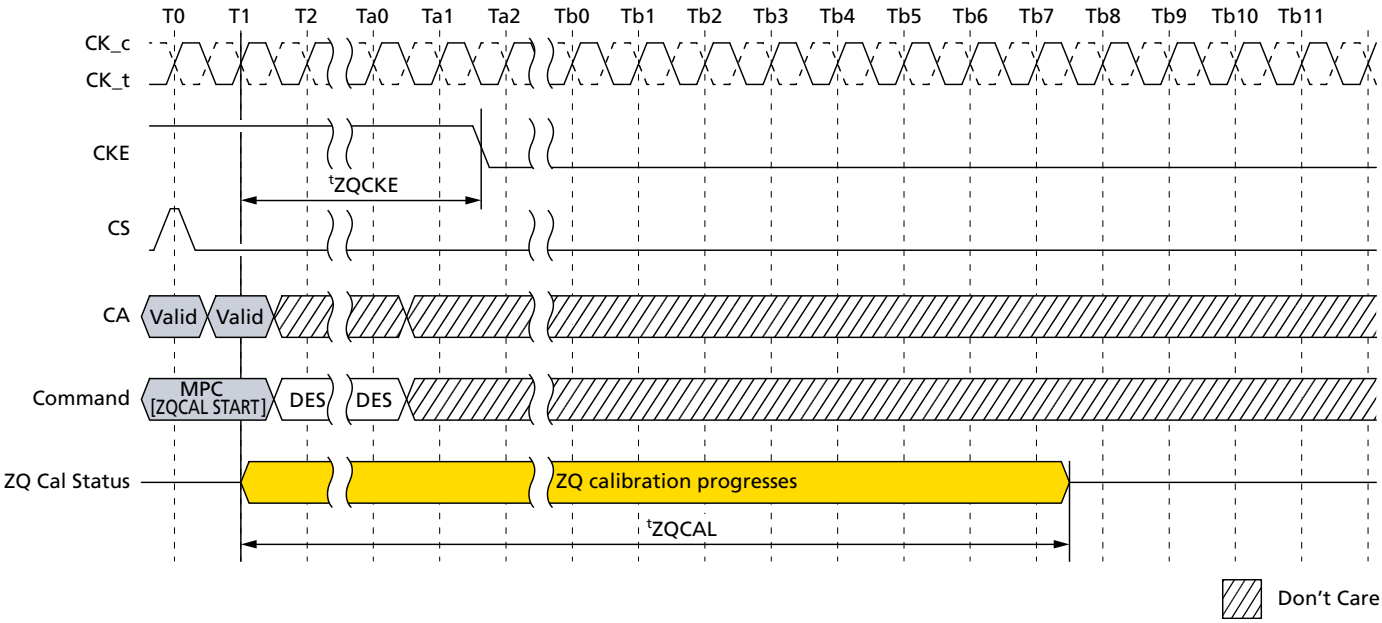

Note: 1. ZQ calibration continues if CKE goes LOW after ^{t}ZQCKE is satisfied.

Micron Technology, Inc. reserves the right to change products or specifications without notice.
© 2017 Micron Technology, Inc. All rights reserved.

Input Clock Stop and Frequency Change

Clock Frequency Change – CKE LOW

During CKE LOW, the device supports input clock frequency changes under the following conditions:

- ^{t}CK(abs)min is met for each clock cycle
- Refresh requirements apply during clock frequency change
- During clock frequency change, only REFab or REFpb commands may be executing
- Any ACTIVATE or PRECHARGE commands have completed prior to changing the frequency
- Related timing conditions, ^{t}RCD and ^{t}RP, have been met prior to changing the frequency
- The initial clock frequency must be maintained for a minimum of ^{t}CKELCK after CKE goes LOW
- The clock satisfies ^{t}CH(abs) and ^{t}CL(abs) for a minimum of ^{t}CKCKEH prior to CKE going HIGH

After the input clock frequency changes and CKE is held HIGH, additional MRW commands may be required to set the WR, RL, and so forth. These settings may require adjustment to meet minimum timing requirements at the target clock frequency.

Clock Stop – CKE LOW

During CKE LOW, the device supports clock stop under the following conditions:

- CK_t and CK_c are don't care during clock stop
- Refresh requirements apply during clock stop
- During clock stop, only REFab or REFpb commands may be executing
- Any ACTIVATE or PRECHARGE commands have completed prior to stopping the clock
- Related timing conditions, ^{t}RCD and ^{t}RP, have been met prior to stopping the clock
- The initial clock frequency must be maintained for a minimum of ^{t}CKELCK after CKE goes LOW
- The clock satisfies ^{t}CH(abs) and ^{t}CL(abs) for a minimum of ^{t}CKCKEH prior to CKE going HIGH

Clock Frequency Change – CKE HIGH

During CKE HIGH, the device supports input clock frequency change under the following conditions:

- ^{t}CK(abs)min is met for each clock cycle
- Refresh requirements apply during clock frequency change
- During clock frequency change, only REFab or REFpb commands may be executing
- Any ACTIVATE, READ, WRITE, PRECHARGE, MODE REGISTER WRITE, or MODE REGISTER READ commands (and any associated data bursts) have completed prior to changing the frequency
- Related timing conditions (^{t}RCD, ^{t}WR, ^{t}RP, ^{t}MRW, and ^{t}MRR) have been met prior to changing the frequency

Micron Technology, Inc. reserves the right to change products or specifications without notice.
© 2017 Micron Technology, Inc. All rights reserved.

- During clock frequency change, CS is held LOW
- The device is ready for normal operation after the clock satisfies ^{t}CH(abs) and ^{t}CL(abs) for a minimum of 2 × ^{t}CK + ^{t}XP

After the input clock frequency is changed, additional MRW commands may be required to set the WR, RL, and so forth. These settings may need to be adjusted to meet minimum timing requirements at the target clock frequency.

Clock Stop – CKE HIGH

During CKE HIGH, the device supports clock stop under the following conditions:

- CK_t is held LOW and CK_c is held HIGH during clock stop
- During clock stop, CS is held LOW
- Refresh requirements apply during clock stop
- During clock stop, only REFab or REFpb commands may be executing
- Any ACTIVATE, READ, WRITE, MPC (WRITE-FIFO, READ-FIFO, READ DQ CALIBRATION), PRECHARGE, MODE REGISTER WRITE, or MODE REGISTER READ commands have completed, including any associated data bursts and extra 4 clock cycles must be provided prior to stopping the clock
- Related timing conditions (^{t}RCD, ^{t}WR, ^{t}RP, ^{t}MRW, ^{t}MRR, ^{t}ZQLAT, and so forth) have been met prior to stopping the clock
- READ with AUTO PRECHARGE and WRITE with AUTO PRECHARGE commands need extra 4 clock cycles in addition to the related timing constraints, nWR and nRTP, to complete the operations
- REFab, REFpb, SRE, SRX, and MPC[ZQCAL START] commands are required to have extra 4 clock cycles prior to stopping the clock
- The device is ready for normal operation after the clock is restarted and satisfies ^{t}CH(abs) and ^{t}CL(abs) for a minimum of 2 × ^{t}CK + ^{t}XP

Micron Technology, Inc. reserves the right to change products or specifications without notice.
© 2017 Micron Technology, Inc. All rights reserved.

MODE REGISTER READ Operation

The MODE REGISTER READ (MRR) command is used to read configuration and status data from the device registers. The MRR command is initiated with CS and CA[5:0] in the proper state as defined by the Command Truth Table. The mode register address operands (MA[5:0]) enable the user to select one of 64 registers. The mode register contents are available on the first four UI data bits of DQ[7:0] after RL × ^{t}CK + ^{t}DQSCK + ^{t}DQSQ following the MRR command. Subsequent data bits contain valid but undefined content. DQS is toggled for the duration of the MODE REGISTER READ burst. The MRR has a command burst length of 16. MRR operation must not be interrupted.

Table 112: MRR

UI	0	1	2	3	4	5	6	7	8	9	10	11	12	13	14	15
DQ0	OP0				V											
DQ1	OP1				V											
DQ2	OP2				V											
DQ3	OP3				V											
DQ4	OP4				V											
DQ5	OP5				V											
DQ6	OP6				V											
DQ7	OP7				V											
DQ8–DQ15	V															
DMI0–DMI1	V															

Notes:
1. MRR data are extended to the first 4 UIs, allowing the LPDRAM controller to sample data easily.
2. DBI during MRR depends on mode register setting MR3 OP[6].
3. The read preamble and postamble of MRR are the same as for a normal read.

Micron Technology, Inc. reserves the right to change products or specifications without notice.
© 2017 Micron Technology, Inc. All rights reserved.

Figure 90: MODE REGISTER READ Operation

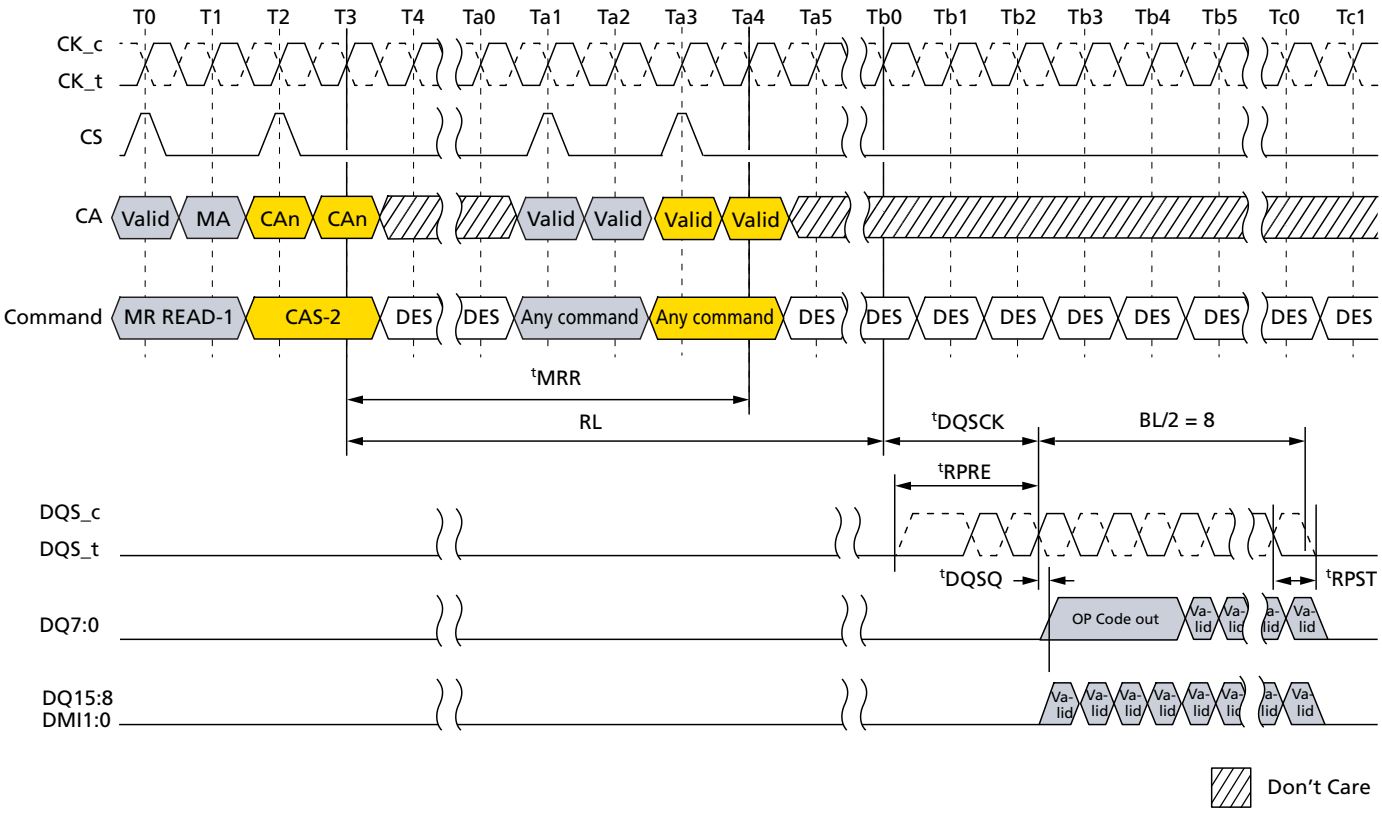

Notes:
1. Only BL = 16 is supported.
2. Only DESELECT is allowed during ^{t}MRR period.
3. There are some exceptions about issuing commands after ^{t}MRR. Refer to MRR/MRW Timing Constraints Table for detail.
4. DBI is disable mode.
5. DES commands except ^{t}MRR period are shown for ease of illustration; other commands may be valid at these times.
6. DQ/DQS: V_{SSQ} termination

MRR After a READ and WRITE Command

After a prior READ command, the MRR command must not be issued earlier than BL/2 clock cycles, in a similar way WL + BL/2 + 1 + RU(^{t}WTR/^{t}CK) clock cycles after a PRIOR WRITE, WRITE with AP, MASK WRITE, MASK WRITE with AP, and MPC[WRITE-FIFO] command in order to avoid the collision of READ and WRITE burst data on device internal data bus.

Micron Technology, Inc. reserves the right to change products or specifications without notice.
© 2017 Micron Technology, Inc. All rights reserved.

Figure 91: READ-to-MRR Timing

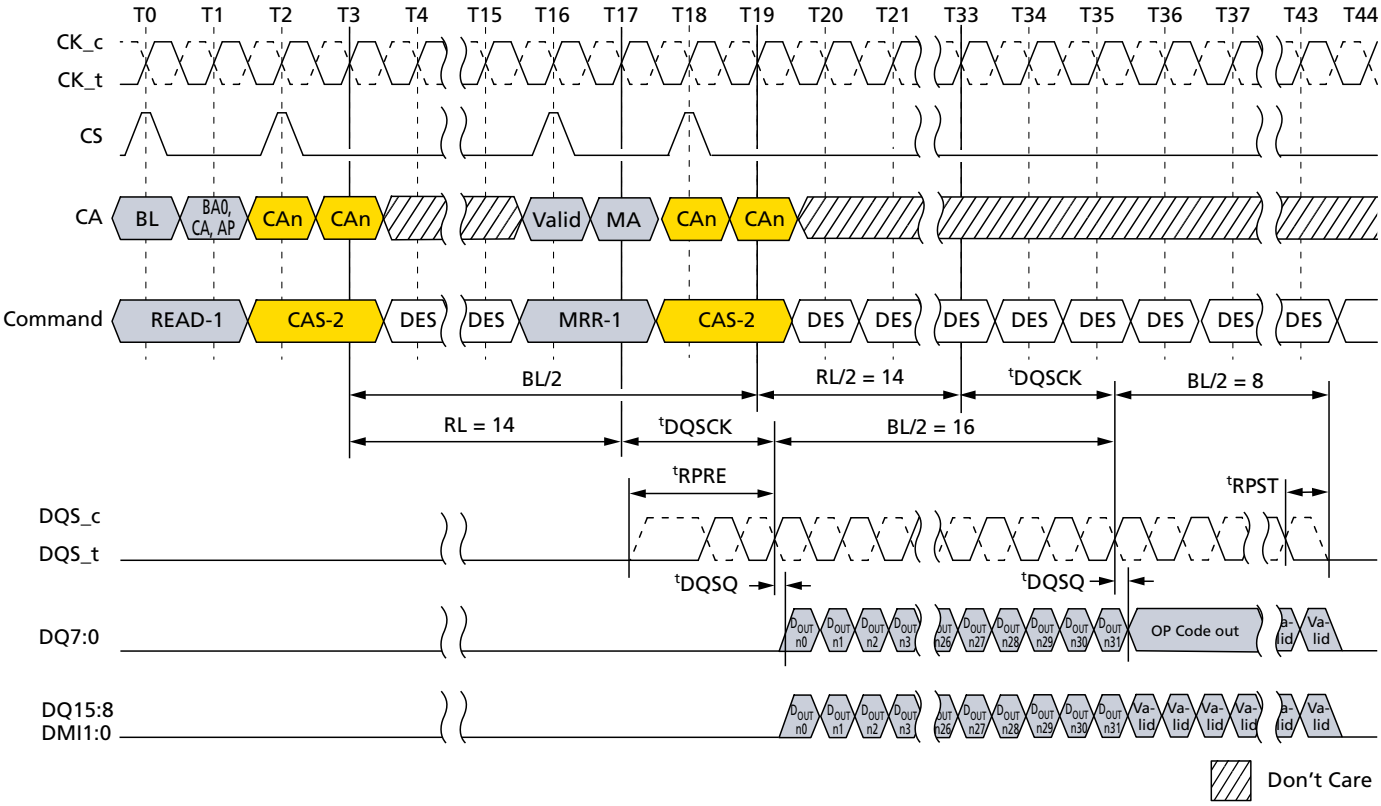

Notes:
1. The minimum number of clock cycles from the burst READ command to the MRR command is BL/2.
2. Read BL = 32, MRR BL = 16, RL = 14, Preamble = Toggle, Postamble = 0.5*n*CK, DBI = Disable, DQ/DQS: V_{SSQ} termination.
3. D_{OUT} *n* = data-out to column *n*.
4. DES commands except ^{t}MRR period are shown for ease of illustration; other commands may be valid at these times.

Micron Technology, Inc. reserves the right to change products or specifications without notice.
© 2017 Micron Technology, Inc. All rights reserved.

Figure 92: WRITE-to-MRR Timing

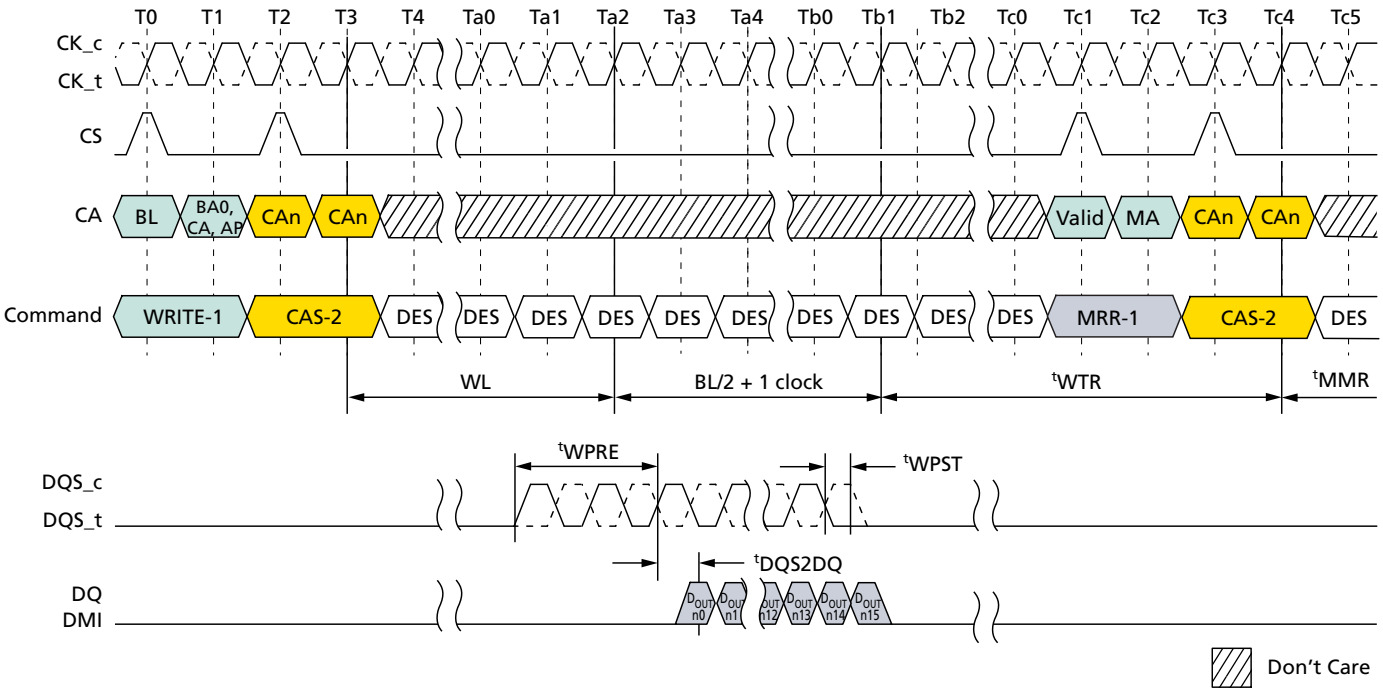

Notes:
1. Write BL = 16, Write postamble = 0.5*n*CK, DQ/DQS: V_{SSQ} termination.
2. Only DES is allowed during ^{t}MRR period.
3. D_{OUT} *n* = data-out to column *n*.
4. The minimum number of clock cycles from the BURST WRITE command to MRR command is WL + BL/2 + 1 + RU(^{t}WTR/^{t}CK).
5. ^{t}WTR starts at the rising edge of CK after the last latching edge of DQS.
6. DES commands except ^{t}MRR period are shown for ease of illustration; other commands may be valid at these times.

MRR After Power-Down Exit

Following the power-down state, an additional time, ^{t}MRRI, is required prior to issuing the MODE REGISTER READ (MRR) command. This additional time (equivalent to ^{t}RCD) is required in order to maximize power-down current savings by allowing more power-up time for the MRR data path after exit from power-down mode.

Micron Technology, Inc. reserves the right to change products or specifications without notice.
© 2017 Micron Technology, Inc. All rights reserved.

Figure 93: MRR Following Power-Down

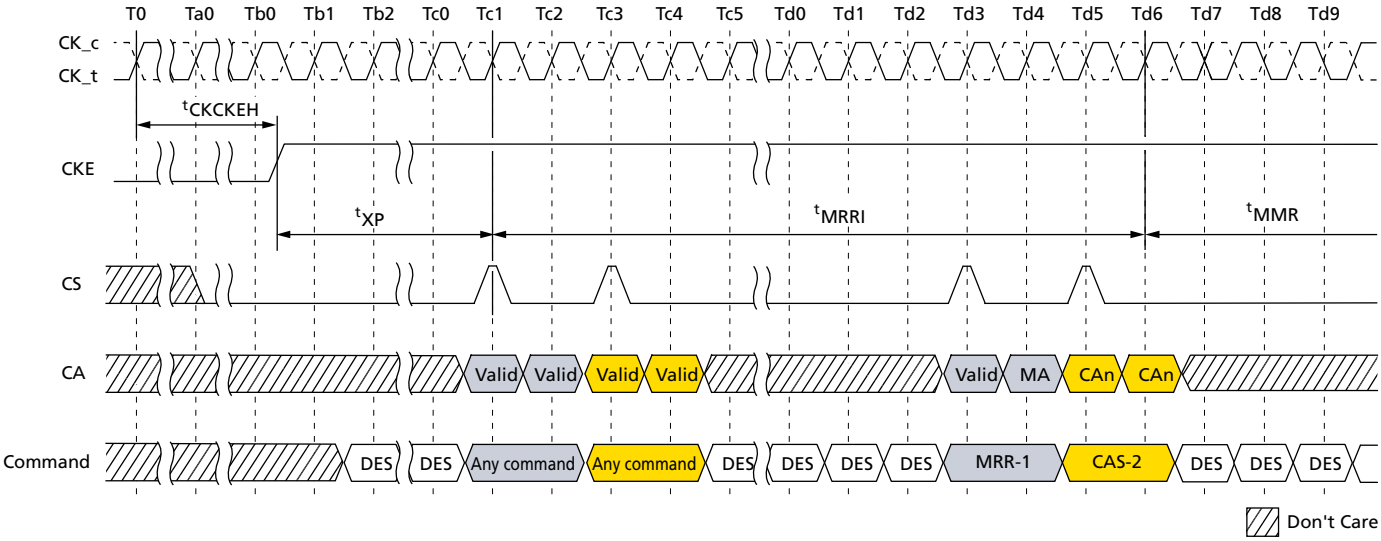

Notes: 1. Only DES is allowed during ^{t}MRR period.
2. DES commands except ^{t}MRR period are shown for ease of illustration; other commands may be valid at these times.

MODE REGISTER WRITE

The MODE REGISTER WRITE (MRW) writes configuration data to the mode registers. The MRW command is initiated with CKE, CS, and CA[5:0] to valid levels at the rising edge of the clock. The mode register address and the data written to it is contained in CA[5:0] according to the Command Truth Table. The MRW command period is defined by ^{t}MRW. Mode register WRITEs to read-only registers have no impact on the functionality of the device.

Figure 94: MODE REGISTER WRITE Timing

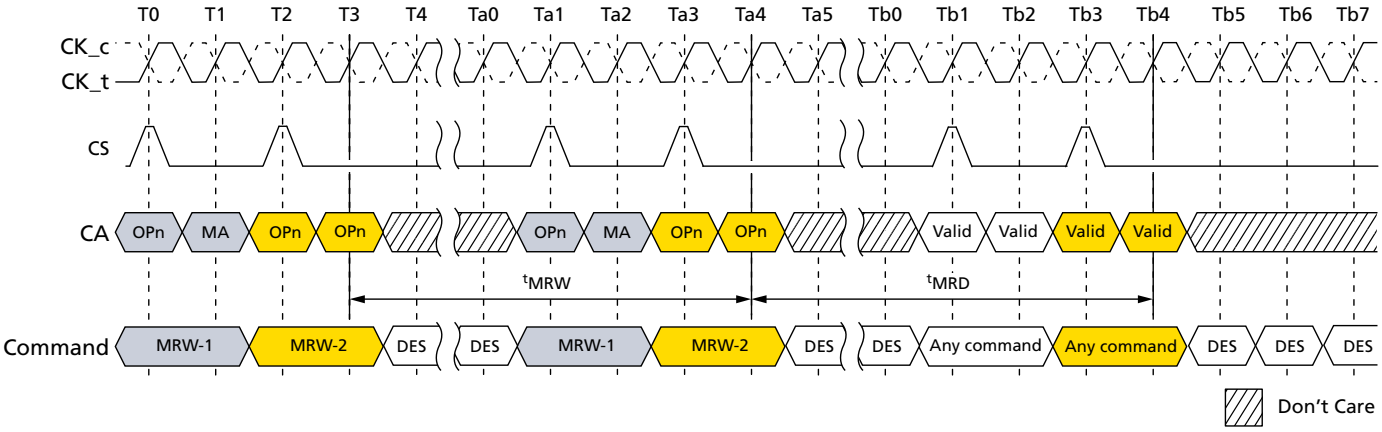

Micron Technology, Inc. reserves the right to change products or specifications without notice.
© 2017 Micron Technology, Inc. All rights reserved.

Mode Register Write States

MRW can be issued from either a bank-idle or a bank-active state. Certain restrictions may apply for MRW from an active state.

Table 113: Truth Table for MRR and MRW

Current State	Command	Intermediate State	Next State
All banks idle	MRR	Reading mode register, all banks idle	All banks idle
	MRW	Writing mode register, all banks idle	All banks idle
Bank(s) active	MRR	Reading mode register	Bank(s) active
	MRW	Writing mode register	Bank(s) active

Table 114: MRR/MRW Timing Constraints: DQ ODT is Disable

From Command	To Command	Minimum Delay Between "From Command" and "To Command"	Unit	Notes
MRR	MRR	^{t}MRR	–	
	RD/RDA	^{t}MRR	–	
	WR/WRA/MWR/MWRA	RL + RU(^{t}DQSCK(MAX)/^{t}CK) + BL/2 -WL + ^{t}WPRE + RD(^{t}RPST)	*n*CK	
	MRW	RL + RU(^{t}DQSCK(MAX)/^{t}CK) + BL/2 + 3	*n*CK	
RD/RDA	MRR	BL/2	*n*CK	
WR/WRA/MWR/MWRA		WL + 1 + BL/2 + RU(^{t}WTR/^{t}CK)	*n*CK	
MRW		^{t}MRD	–	
POWER-DOWN EXIT		^{t}XP + ^{t}MRRI	–	
MRW	RD/RDA	^{t}MRD	–	
	WR/WRA/MWR/MWRA	^{t}MRD	–	
	MRW	^{t}MRW	–	
RD/ RD-FIFO/ READ DQ CAL	MRW	RL + BL/2 + RU(^{t}DQSCK(MAX)/^{t}CK) + RD(^{t}RPST) + MAX(RU(7.5ns/^{t}CK), 8*n*CK)	*n*CK	
RD with AUTO PRECHARGE		RL + BL/2 + RU(^{t}DQSCK(MAX)/^{t}CK) + RD(^{t}RPST) + MAX(RU(7.5ns/^{t}CK), 8*n*CK) + *n*RTP - 8	*n*CK	
WR/ MWR/ WR-FIFO		WL + 1 + BL/2 + MAX(RU(7.5ns/^{t}CK), 8*n*CK)	*n*CK	
WR/MWR with AUTO PRE-CHARGE		WL + 1 + BL/2 + MAX(RU(7.5ns/^{t}CK), 8*n*CK) + *n*WR	*n*CK	

Micron Technology, Inc. reserves the right to change products or specifications without notice.
© 2017 Micron Technology, Inc. All rights reserved.

Table 115: MRR/MRW Timing Constraints: DQ ODT is Enable

From Command	To Command	Minimum Delay Between "From Command" and "To Command"	Unit	Notes
MRR	MRR	^{t}MRR	–	
	RD/RDA	^{t}MRR	–	
	WR/WRA/MWR/MWRA	RL + RU(^{t}DQSCK(MAX)/^{t}CK) + BL/2 - ODTLon - RD(^{t}ODTon(MIN)/^{t}CK) + RD(^{t}RPST) + 1	*n*CK	
	MRW	RL + RU(^{t}DQSCK(MAX)/^{t}CK) + BL/2 + 3	*n*CK	
RD/RDA	MRR	BL/2	*n*CK	
WR/WRA/MWR/ MWRA		WL + 1 + BL/2 + RU(^{t}WTR/^{t}CK)	*n*CK	
MRW		^{t}MRD	–	
POWER-DOWN EXIT		^{t}XP + ^{t}MRRI	–	
MRW	RD/RDA	^{t}MRD	–	
	WR/WRA/MWR/MWRA	^{t}MRD	–	
	MRW	^{t}MRW	–	
RD/ RD-FIFO/ READ DQ CAL	MRW	RL + BL/2 + RU(^{t}DQSCK(MAX)/^{t}CK) + RD(^{t}RPST) + MAX(RU(7.5ns/^{t}CK), 8*n*CK)	*n*CK	
RD with AUTO PRECHARGE		RL + BL/2 + RU(^{t}DQSCK(MAX)/^{t}CK) + RD(^{t}RPST) + MAX(RU(7.5ns/^{t}CK), 8*n*CK) + *n*RTP - 8	*n*CK	
WR/ MWR/ WR-FIFO		WL + 1 + BL/2 + MAX(RU(7.5ns/^{t}CK), 8*n*CK)	*n*CK	
WR/MWR with AUTO PRE-CHARGE		WL + 1 + BL/2 + MAX(RU(7.5ns/^{t}CK), 8*n*CK) + *n*WR	*n*CK	

V_{REF} Current Generator (VRCG)

LPDDR4 SDRAM V_{REF} current generators (VRCG) incorporate a high current mode to reduce the settling time of the internal $V_{REF(DQ)}$ and $V_{REF(CA)}$ levels during training and when changing frequency set points during operation. The high current mode is enabled by setting MR13[OP3] = 1. Only DESELECT commands may be issued until ^{t}VRCG_ENABLE is satisfied. ^{t}VRCG_ENABLE timing is shown below.

Micron Technology, Inc. reserves the right to change products or specifications without notice.
© 2017 Micron Technology, Inc. All rights reserved.

Figure 95: VRCG Enable Timing

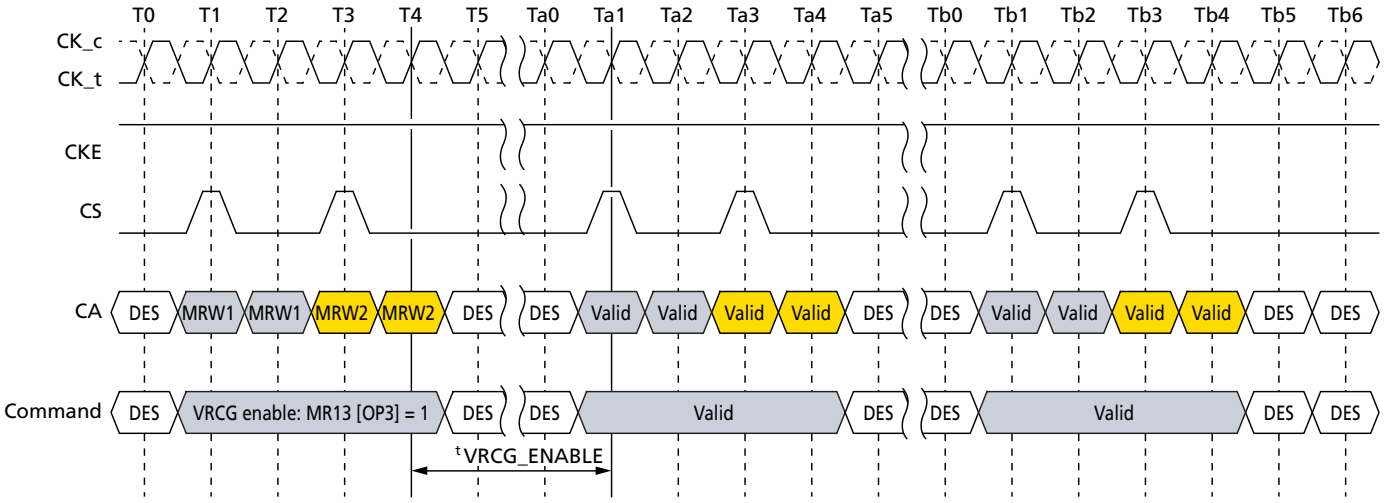

VRCG high current mode is disabled by setting MR13[OP3] = 0. Only DESELECT commands may be issued until ^{t}VRCG_DISABLE is satisfied. ^{t}VRCG_DISABLE timing is shown below.

Figure 96: VRCG Disable Timing

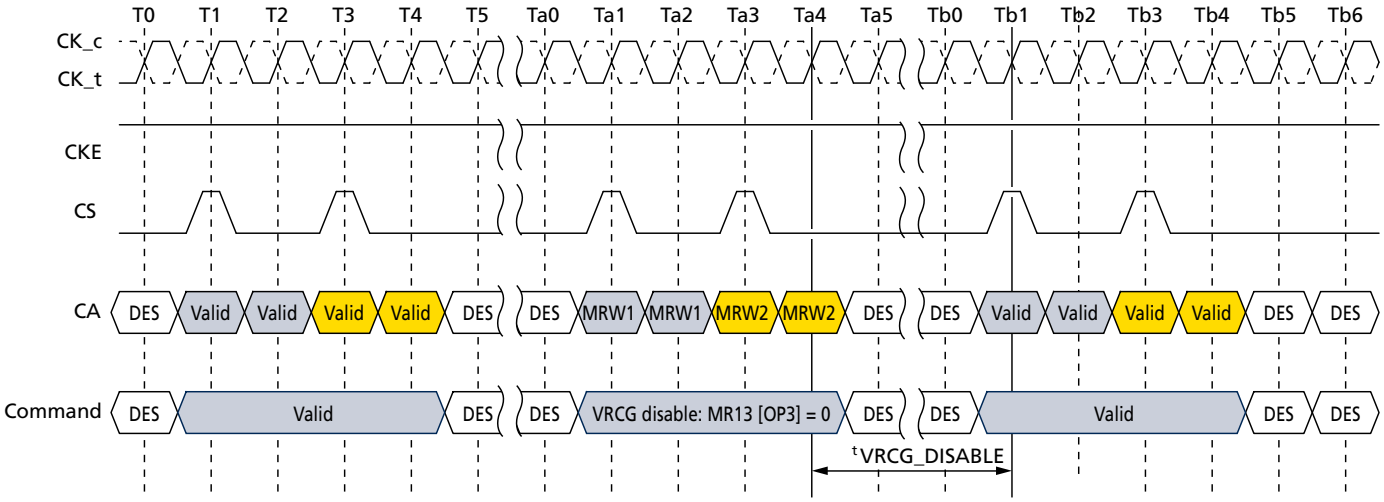

Note that LPDDR4 SDRAM devices support $V_{FER(CA)}$ and $V_{REF(DQ)}$ range and value changes without enabling VRCG high current mode.

Table 116: VRCG Enable/Disable Timing

Parameter	Symbol	Min	Max	Unit
V_{REF} high current mode enable time	^{t}VRCG_ENABLE	–	200	ns
V_{REF} high current mode disable time	^{t}VRCG_DISABLE	–	100	ns

Micron Technology, Inc. reserves the right to change products or specifications without notice.
© 2017 Micron Technology, Inc. All rights reserved.

V_{REF} Training

$V_{REF(CA)}$ Training

The device's internal $V_{REF(CA)}$ specification parameters are operating voltage range, step size, V_{REF} step time, V_{REF} full-range step time, and V_{REF} valid level.

The voltage operating range specifies the minimum required V_{REF} setting range for LPDDR4 devices. The minimum range is defined by $V_{REF,max}$ and $V_{REF,min}$.

Figure 97: V_{REF} Operating Range ($V_{REF,max}$, $V_{REF,min}$)

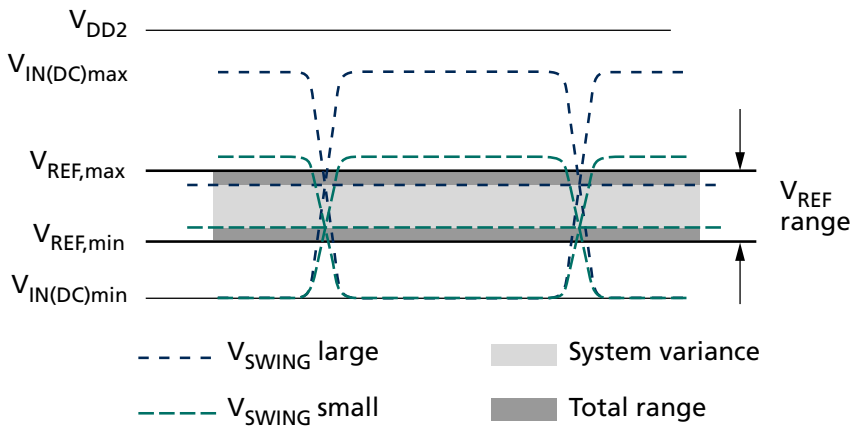

The V_{REF} step size is defined as the step size between adjacent steps. However, for a given design, the device has one value for V_{REF} step size that falls within the given range.

The V_{REF} set tolerance is the variation in the V_{REF} voltage from the ideal setting. This accounts for accumulated error over multiple steps. There are two ranges for V_{REF} set tolerance uncertainty. The range of V_{REF} set tolerance uncertainty is a function of the number of steps *n*.

The V_{REF} set tolerance is measured with respect to the ideal line that is based on the two endpoints, where the endpoints are at the minimum and maximum V_{REF} values for a specified range.

Micron Technology, Inc. reserves the right to change products or specifications without notice.
© 2017 Micron Technology, Inc. All rights reserved.

Figure 98: V_{REF} Set-Point Tolerance and Step Size

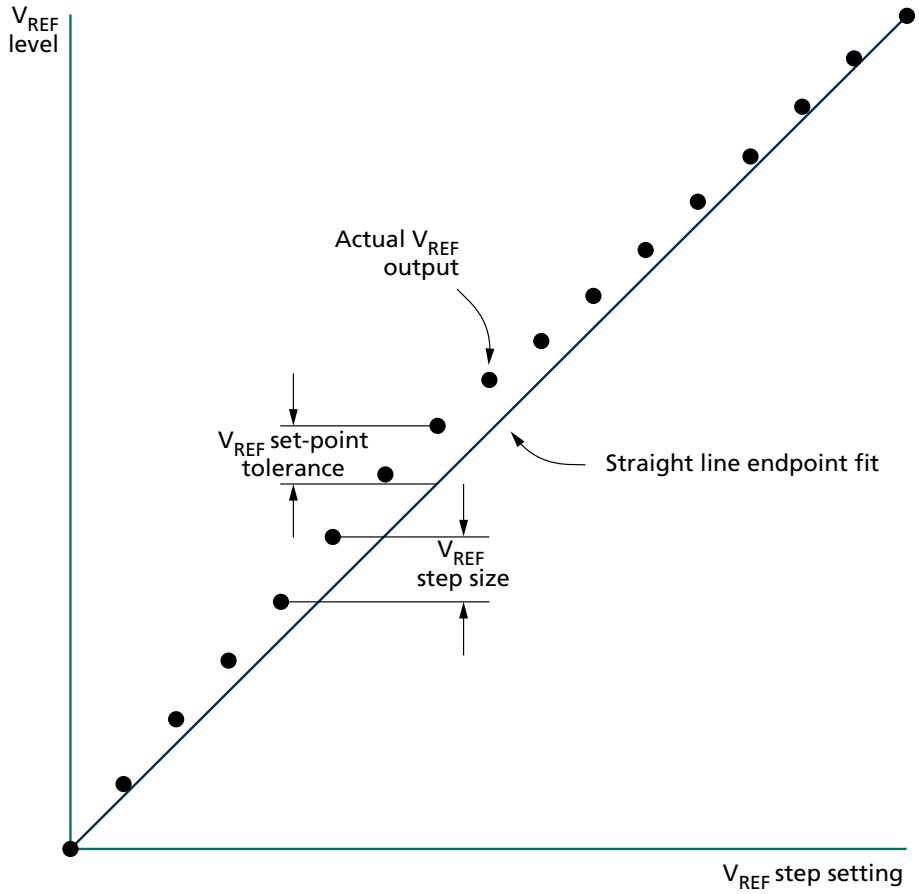

The V_{REF} increment/decrement step times are defined by $^{t}V_{REF}$_TIME-SHORT, $^{t}V_{REF}$_TIME-MIDDLE, and $^{t}V_{REF}$_TIME-LONG. The parameters are defined from TS to TE as shown below, where TE is referenced to when the V_{REF} voltage is at the final DC level within the V_{REF} valid tolerance (V_{REF,val_tol}).

The V_{REF} valid level is defined by V_{REF,val_tol} to qualify the step time TE (see the following figures). This parameter is used to ensure an adequate RC time constant behavior of the voltage level change after any V_{REF} increment/decrement adjustment. This parameter is only applicable for LPDDR4 component level validation/characterization.

$^{t}V_{REF}$_TIME-SHORT is for a single step size increment/decrement change in the V_{REF} voltage.

$^{t}V_{REF}$_TIME-MIDDLE is at least two stepsizes increment/decrement change within the same $V_{REF(CA)}$ range in V_{REF} voltage.

$^{t}V_{REF}$_TIME-LONG is the time including up to $V_{REF,min}$ to $V_{REF,max}$ or $V_{REF,max}$ to $V_{REF,min}$ change across the $V_{REF(CA)}$ range in V_{REF} voltage.

TS is referenced to MRW command clock.

TE is referenced to $V_{REF_val_tol}$.

Micron Technology, Inc. reserves the right to change products or specifications without notice.
© 2017 Micron Technology, Inc. All rights reserved.

Figure 99: $^tV_{ref}$ for Short, Middle, and Long Timing Diagram

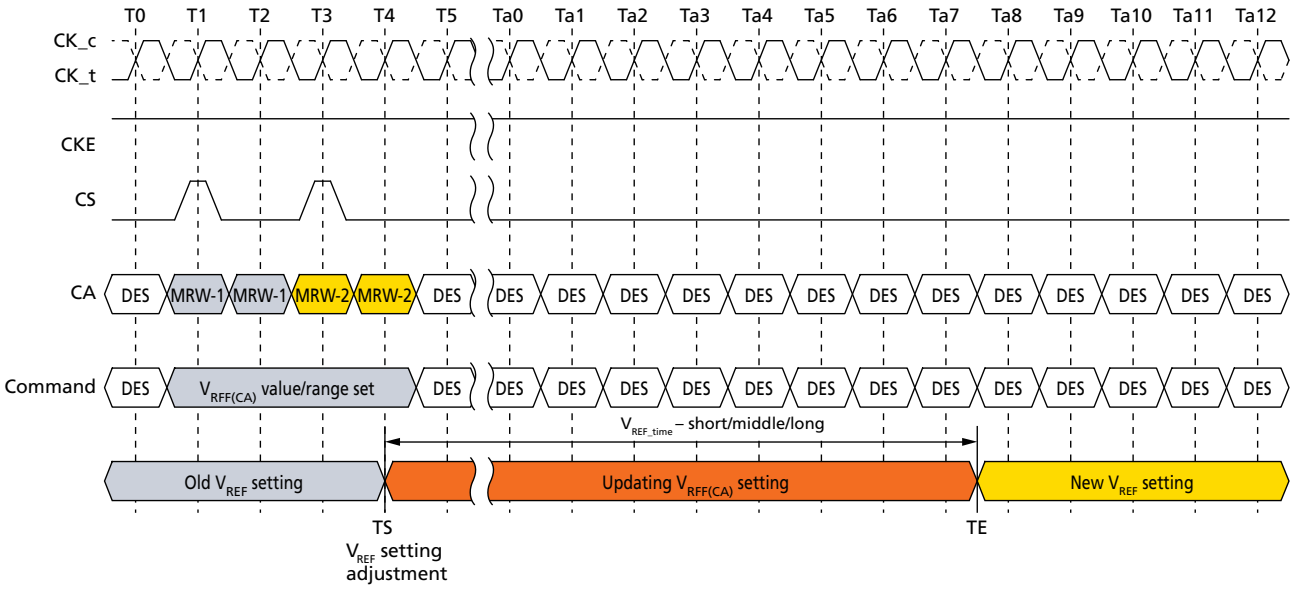

The MRW command to the mode register bits are as follows;

MR12 OP[5:0] : $V_{REF(CA)}$ Setting

MR12 OP[6] : $V_{REF(CA)}$ Range

The minimum time required between two V_{REF} MRW commands is $^tV_{REF}$_TIME-SHORT for a single step and $^tV_{REF}$_TIME-MIDDLE for a full voltage range step.

Figure 100: $V_{REF(CA)}$ Single-Step Increment

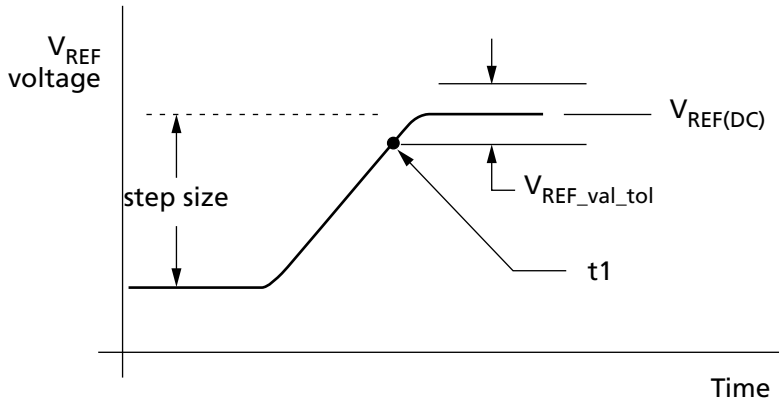

Micron Technology, Inc. reserves the right to change products or specifications without notice.
© 2017 Micron Technology, Inc. All rights reserved.

Figure 101: $V_{REF(CA)}$ Single-Step Decrement

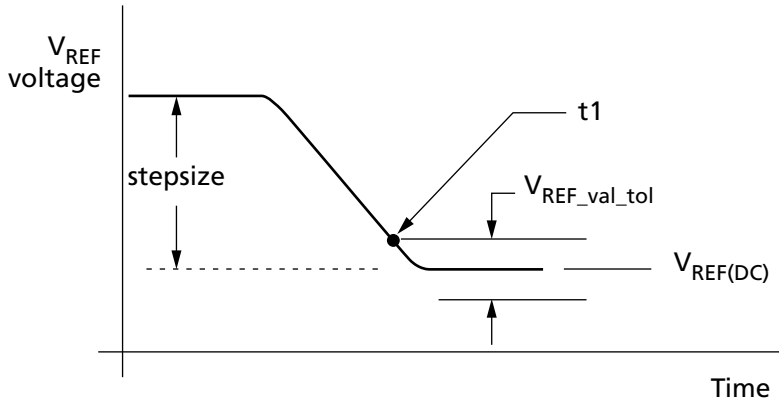

Figure 102: $V_{REF(CA)}$ Full Step from $V_{REF,min}$ to $V_{REF,max}$

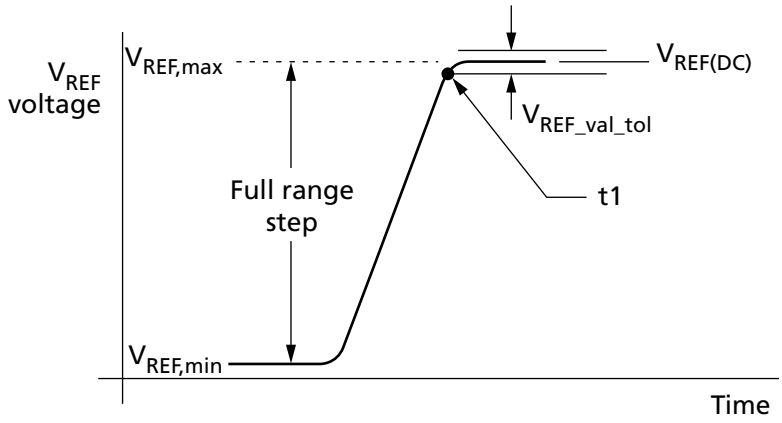

Figure 103: $V_{REF(CA)}$ Full Step from $V_{REF,max}$ to $V_{REF,min}$

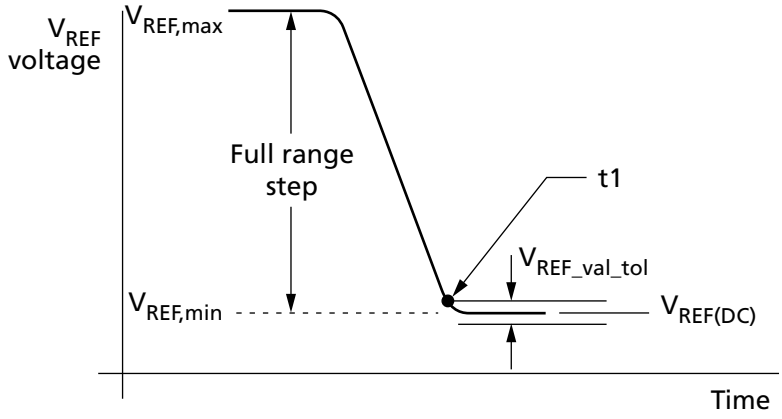

The following table contains the CA internal V_{REF} specification that will be characterized at the component level for compliance.

Micron Technology, Inc. reserves the right to change products or specifications without notice.
© 2017 Micron Technology, Inc. All rights reserved.

Table 117: Internal $V_{REF(CA)}$ Specifications

Symbol	Parameter	Min	Typ	Max	Unit	Notes
$V_{REF(CA),max_r0}$	$V_{REF(CA)}$ range-0 MAX operating point	–	–	44.9%	V_{DDQ}	1, 11
$V_{REF(CA),min_r0}$	$V_{REF(CA)}$ range-0 MIN operating point	15.0%	–	–	V_{DDQ}	1, 11
$V_{REF(CA),max_r1}$	$V_{REF(CA)}$ range-1 MAX operating point	–	–	62.9%	V_{DDQ}	1, 11
$V_{REF(CA),min_r1}$	$V_{REF(CA)}$ range-1 MIN operating point	32.9%	–	–	V_{DDQ}	1, 11
$V_{REF(CA),step}$	$V_{REF(CA)}$ step size	0.50%	0.60%	0.70%	V_{DDQ}	2
$V_{REF(CA),set_tol}$	$V_{REF(CA)}$ set tolerance	–11	0	11	mV	3, 4, 6
		–1.1	0	1.1	mV	3, 5, 7
$^{t}V_{REF_}$TIME-SHORT	$V_{REF(CA)}$ step time	–	–	100	ns	8
$^{t}V_{REF_}$TIME-MIDDLE		–	–	200	ns	12
$^{t}V_{REF_}$TIME-LONG		–	–	250	ns	9
$^{t}V_{REF_time_weak}$		–	–	1	ms	13, 14
$V_{REF(CA)_val_tol}$	$V_{REF(CA)}$ valid tolerance	–0.10%	0.00%	0.10%	V_{DDQ}	10

Notes:
1. $V_{REF(CA)}$ DC voltage referenced to $V_{DDQ(DC)}$.
2. $V_{REF(CA)}$ step size increment/decrement range. $V_{REF(CA)}$ at DC level.
3. $V_{REF(CA),new} = V_{REF(CA),old} + n \times V_{REF(CA),step}$; n = number of steps; if increment, use "+"; if decrement, use "–".
4. The minimum value of $V_{REF(CA)}$ setting tolerance = $V_{REF(CA),new}$ - 11mV. The maximum value of $V_{REF(CA)}$ setting tolerance = $V_{REF(CA),new}$ + 11mV. For n > 4.
5. The minimum value of $V_{REF(CA)}$ setting tolerance = $V_{REF(CA),new}$ - 1.1mV. The maximum value of $V_{REF(CA)}$ setting tolerance = $V_{REF(CA),new}$ + 1.1mV. For n ≤ 4.
6. Measured by recording the minimum and maximum values of the $V_{REF(CA)}$ output over the range, drawing a straight line between those points and comparing all other $V_{REF(CA)}$ output settings to that line.
7. Measured by recording the minimum and maximum values of the $V_{REF(CA)}$ output across four consecutive steps (n = 4), drawing a straight line between those points and comparing all other $V_{REF(CA)}$ output settings to that line.
8. Time from MRW command to increment or decrement one step size for $V_{REF(CA)}$.
9. Time from MRW command to increment or decrement $V_{REF,min}$ to $V_{REF,max}$ or $V_{REF,max}$ to $V_{REF,min}$ change across the $V_{REF(CA)}$ range in V_{REF} voltage.
10. Only applicable for DRAM component level test/characterization purposes. Not applicable for normal mode of operation. V_{REF} valid is to qualify the step times which will be characterized at the component level.
11. DRAM range-0 or range-1 set by MR12 OP[6].
12. Time from MRW command to increment or decrement more than one step size up to a full range of V_{REF} voltage within the same $V_{REF(CA)}$ range.
13. Applies when VRCG high current mode is not enabled, specified by MR13 [OP3] = 0b.
14. $^{t}V_{REF_}$time_weak covers all $V_{REF(CA)}$ range and value change conditions are applied to $^{t}V_{REF_}$TIME-SHORT/MIDDLE/LONG.

Micron Technology, Inc. reserves the right to change products or specifications without notice.
© 2017 Micron Technology, Inc. All rights reserved.

$V_{REF(DQ)}$ Training

The device's internal $V_{REF(DQ)}$ specification parameters are operating voltage range, step size, V_{REF} step tolerance, V_{REF} step time and V_{REF} valid level.

The voltage operating range specifies the minimum required V_{REF} setting range for LPDDR4 devices. The minimum range is defined by $V_{REF,max}$ and $V_{REF,min}$.

Figure 104: V_{REF} Operating Range ($V_{REF,max}$, $V_{REF,min}$)

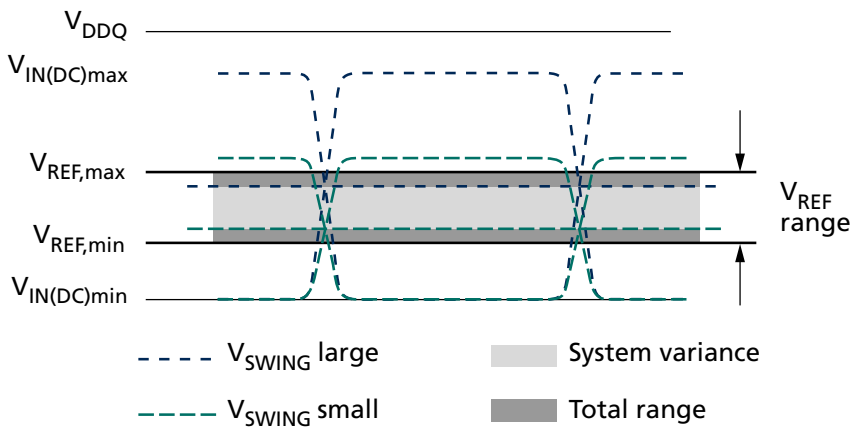

The V_{REF} step size is defined as the step size between adjacent steps. However, for a given design, the device has one value for V_{REF} step size that falls within the given range.

The V_{REF} set tolerance is the variation in the V_{REF} voltage from the ideal setting. This accounts for accumulated error over multiple steps. There are two ranges for V_{REF} set tolerance uncertainty. The range of V_{REF} set tolerance uncertainty is a function of the number of steps *n*.

The V_{REF} set tolerance is measured with respect to the ideal line that is based on the two endpoints, where the endpoints are at the minimum and maximum V_{REF} values for a specified range.

Micron Technology, Inc. reserves the right to change products or specifications without notice.
© 2017 Micron Technology, Inc. All rights reserved.

Figure 105: V_{REF} Set Tolerance and Step Size

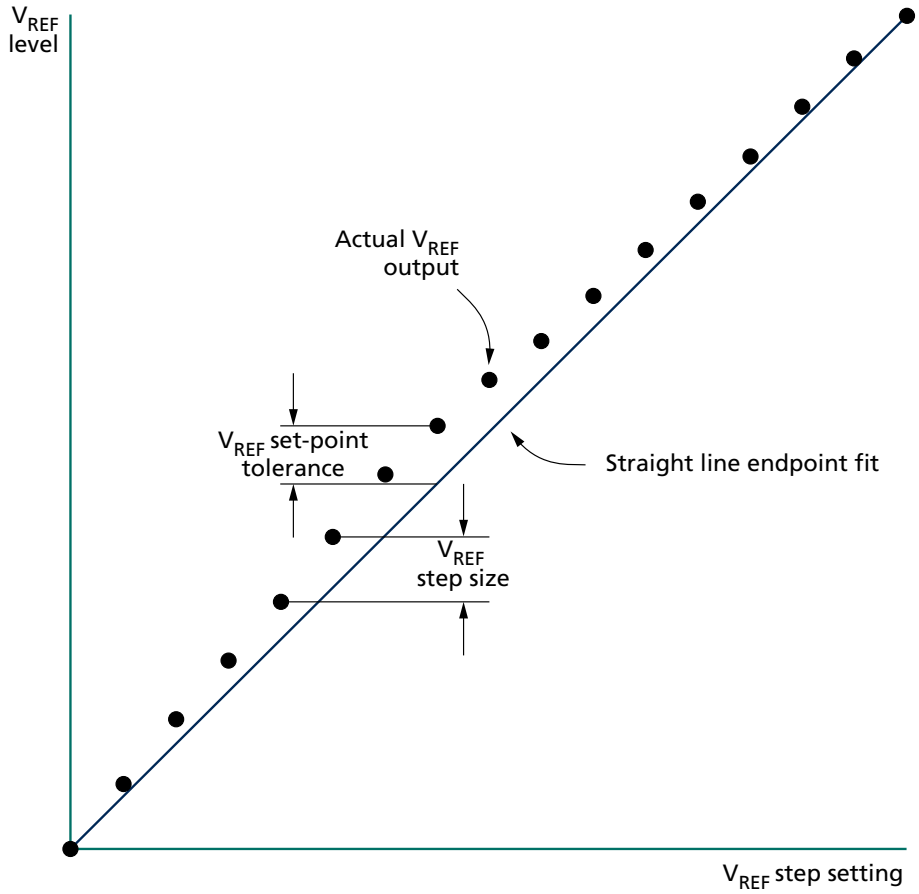

The V_{REF} increment/decrement step times are defined by $^{t}V_{REF}$_TIME-SHORT, $^{t}V_{REF}$_TIME-MIDDLE and $^{t}V_{REF}$_TIME-LONG. The $^{t}V_{REF}$_TIME-SHORT, $^{t}V_{REF}$_TIME-MIDDLE and $^{t}V_{REF}$_TIME-LONG times are defined from TS to TE in the following figure where TE is referenced to when the V_{REF} voltage is at the final DC level within the V_{REF} valid tolerance (V_{REF,VAL_TOL}).

The V_{REF} valid level is defined by V_{REF,VAL_TOL} to qualify the step time TE (see the figure below). This parameter is used to ensure an adequate RC time constant behavior of the voltage level change after any V_{REF} increment/decrement adjustment. This parameter is only applicable for DRAM component level validation/characterization.

$^{t}V_{REF}$_TIME-SHORT is for a single step size increment/decrement change in the V_{REF} voltage.

$^{t}V_{REF}$_TIME-MIDDLE is at least two step sizes of increment/decrement change in the $V_{REF(DQ)}$ range in the V_{REF}voltage.

$^{t}V_{REF}$_TIME-LONG is the time including and up to the full range of V_{REF} (MIN to MAX or MAX to MIN) across the $V_{REF(DQ)}$ range in V_{REF} voltage.

Micron Technology, Inc. reserves the right to change products or specifications without notice.
© 2017 Micron Technology, Inc. All rights reserved.

Figure 106: $V_{REF(DQ)}$ Transition Time for Short, Middle, or Long Changes

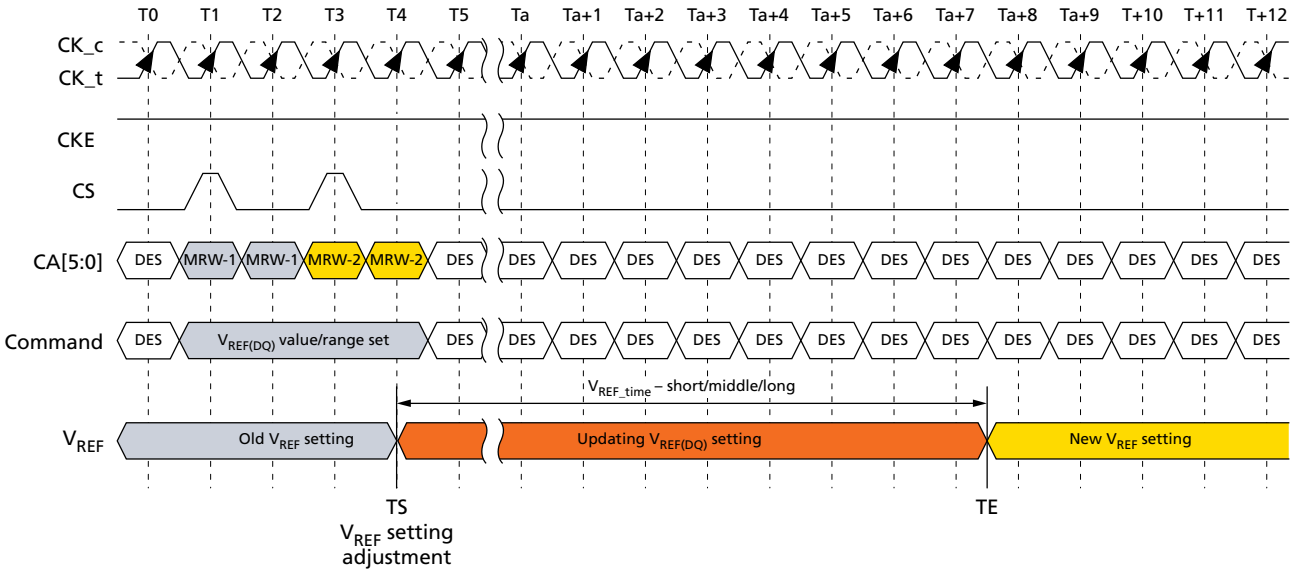

Notes: 1. TS is referenced to MRW command clock.
2. TE is referenced to V_{REF,VAL_TOL}.

The MRW command to the mode register bits are defined as:

MR14 OP[5:0]: $V_{REF(DQ)}$ setting

MR14 OP[6]: $V_{REF(DQ)}$ range

The minimum time required between two V_{REF} MRW commands is $^{t}V_{REF}$_TIME-SHORT for a single step and $^{t}V_{REF}$_TIME-MIDDLE for a full voltage range step.

Figure 107: $V_{REF(DQ)}$ Single-Step Size Increment

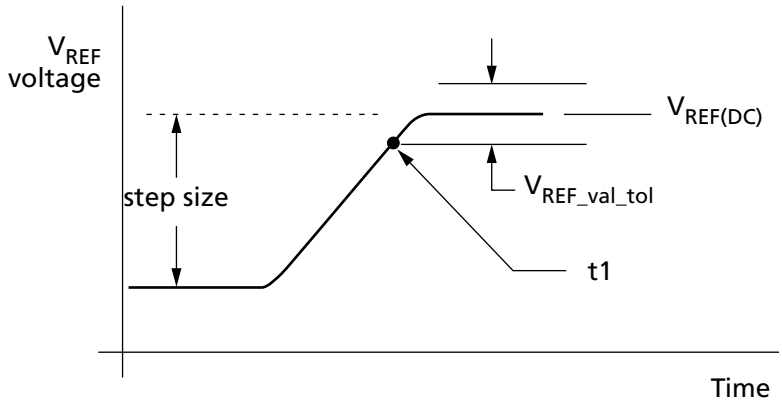

Micron Technology, Inc. reserves the right to change products or specifications without notice.
© 2017 Micron Technology, Inc. All rights reserved.

Figure 108: $V_{REF(DQ)}$ Single-Step Size Decrement

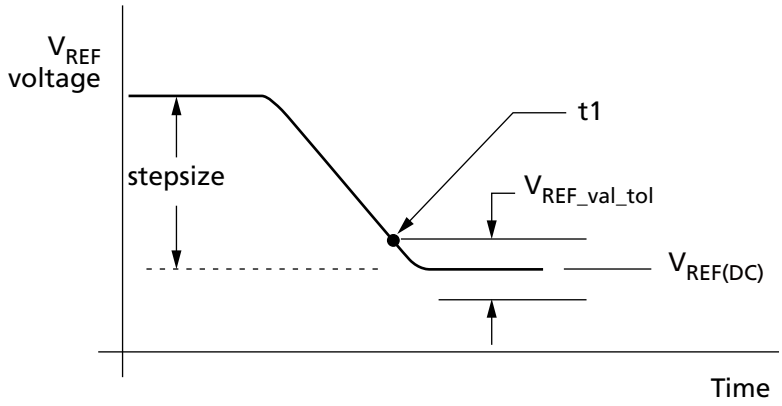

Figure 109: $V_{REF(DQ)}$ Full Step from $V_{REF,min}$ to $V_{REF,max}$

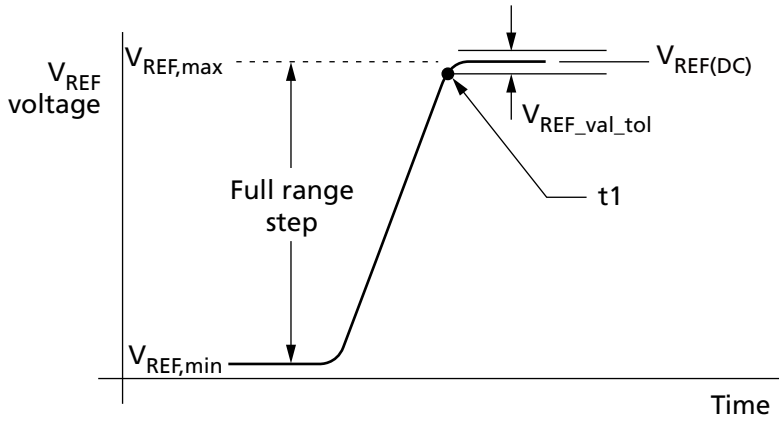

Figure 110: $V_{REF(DQ)}$ Full Step from $V_{REF,max}$ to $V_{REF,min}$

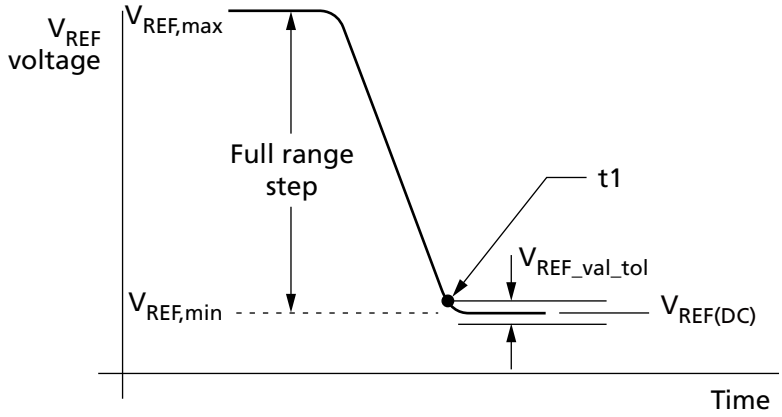

The following table contains the DQ internal V_{REF} specification that will be characterized at the component level for compliance.

Micron Technology, Inc. reserves the right to change products or specifications without notice.
© 2017 Micron Technology, Inc. All rights reserved.

Table 118: Internal $V_{REF(DQ)}$ Specifications

Symbol	Parameter	Min	Typ	Max	Unit	Notes
$V_{REF(DQ),max_r0}$	V_{REF} MAX operating point Range-0	–	–	44.9%	V_{DDQ}	1, 11
$V_{REF(DQ),min_r0}$	V_{REF} MIN operating point Range-0	15.0%	–	–	V_{DDQ}	1, 11
$V_{REF(DQ),max_r1}$	V_{REF} MAX operating point Range-1	–	–	62.9%	V_{DDQ}	1, 11
$V_{REF(DQ),min_r1}$	V_{REF} MIN operating point Range-1	32.9%	–	–	V_{DDQ}	1, 11
$V_{REF(DQ),step}$	$V_{REF(DQ)}$ step size	0.50%	0.60%	0.70%	V_{DDQ}	2
$V_{REF(DQ),set_tol}$	$V_{REF(DQ)}$ set tolerance	–11	0	11	mV	3, 4, 6
		–1.1	0	1.1	mV	3, 5, 7
${}^{t}V_{REF_}$TIME-SHORT	$V_{REF(DQ)}$ step time	–	–	100	ns	8
${}^{t}V_{REF_}$TIME-MIDDLE		–	–	200	ns	12
${}^{t}V_{REF_}$TIME-LONG		–	–	250	ns	9
${}^{t}V_{REF_time_weak}$		–	–	1	ms	13, 14
$V_{REF(DQ),val_tol}$	$V_{REF(DQ)}$ valid tolerance	–0.10%	0.00%	0.10%	V_{DDQ}	10

Notes:
1. $V_{REF(DQ)}$ DC voltage referenced to $V_{DDQ(DC)}$.
2. $V_{REF(DQ)}$ step size increment/decrement range. $V_{REF(DQ)}$ at DC level.
3. $V_{REF(DQ),new} = V_{REF(DQ),old} + n \times V_{REF(DQ),step}$; n = number of steps; if increment, use "+"; if decrement, use "–".
4. The minimum value of $V_{REF(DQ)}$ setting tolerance = $V_{REF(DQ),new}$ - 11mV. The maximum value of $V_{REF(DQ)}$ setting tolerance = $V_{REF(DQ),new}$ + 11mV. For n > 4.
5. The minimum value of $V_{REF(DQ)}$setting tolerance = $V_{REF(DQ),new}$ - 1.1mV. The maximum value of $V_{REF(DQ)}$ setting tolerance = $V_{REF(DQ),new}$ + 1.1mV. For n ≤ 4.
6. Measured by recording the minimum and maximum values of the $V_{REF(DQ)}$ output over the range, drawing a straight line between those points and comparing all other $V_{REF(DQ)}$ output settings to that line.
7. Measured by recording the minimum and maximum values of the $V_{REF(DQ)}$ output across four consecutive steps (n = 4), drawing a straight line between those points and comparing all other $V_{REF(DQ)}$ output settings to that line.
8. Time from MRW command to increment or decrement one step size for $V_{REF(DQ)}$.
9. Time from MRW command to increment or decrement $V_{REF,min}$ to $V_{REF,max}$ or $V_{REF,max}$ to $V_{REF,min}$ change across the $V_{REF(DQ)}$ Range in $V_{REF(DQ)}$ Voltage.
10. Only applicable for DRAM component level test/characterization purposes. Not applicable for normal mode of operation. V_{REF} valid is to qualify the step times which will be characterized at the component level.
11. DRAM range-0 or range-1 set by MR14 OP[6].
12. Time from MRW command to increment or decrement more than one step size up to a full range of V_{REF} voltage within the same $V_{REF(DQ)}$ range.
13. Applies when VRCG high current mode is not enabled, specified by MR13 [OP3] = 0.
14. ${}^{t}V_{REF_time_weak}$ covers all $V_{REF(DQ)}$ Range and Value change conditions are applied to ${}^{t}V_{REF_}$TIME-SHOR/MIDDLE/LONG.

Micron Technology, Inc. reserves the right to change products or specifications without notice.
© 2017 Micron Technology, Inc. All rights reserved.

Command Bus Training

Command Bus Training Mode

The command bus must be trained before enabling termination for high-frequency operation. The device provides an internal $V_{REF(CA)}$ that defaults to a level suitable for unterminated, low-frequency operation, but the $V_{REF(CA)}$ must be trained to achieve suitable receiver voltage margin for terminated, high-frequency operation.

The training mode described here centers the internal $V_{REF(CA)}$ in the CA data eye and at the same time allows for timing adjustments of the CS and CA signals to meet setup/hold requirements. Because it can be difficult to capture commands prior to training the CA inputs, the training mode described here uses a minimum of external commands to enter, train, and exit the CA bus training mode.

The die has a bond-pad (ODT_CA) but ODT_CA pin is ignored by LPDDR4X devices. CA ODT is fully controlled through MR11 and MR22. See On-Die Termination for more information.

The device uses frequency set points to enable multiple operating settings for the die. The device defaults to FSP-OP[0] at power-up, which has the default settings to operate in un-terminated, low-frequency environments. Prior to training, the termination should be enabled for one die in each channel by setting MR13 OP[6] = 1b (FSP-WR[1]) and setting all other mode register bits for FSP-OP[1] to the desired settings for high-frequency operation. Upon training entry, the device will automatically switch to FSP-OP[1] and use the high-frequency settings during training (See the Command Bus Training Entry Timing figure for more information on FSP-OP register sets). Upon training exit, the device will automatically switch back to FSP-OP[0], returning to a "known-good" state for unterminated, low-frequency operation.

To enter command bus training mode, issue a MRW-1 command followed by a MRW-2 command to set MR13 OP[0] = 1b (command bus training mode enabled).

After time ^{t}MRD, CKE may be set LOW, causing the device to switch to FSP-OP[1], and completing the entry into command bus training mode.

A status DQS_t, DQS_c, DQ, and DMI are as noted below; the DQ ODT state will be followed by FREQUENCY SET POINT function except in the case of output pins.

- DQS_t[0], DQS_c[0] become input pins for capturing DQ[6:0] levels by toggling.
- DQ[5:0] become input pins for setting $V_{REF(CA)}$ level.
- DQ[6] becomes an input pin for setting $V_{REF(CA)}$ range.
- DQ[7] and DMI[0] become input pins, and their input level is valid or floating.
- DQ[13:8] become output pins to feedback, capturing value via the command bus using the CS signal.
- DQS_t[1], DQS_c[1], DMI[1], and DQ[15:14] become output pins or are disabled, meaning the device may be driven to a valid level or may be left floating.

At time ^{t}CAENT later, the device may change its $V_{REF(CA)}$ range and value using input signals DQS_t[0], DQS_c[0], and DQ[6:0] from existing value that is set via MR12 OP[6:0]. The mapping between MR12 OP code and DQs is shown below. At least one $V_{REF(CA)}$ setting is required before proceeding to the next training step.

Micron Technology, Inc. reserves the right to change products or specifications without notice.
© 2017 Micron Technology, Inc. All rights reserved.

Table 119: Mapping MR12 Op Code and DQ Numbers

	Mapping						
MR12 OP code	OP6	OP5	OP4	OP3	OP2	OP1	OP0
DQ number	DQ6	DQ5	DQ4	DQ3	DQ2	DQ1	DQ0

The new $V_{REF(CA)}$ value must "settle" for time ^{t}VREFCA_Long before attempting to latch CA information.

Note: If DQ ODT is enabled in MR11-OP[2:0], then the SDRAM will terminate the DQ lanes during command bus training when entering $V_{REF(CA)}$ range and values on DQ[6:0].

To verify that the receiver has the correct $V_{REF(CA)}$ setting, and to further train the CA eye relative to clock (CK), values latched at the receiver on the CA bus are asynchronously output to the DQ bus.

To exit command bus training mode, drive CKE HIGH, and after time ^{t}VREFCA_Long, issue the MRW-1 command followed by the MRW-2 command to set MR13 OP[0] = 0b. After time ^{t}MRW, the device is ready for normal operation. After training exit, the device will automatically switch back to the FSP-OP registers that were in use prior to training.

Command bus training (CBT) may be executed from the idle or self refresh state. When executing CBT within the self refresh state, the device must not be in a power-down state (for example, CKE must be HIGH prior to training entry). CBT entry and exit is the same, regardless of the state from which CBT is initiated.

Training Sequence for Single-Rank Systems

The sequence example shown here assumes an initial low-frequency, non-terminating operating point training a high-frequency, terminating operating point. The **bold text** shows high-frequency instructions. Any operating point may be trained from any known good operating point.

1. Set MR13 OP[6] = 1b to enable writing to frequency set point 1 (FSP-WR[1]) (or FSP-OP[0]).
2. Write FSP-WR[1] (or FSP-WR[0]) registers for all channels to set up high-frequency operating parameters.
3. Issue MRW-1 and MRW-2 commands to enter command bus training mode.
4. Drive CKE LOW, **and change CK frequency to the high-frequency operating point.**
5. **Perform command bus training ($V_{REF(CA)}$, CS, and CA).**
6. **Exit training by driving CKE HIGH**, change CK frequency to the low-frequency operating point, and issue MRW-1 and MRW-2 commands. When CKE is driven HIGH, the device will automatically switch back to the FSP-OP registers that were in use prior to training (trained values are not retained).
7. Write the trained values to FSP-WR[1] (or FSP-WR[0]) by issuing MRW-1 and MRW-2 commands to the SDRAM and setting all applicable mode register parameters.
8. Issue MRW-1 and MRW-2 commands to switch the terminating rank to FSP-OP[1] (or FSP-OP[0]), to turn on termination, **and change CK frequency to the high-frequency operating point. At this point the command bus is trained and you may proceed to other training or normal operation.**

Micron Technology, Inc. reserves the right to change products or specifications without notice.
© 2017 Micron Technology, Inc. All rights reserved.

Training Sequence for Multiple-Rank Systems

The sequence example shown here is assuming an initial low-frequency operating point, training a high-frequency operating point. The **bold text** shows high-frequency instructions. Any operating point may be trained from any known good operating point.

1. Set MR13 OP[6] = 1b to enable writing to frequency set point 1 (FSP-WR[1]) (or FSP-WR[0]).
2. Write FSP-WR[1] (or FSP-WR[0]) registers for all channels and ranks to set up high-frequency operating parameters.
3. Read MR0 OP[7] on all channels and ranks to determine which die are terminating, signified by MR0 OP[7] = 1b.
4. Issue MRW-1 and MRW-2 commands to enter command bus training mode on the terminating rank.
5. Drive CKE LOW on the terminating rank (or all ranks), **and change CK frequency to the high-frequency operating point.**
6. **Perform command bus training on the terminating rank ($V_{REF(CA)}$, CS, and CA).**
7. **Exit training by driving CKE HIGH**, change CK frequency to the low-frequency operating point, and issue MRW-1 and MRW-2 commands to write the trained values to FSP-WR[1] (or FSP-WR[0]). When CKE is driven HIGH, the SDRAM will automatically switch back to the FSP-OP registers that were in use prior to training (trained values are not retained by the device).
8. Issue MRW-1 and MRW-2 commands to enter training mode on the non-terminating rank (but keep CKE HIGH).
9. Issue MRW-1 and MRW-2 commands to switch the terminating rank to FSP-OP[1] (or FSP-OP[0]), to turn on termination, **and change CK frequency to the high-frequency operating point.**
10. **Drive CKE LOW on the non-terminating (or all) ranks. The non-terminating rank(s) will now be using FSP-OP[1] (or FSP-OP[0]).**
11. **Perform command bus training on the non-terminating rank ($V_{REF(CA)}$, CS, and CA).**
12. **Issue MRW-1 and MRW-2 commands to switch the terminating rank to FSP-OP[0] (or FSP-OP[1]) to turn off termination.**
13. **Exit training by driving CKE HIGH on the non-terminating rank**, change CK frequency to the low-frequency operating point, and issue MRW-1 and MRW-2 commands. When CKE is driven HIGH, the device will automatically switch back to the FSP-OP registers that were in use prior to training (that is, trained values are not retained by the device).
14. Write the trained values to FSP-WR[1] (or FSP-WR[0]) by issuing MRW-1 and MRW-2 commands and setting all applicable mode register parameters.
15. Issue MRW-1 and MRW-2 commands to switch the terminating rank to FSP-OP[1] (or FSP-OP[0]), to turn on termination, **and change CK frequency to the high-frequency operating point. At this point the command bus is trained for both ranks and the user may proceed to other training or normal operation.**

Micron Technology, Inc. reserves the right to change products or specifications without notice.
© 2017 Micron Technology, Inc. All rights reserved.

Relation Between CA Input Pin and DQ Output Pin

Table 120: Mapping CA Input Pin and DQ Output Pin

	Mapping					
CA number	CA5	CA4	CA3	CA2	CA1	CA0
DQ number	DQ13	DQ12	DQ11	DQ10	DQ9	DQ8

Figure 111: Command Bus Training Mode Entry – CA Training Pattern I/O with $V_{REF(CA)}$ Value Update

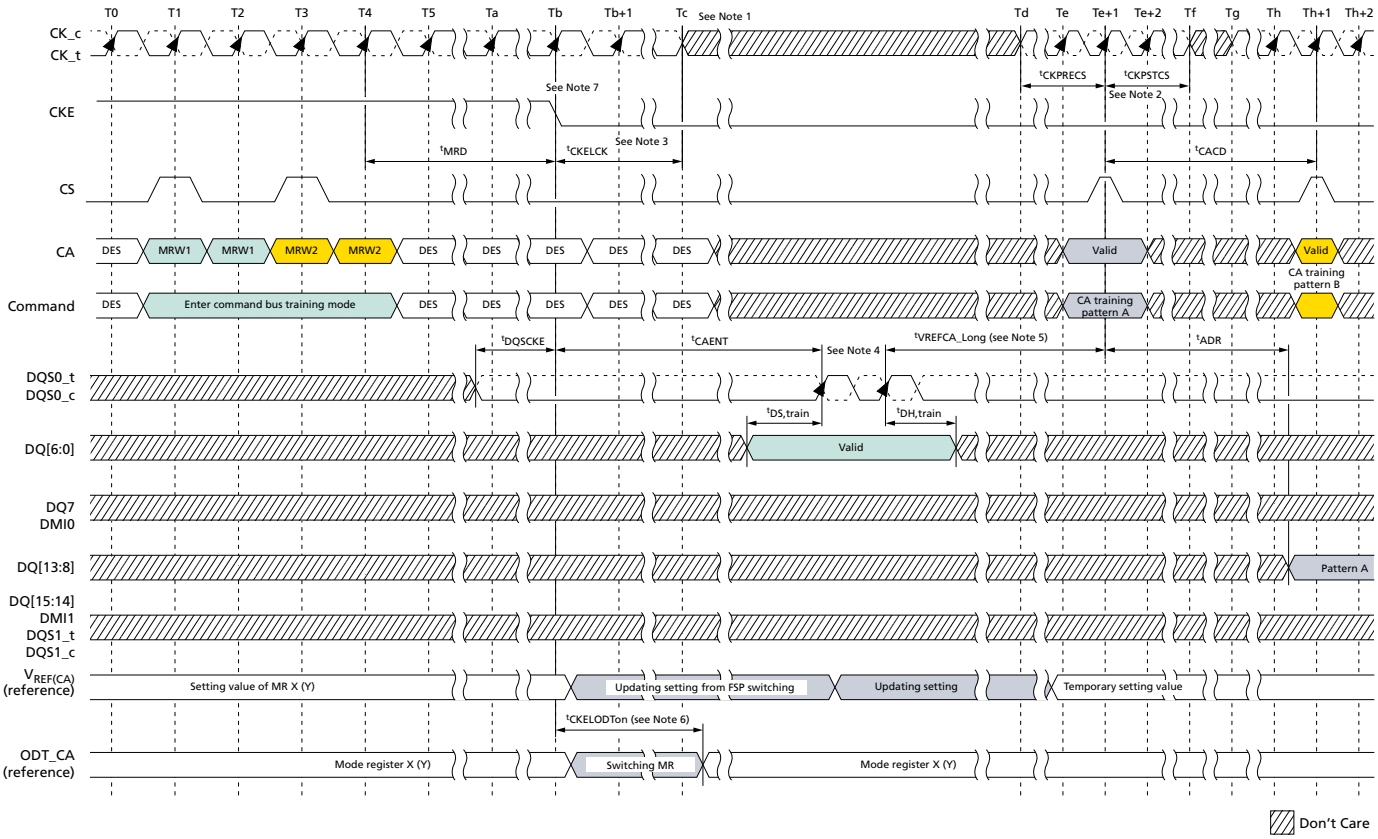

Notes:
1. After ^{t}CKELCK, the clock can be stopped or the frequency changed any time.
2. The input clock condition should be satisfied ^{t}CKPRECS and ^{t}CKPSTCS.
3. Continue to drive CK, and hold CA and CS LOW, until ^{t}CKELCK after CKE is LOW (which disables command decoding).
4. The device may or may not capture the first rising edge of DQS_t/DQS_c due to an unstable first rising edge. Therefore, at least two consecutive pulses of DQS signal input is required every for DQS input signal while capturing DQ[6:0] signals. The captured value of the DQ[6:0] signal level by each DQS edge may be overwritten at any time and the device will temporarily update the $V_{REF(CA)}$ setting of MR12 after time ^{t}VREFCA_Long.
5. ^{t}VREFCA_Long may be reduced to ^{t}VREFCA_Short if the following conditions are met: 1) The new V_{REF} setting is a single step above or below the old V_{REF} setting; 2) The DQS pulses a single time, or the new V_{REF} setting value on DQ[6:0] is static and meets ^{t}DS,train/ ^{t}DH,train for every DQS pulse applied.

Micron Technology, Inc. reserves the right to change products or specifications without notice.
© 2017 Micron Technology, Inc. All rights reserved.

6. When CKE is driven LOW, the device will switch its FSP-OP registers to use the alternate (non-active) set. For example, if the device is currently using FSP-OP[0], then it will switch to FSP-OP[1] when CKE is driven LOW. All operating parameters should be written to the alternate mode registers before entering command bus training to ensure that ODT settings, RL/WL/nWR setting, and so forth, are set to the correct values.
7. When CKE is driven LOW in command bus training mode, the device will change operation to the alternate FSP, that is, the inverse of the FSP programmed in the FSP-OP mode register.

Figure 112: Consecutive $V_{REF(CA)}$ Value Update

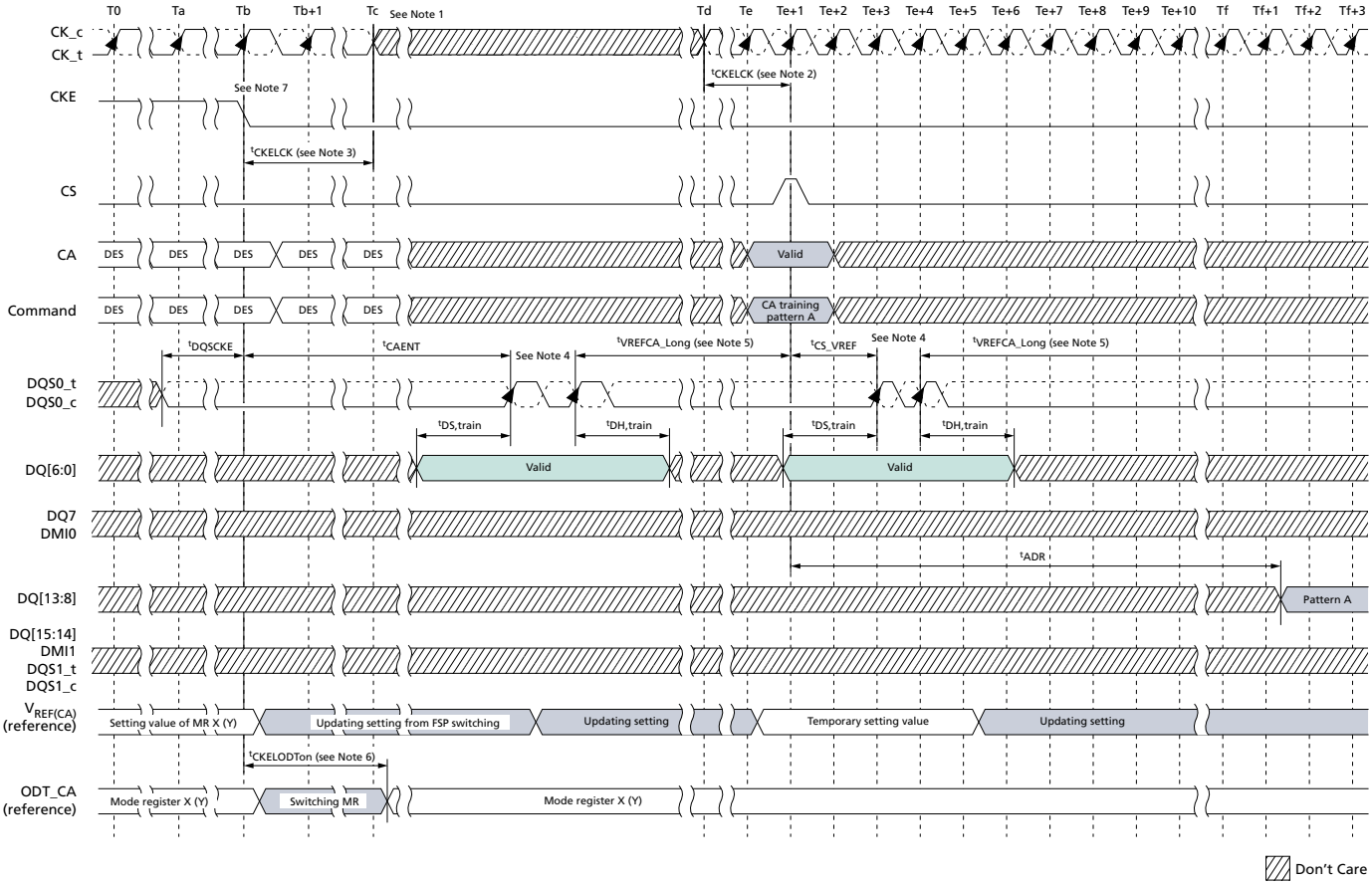

Notes:
1. After ^{t}CKELCK, the clock can be stopped or the frequency changed any time.
2. The input clock condition should be satisfied ^{t}CKPRECS and ^{t}CKPSTCS.
3. Continue to drive CK, and hold CA and CS LOW, until ^{t}CKELCK after CKE is LOW (which disables command decoding).
4. The device may or may not capture the first rising edge of DQS_t/DQS_c due to an unstable first rising edge. Therefore, at least two consecutive pulses of DQS signal input is required every for DQS input signal while capturing DQ[6:0] signals. The captured value of the DQ[6:0] signal level by each DQS edge may be overwritten at any time and the device will temporarily update the $V_{REF(CA)}$ setting of MR12 after time ^{t}VREFCA_Long.
5. ^{t}VREFCA_Long may be reduced to ^{t}VREFCA_Short if the following conditions are met: 1) The new V_{REF} setting is a single step above or below the old V_{REF} setting; 2) The DQS

Micron Technology, Inc. reserves the right to change products or specifications without notice.
© 2017 Micron Technology, Inc. All rights reserved.

pulses a single time, or the new V_{REF} setting value on DQ[6:0] is static and meets ^{t}DS,train/ ^{t}DH,train for every DQS pulse applied.

6. When CKE is driven LOW, the device will switch its FSP-OP registers to use the alternate (non-active) set. For example, if the device is currently using FSP-OP[0], then it will switch to FSP-OP[1] when CKE is driven LOW. All operating parameters should be written to the alternate mode registers before entering command bus training to ensure that ODT settings, RL/WL/nWR setting, and so forth, are set to the correct values.
7. When CKE is driven LOW in command bus training mode, the device will change operation to the alternate FSP, that is, the inverse of the FSP programmed in the FSP-OP mode register.

Figure 113: Command Bus Training Mode Exit with Valid Command

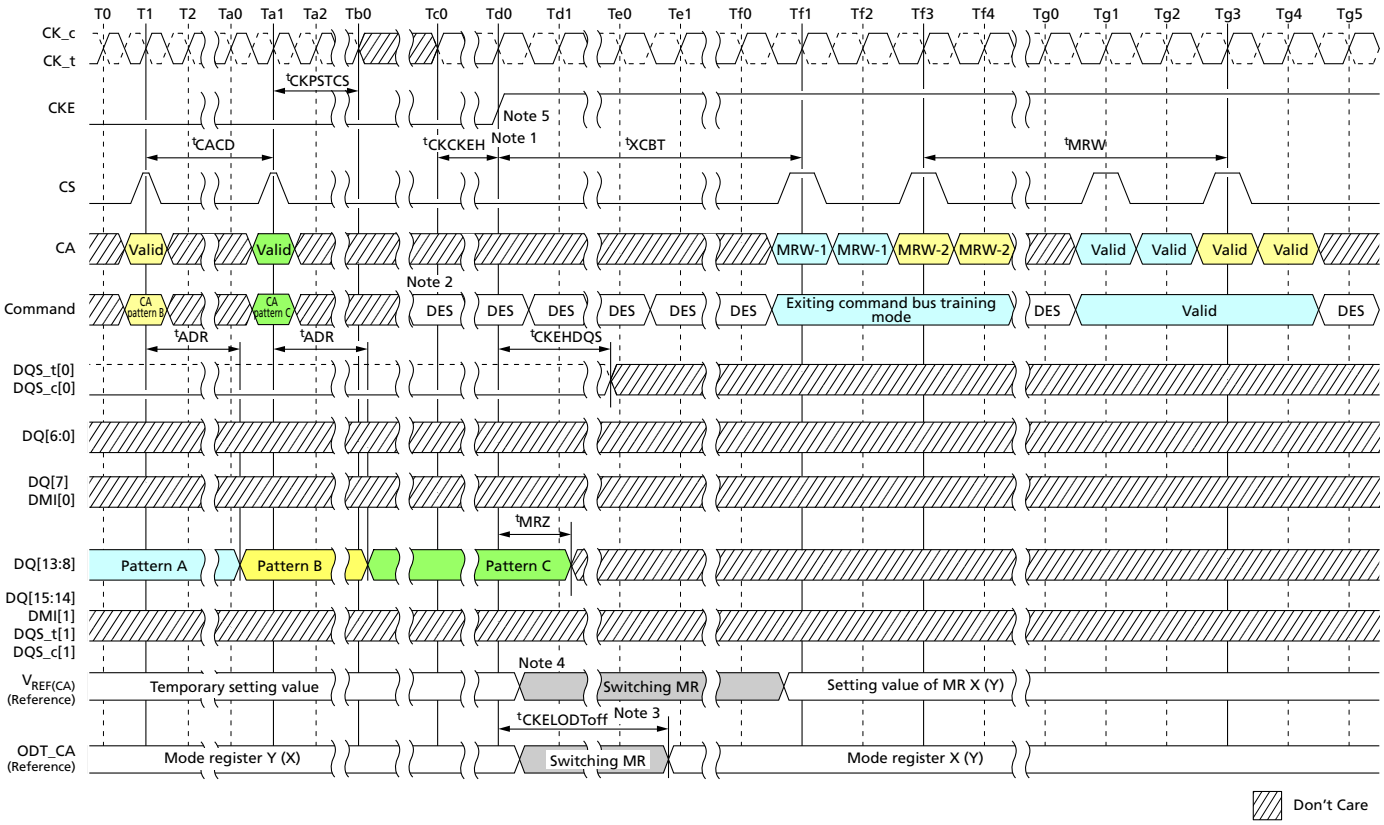

Notes:

1. The clock can be stopped or the frequency changed any time before ^{t}CKCKEH. CK must meet ^{t}CKCKEH before CKE is driven HIGH. When CKE is driven HIGH, the clock frequency must be returned to the original frequency (that is, the frequency corresponding to the FSP at command bus training mode entry.
2. CS and CA[5:0] must be deselected (LOW) ^{t}CKCKEH before CKE is driven HIGH.
3. When CKE is driven HIGH, ODT_CA will revert to the state/value defined by FSP-OP prior to command bus training mode entry, that is, the original frequency set point (FSP-OP, MR13-OP[7]). For example, if the device was using FSP-OP[1] for training, then it will switch to FSP-OP[0] when CKE is driven HIGH.
4. Training values are not retained by the device and must be written to the FSP-OP register set before returning to operation at the trained frequency. For example, $V_{REF(CA)}$ will return to the value programmed in the original set point.

Micron Technology, Inc. reserves the right to change products or specifications without notice.
© 2017 Micron Technology, Inc. All rights reserved.

5. When CKE is driven HIGH, the device will revert to the FSP in operation at command bus training mode entry.

Figure 114: Command Bus Training Mode Exit with Power-Down Entry

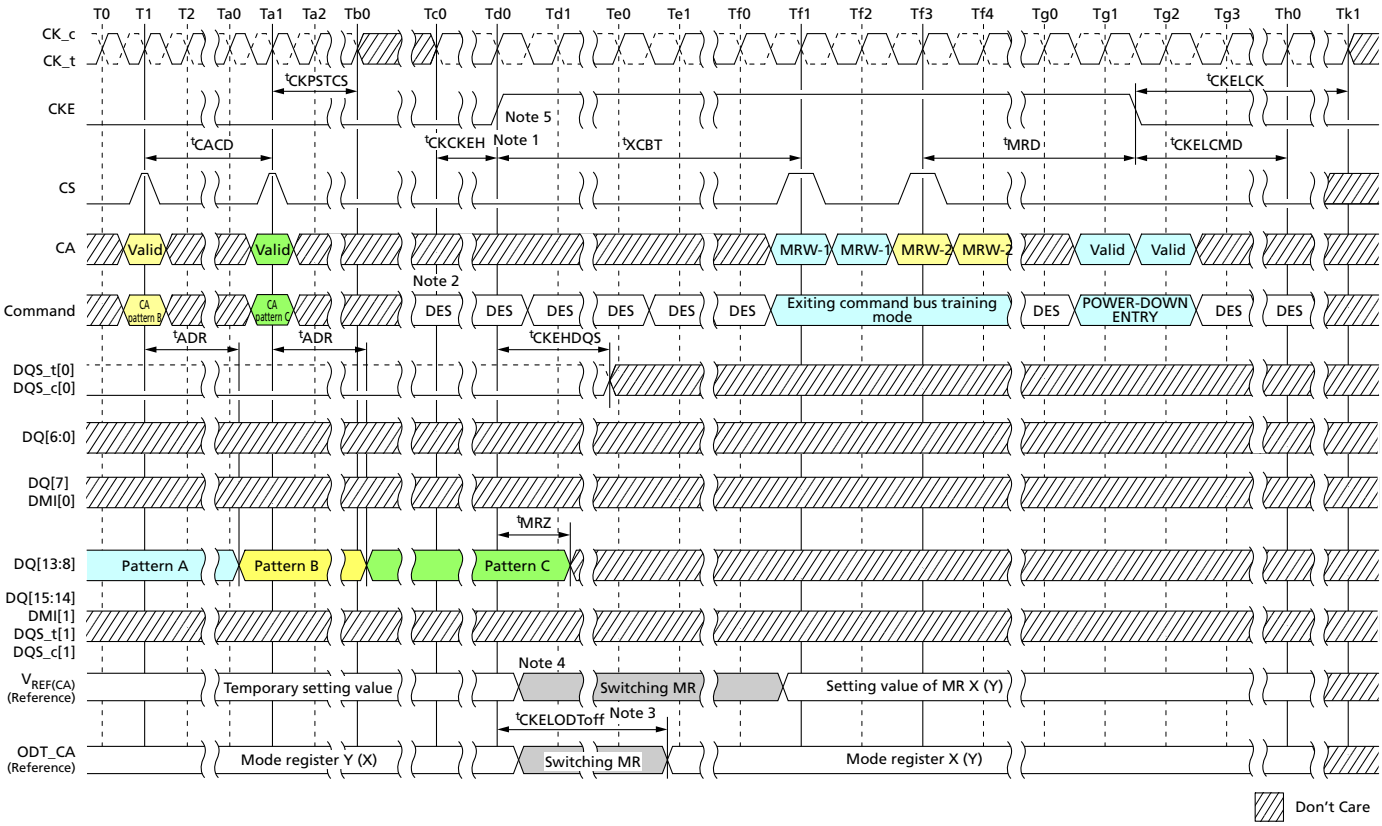

Notes:

1. The clock can be stopped or the frequency changed any time before ^{t}CKCKEH. CK must meet ^{t}CKCKEH before CKE is driven HIGH. When CKE is driven HIGH, the clock frequency must be returned to the original frequency (that is, the frequency corresponding to the FSP at command bus training mode entry.
2. CS and CA[5:0] must be deselected (LOW) ^{t}CKCKEH before CKE is driven HIGH.
3. When CKE is driven HIGH, ODT_CA will revert to the state/value defined by FSP-OP prior to command bus training mode entry, that is, the original frequency set point (FSP-OP, MR13-OP[7]). For example, if the device was using FSP-OP[1] for training, then it will switch to FSP-OP[0] when CKE is driven HIGH.
4. Training values are not retained by the device and must be written to the FSP-OP register set before returning to operation at the trained frequency. For example, $V_{REF(CA)}$ will return to the value programmed in the original set point.
5. When CKE is driven HIGH, the device will revert to the FSP in operation at command bus training mode entry.

Micron Technology, Inc. reserves the right to change products or specifications without notice.
© 2017 Micron Technology, Inc. All rights reserved.

Write Leveling

Mode Register Write-WR Leveling Mode

To improve signal-integrity performance, the device provides a write leveling feature to compensate for CK-to-DQS timing skew, affecting timing parameters such as ^{t}DQSS, ^{t}DSS, and ^{t}DSH. The memory controller uses the write leveling feature to receive feedback from the device, enabling it to adjust the clock-to-data strobe signal relationship for each DQS_t/DQS_c signal pair. The device samples the clock state with the rising edge of DQS signals and asynchronously feeds back to the memory controller. The memory controller references this feedback to adjust the clock-to-data strobe signal relationship for each DQS_t/DQS_c signal pair.

All data bits (DQ[7:0] for DQS[0] and DQ[15:8] for DQS[1]) carry the training feedback to the controller. Both DQS signals in each channel must be leveled independently. Write leveling entry/exit is independent between channels for dual-channel devices.

The device enters write leveling mode when mode register MR2-OP[7] is set HIGH. When entering write leveling mode, the state of the DQ pins is undefined. During write leveling mode, only DESELECT commands, or a MRW command to exit the WRITE LEVELING operation, are allowed. Depending on the absolute values of ^{t}QSL and ^{t}QSH in the application, the value of ^{t}DQSS may have to be better than the limits provided in the AC Timing Parameters section in order to satisfy the ^{t}DSS and ^{t}DSH specifications. Upon completion of the WRITE LEVELING operation, the device exits write leveling mode when MR2-OP[7] is reset LOW.

Write leveling should be performed before write training (DQS2DQ training).

Write Leveling Procedure

1. Enter write leveling mode by setting MR2-OP[7]=1.
2. Once in write leveling mode, DQS_t must be driven LOW and DQS_c HIGH after a delay of ^{t}WLDQSEN.
3. Wait for a time ^{t}WLDQSEN before providing the first DQS signal input. The delay time ^{t}WLMRD(MAX) is controller-dependent.
4. The device may or may not capture the first rising edge of DQS_t due to an unstable first rising edge; therefore, at least two consecutive pulses of DQS signal input is required for every DQS input signal during write training mode. The captured clock level for each DQS edge is overwritten, and the device provides asynchronous feedback on all DQ bits after time ^{t}WLO.
5. The feedback provided by the device is referenced by the controller to increment or decrement the DQS_t and/or DQS_c delay settings.
6. Repeat steps 4 and 5 until the proper DQS_t/DQS_c delay is established.
7. Exit write leveling mode by setting MR2-OP[7] = 0.

Micron Technology, Inc. reserves the right to change products or specifications without notice.
© 2017 Micron Technology, Inc. All rights reserved.

Figure 115: Write Leveling Timing – ^{t}DQSL(MAX)

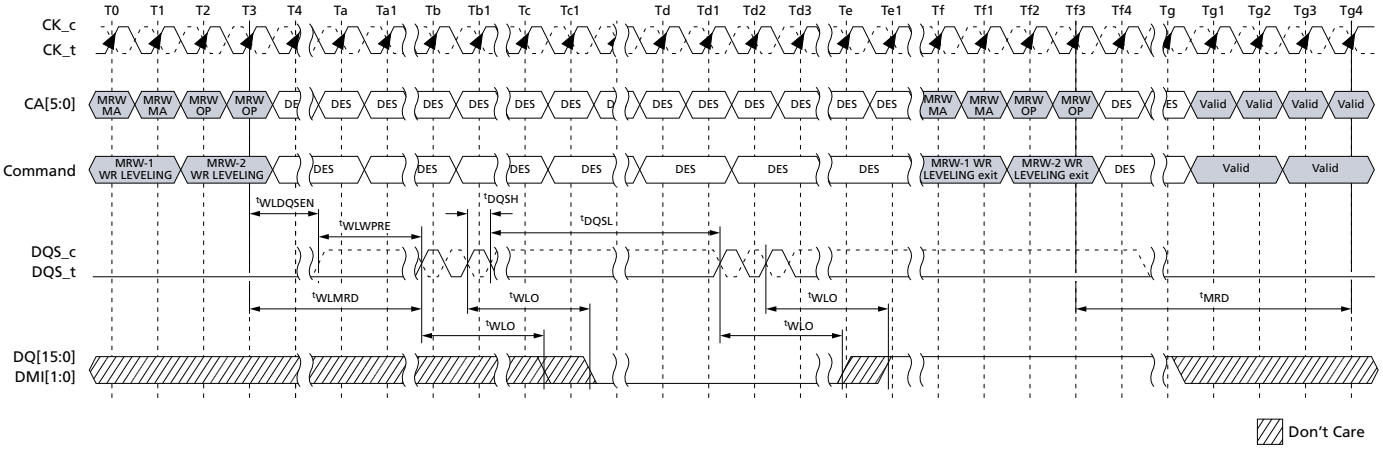

Note: 1. Clock can be stopped except during DQS toggle period (CK_t = LOW, CK_c = HIGH). However, a stable clock prior to sampling is required to ensure timing accuracy.

Figure 116: Write Leveling Timing – ^{t}DQSL(MIN)

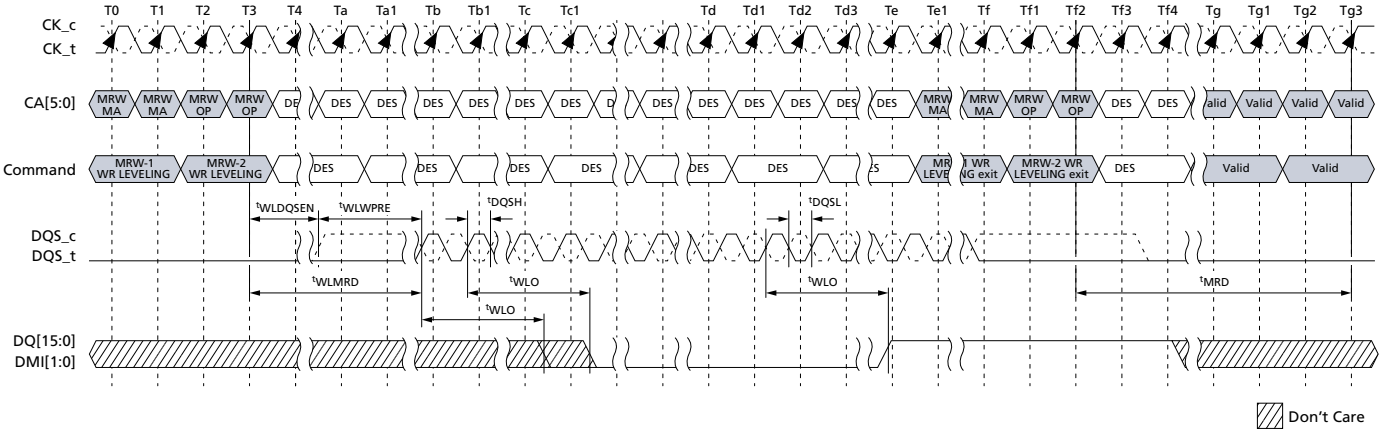

Note: 1. Clock can be stopped except during DQS toggle period (CK_t = LOW, CK_c = HIGH). However, a stable clock prior to sampling is required to ensure timing accuracy.

Input Clock Frequency Stop and Change

The input clock frequency can be stopped or changed from one stable clock rate to another stable clock rate during write leveling mode. The frequency stop or change timing is shown below.

Micron Technology, Inc. reserves the right to change products or specifications without notice.
© 2017 Micron Technology, Inc. All rights reserved.

Figure 117: Clock Stop and Timing During Write Leveling

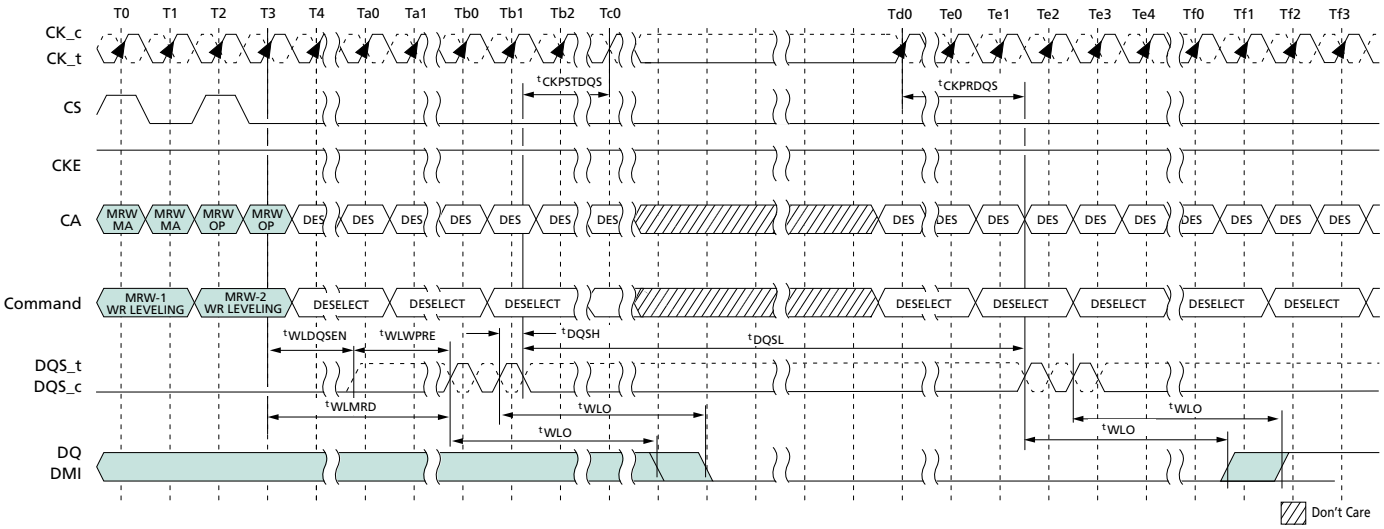

Notes: 1. CK_t is held LOW and CK_c is held HIGH during clock stop.
2. CS will be held LOW during clock stop.

Table 121: Write Leveling Timing Parameters

Parameter	Symbol	Min/Max	Value	Units
DQS_t/DQS_c delay after write leveling mode is programmed	^{t}WLDQSEN	MIN	20	^{t}CK
		MAX	–	
Write preamble for write leveling	^{t}WLWPRE	MIN	20	^{t}CK
		MAX	–	
First DQS_t/DQS_c edge after write leveling mode is programmed	^{t}WLMRD	MIN	40	^{t}CK
		MAX	–	
Write leveling output delay	^{t}WLO	MIN	0	ns
		MAX	20	
MODE REGISTER SET command delay	^{t}MRD	Refer to Mode Register Timing Parameter Table		
Valid clock requirement before DQS toggle	^{t}CKPRDQS	MIN	MAX(7.5ns, 4*n*CK)	–
		MAX	–	
Valid clock requirement after DQS toggle	^{t}CKPSTDQS	MIN	MAX(7.5ns, 4*n*CK)	–
		MAX	–	

Table 122: Write Leveling Setup and Hold Timing

Parameter	Symbol	Min/Max	Data Rate					Unit
			1600	2400	3200	3733	4267	
Write leveling hold time	^{t}WLH	MIN	150	100	75	62.5	50	ps
Write leveling setup time	^{t}WLS	MIN	150	100	75	62.5	50	ps

Micron Technology, Inc. reserves the right to change products or specifications without notice.
© 2017 Micron Technology, Inc. All rights reserved.

Table 122: Write Leveling Setup and Hold Timing (Continued)

Parameter	Symbol	Min/Max	Data Rate					Unit
			1600	2400	3200	3733	4267	
Write leveling input valid window	^{t}WLIVW	MIN	240	160	120	105	90	ps

Notes:
1. In addition to the traditional setup and hold time specifications, there is value in a invalid window-based specification for write leveling training. As the training is based on each device, worst case process skews for setup and hold do not make sense to close timing between CK and DQS.
2. ^{t}WLIVW is defined in a similar manner to TdIVW_total, except that here it is a DQS invalid window with respect to CK. This would need to account for all voltage and temperature (VT) drift terms between CK and DQS within the device that affect the write leveling invalid window.

The figure below shows the DQS input mask for timing with respect to CK. The "total" mask (^{t}WLIVW) defines the time the input signal must not encroach in order for the DQS input to be successfully captured by CK. The mask is a receiver property and it is not the valid data-eye.

Figure 118: DQS_t/DQS_c to CK_t/CK_c Timings at the Pins Referenced from the Internal Latch

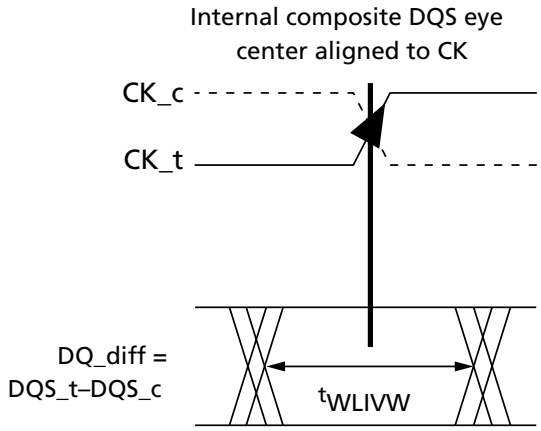

Micron Technology, Inc. reserves the right to change products or specifications without notice.
© 2017 Micron Technology, Inc. All rights reserved.

MULTIPURPOSE Operation

The device uses the MULTIPURPOSE command to issue a NO OPERATION (NOP) command and to access various training modes. The MPC command is initiated with CS, and CA[5:0] asserted to the proper state at the rising edge of CK, as defined by the Command Truth Table. The MPC command has seven operands (OP[6:0]) that are decoded to execute specific commands in the SDRAM. OP[6] is a special bit that is decoded on the first rising CK edge of the MPC command. When OP[6] = 0, the device executes a NOP command, and when OP[6] = 1, the device further decodes one of several training commands.

When OP[6] = 1 and the training command includes a READ or WRITE operation, the MPC command must be followed immediately by a CAS-2 command. For training commands that read or write, READ latency (RL) and WRITE latency (WL) are counted from the second rising CK edge of the CAS-2 command with the same timing relationship as a typical READ or WRITE command. The operands of the CAS-2 command following a MPC READ/WRITE command must be driven LOW. The following MPC commands must be followed by a CAS-2 command:

- WRITE-FIFO
- READ-FIFO
- READ DQ CALIBRATION

All other MPC commands do not require a CAS-2 command, including the following:

- NOP
- START DQS INTERVAL OSCILLATOR
- STOP DQS INTERVAL OSCILLATOR
- ZQCAL START (ZQ CALIBRATION START)
- ZQCAL LATCH (ZQ CALIBRATION LATCH)

Table 123: MPC Command Definition

SDR Command	SDR Command Pins			SDR CA Pins						CK_t Edge	Notes
	CKE		CS								
	CK_t (n-1)	CK_t(n)		CA0	CA1	CA2	CA3	CA4	CA5		
MPC (Train, NOP)	H	H	H	L	L	L	L	L	OP6	↑1	1, 2
			L	OP0	OP1	OP2	OP3	OP4	OP5	↑2	

Notes: 1. See the Command Truth Table for more information.
2. MPC commands for READ or WRITE TRAINING operations must be immediately followed by the CAS-2 command, consecutively, without any other commands in between. The MPC command must be issued before issuing the CAS-2 command.

Micron Technology, Inc. reserves the right to change products or specifications without notice.
© 2017 Micron Technology, Inc. All rights reserved.

Table 124: MPC Commands

Function	Operand	Data
Training Modes	OP[6:0]	**0XXXXXXb:** NOP **1000001b:** READ-FIFO: READ-FIFO supports only BL16 operation **1000011b:** READ DQ CALIBRATION (MR32/MR40) **1000101b:** RFU **1000111b:** WRITE-FIFO: WRITE-FIFO supports only BL16 operation **1001001b:** RFU **1001011b:** START DQS OSCILLATOR **1001101b:** STOP DQS OSCILLATOR **1001111b:** ZQCAL START **1010001b:** ZQCAL LATCH **All Others:** Reserved

Notes:
1. See command truth table for more information.
2. MPC commands for READ or WRITE TRAINING operations must be immediately followed by CAS-2 command consecutively without any other commands in-between. MPC command must be issued first before issuing the CAS-2 command.
3. WRITE-FIFO and READ-FIFO commands will only operate as BL16, ignoring the burst length selected by MR1 OP[1:0].

Figure 119: WRITE-FIFO – ^{t}WPRE = 2*n*CK, ^{t}WPST = 0.5*n*CK

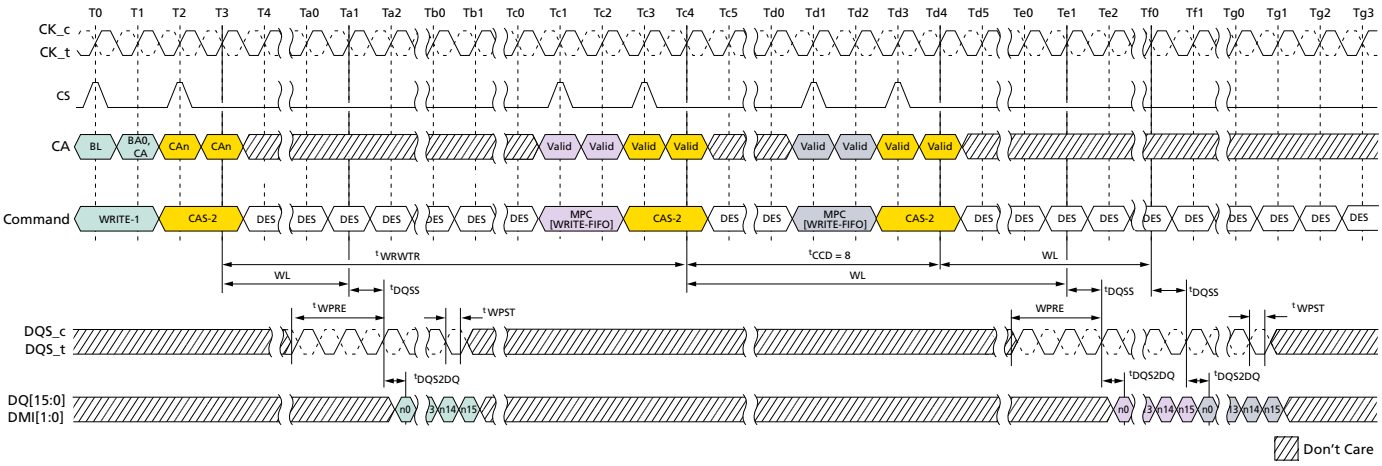

Notes:
1. MPC[WRITE-FIFO] can be executed with a single bank or multiple banks active, during refresh or during self refresh, with CKE HIGH.
2. Write-1 to MPC is shown as an example of command-to-command timing for MPC. Timing from Write-1 to MPC[WRITE-FIFO] is ^{t}WRWTR.
3. Seamless MPC[WRITE-FIFO] commands may be executed by repeating the command every ^{t}CCD time.
4. MPC[WRITE-FIFO] uses the same command-to-data timing relationship (WL, ^{t}DQSS, ^{t}DQS2DQ) as a WRITE-1 command.
5. A maximum of five MPC[WRITE-FIFO] commands may be executed consecutively without corrupting FIFO data. The sixth MPC[WRITE-FIFO] command will overwrite the FIFO data

Micron Technology, Inc. reserves the right to change products or specifications without notice.
© 2017 Micron Technology, Inc. All rights reserved.

from the first command. If fewer than five MPC[WRITE-FIFO] commands are executed, then the remaining FIFO locations will contain undefined data.

6. For the CAS-2 command following an MPC command, the CAS-2 operands must be driven LOW.
7. To avoid corrupting the FIFO contents, MPC[READ-FIFO] must immediately follow MPC[WRITE-FIFO]/CAS-2 without any other commands in-between. See Write Training section for more information on FIFO pointer behavior.

Figure 120: READ-FIFO – ^{t}WPRE = 2*n*CK, ^{t}WPST = 0.5*n*CK, ^{t}RPRE = Toggling, ^{t}RPST = 1.5*n*CK

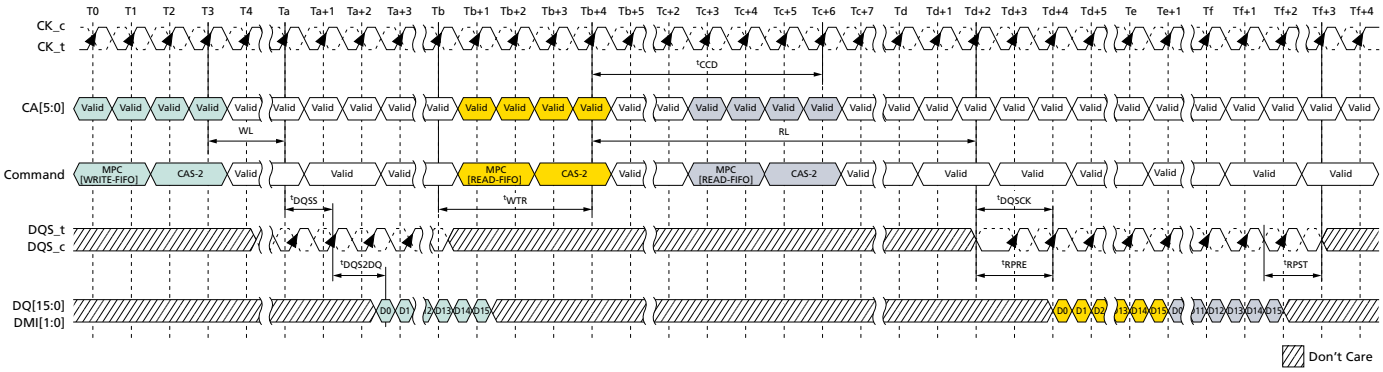

Notes:

1. MPC[WRITE-FIFO] can be executed with a single bank or multiple banks active, during refresh or during self refresh with CKE HIGH.
2. Seamless MPC[READ-FIFO] commands may be executed by repeating the command every ^{t}CCD time.
3. MPC[READ-FIFO] uses the same command-to-data timing relationship (RL, ^{t}DQSCK) as a READ-1 command.
4. Data may be continuously read from the FIFO without any data corruption. After five MPC[READ-FIFO] commands, the FIFO pointer will wrap back to the first FIFO and continue advancing. If fewer than five MPC[WRITE-FIFO] commands were executed, then the MPC[READ-FIFO] commands to those FIFO locations will return undefined data. See Write Training for more information on the FIFO pointer behavior.
5. For the CAS-2 command immediately following an MPC command, the CAS-2 operands must be driven LOW.
6. DMI[1:0] signals will be driven if WR-DBI, RD-DBI, or DM is enabled in the mode registers. See Write Training for more information on DMI behavior.

Micron Technology, Inc. reserves the right to change products or specifications without notice.
© 2017 Micron Technology, Inc. All rights reserved.

Figure 121: READ-FIFO – ^{t}RPRE = Toggling, ^{t}RPST = 1.5*n*CK

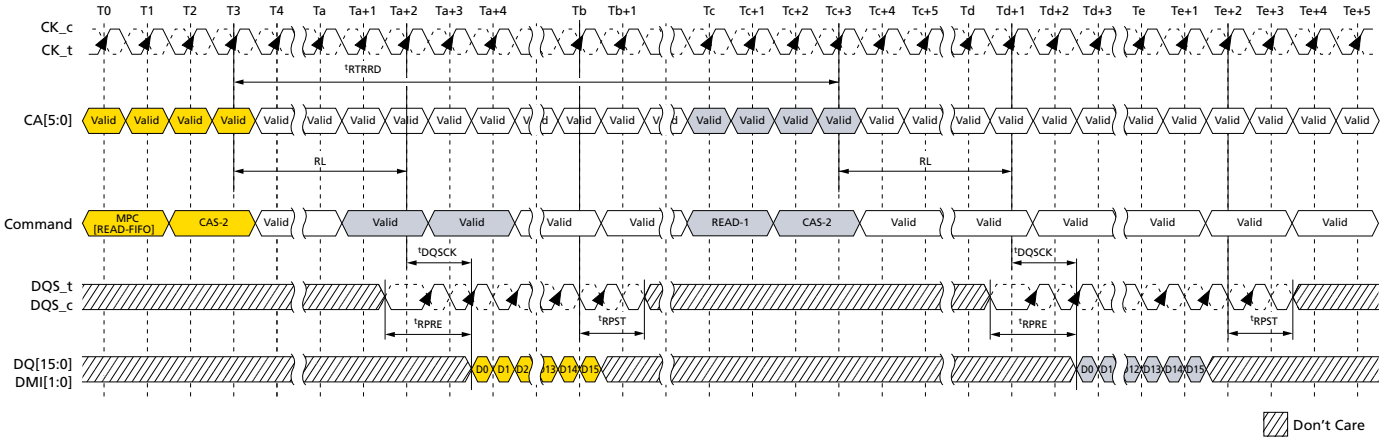

Notes:
1. MPC[WRITE-FIFO] can be executed with a single bank or multiple banks active, during refresh or during self refresh with CKE HIGH.
2. MPC[READ-FIFO] to READ-1 operation is shown as an example of command-to-command timing for MPC. Timing from MPC[READ-FIFO] command to read is ^{t}RTRRD.
3. Seamless MPC[READ-FIFO] commands may be executed by repeating the command every ^{t}CCD time.
4. MPC[READ-FIFO] uses the same command-to-data timing relationship (RL, ^{t}DQSCK) as a READ-1 command.
5. Data may be continuously read from the FIFO without any data corruption. After five MPC[READ-FIFO] commands, the FIFO pointer will wrap back to the first FIFO and continue advancing. If fewer than five MPC[WRITE-FIFO] commands are executed, then the MPC[READ-FIFO] commands to those FIFO locations will return undefined data. See Write Training for more information on the FIFO pointer behavior.
6. For the CAS-2 command immediately following an MPC command, the CAS-2 operands must be driven LOW.
7. DMI[1:0] signals will be driven if WR-DBI, RD-DBI, or DM is enabled in the mode registers. See Write Training for more information on DMI behavior.

Table 125: Timing Constraints for Training Commands

Previous Command	Next Command	Minimum Delay	Unit	Notes
WR/MWR	MPC[WRITE-FIFO]	^{t}WRWTR	*n*CK	1
	MPC[READ-FIFO]	Not allowed	–	2
	MPC[READ DQ CALIBRATION]	WL + RU(^{t}DQSS(MAX)/^{t}CK) + BL/2 + RU(^{t}WTR/^{t}CK)	*n*CK	
RD/MRR	MPC[WRITE-FIFO]	^{t}RTRRD	*n*CK	3
	MPC[READ-FIFO]	Not allowed	–	2
	MPC[READ DQ CALIBRATION]	^{t}RTRRD	*n*CK	3

Micron Technology, Inc. reserves the right to change products or specifications without notice.
© 2017 Micron Technology, Inc. All rights reserved.

Table 125: Timing Constraints for Training Commands (Continued)

Previous Command	Next Command	Minimum Delay	Unit	Notes
MPC[WRITE-FIFO]	WR/MWR	Not allowed	–	2
	MPC[WRITE-FIFO]	^{t}CCD	*n*CK	
	RD/MRR	Not allowed	–	2
	MPC[READ-FIFO]	WL + RU(^{t}DQSS(MAX)/^{t}CK) + BL/2 + RU(^{t}WTR/^{t}CK)	*n*CK	
	MPC[READ DQ CALIBRATION]	Not allowed	–	2
MPC[READ-FIFO]	WR/MWR	^{t}RTRRD	*n*CK	3
	MPC[WRITE-FIFO]	^{t}RTW	*n*CK	4
	RD/MRR	^{t}RTRRD	*n*CK	3
	MPC[READ-FIFO]	^{t}CCD	*n*CK	
	MPC[READ DQ CALIBRATION]	^{t}RTRRD	*n*CK	3
MPC[READ DQ CALIBRATION]	WR/MWR	^{t}RTRRD	*n*CK	3
	MPC[WRITE-FIFO]	^{t}RTRRD	*n*CK	3
	RD/MRR	^{t}RTRRD	*n*CK	3
	MPC[READ-FIFO]	Not allowed	–	2
	MPC[READ DQ CALIBRATION]	^{t}CCD	*n*CK	

Notes:
1. ^{t}WRWTR = WL + BL/2 + RU(^{t}DQSS(MAX)/^{t}CK) + MAX(RU(7.5ns/^{t}CK), 8*n*CK).
2. No commands are allowed between MPC[WRITE-FIFO] and MPC[READ-FIFO] except the MRW commands related to training parameters.
3. ^{t}RTRRD = RL + RU(^{t}DQSCK(MAX)/^{t}CK) + BL/2 + RD(^{t}RPST) + MAX(RU(7.5ns/^{t}CK), 8*n*CK).
4. In case of DQ ODT disable MR11 OP[2:0] = 000b,

   ^{t}RTW = RL + RU(^{t}DQSCK(MAX)/^{t}CK) + BL/2 - WL + ^{t}WPRE + RD(^{t}RPST).

   In case of DQ ODT enable MR11 OP[2:0] ≠ 000b,

   ^{t}RTW = RL + RU(^{t}DQSCK(MAX)/^{t}CK) + BL/2 + RD(^{t}RPST) - ODTLon - RD(^{t}ODTon(MIN)/^{t}CK) + 1.

Micron Technology, Inc. reserves the right to change products or specifications without notice.
© 2017 Micron Technology, Inc. All rights reserved.

Read DQ Calibration Training

The READ DQ CALIBRATION TRAINING function outputs a 16-bit, user-defined pattern on the DQ pins. Read DQ calibration is initiated by issuing a MPC[READ DQ CALIBRATION] command followed by a CAS-2 command, which causes the device to drive the contents of MR32, followed by the contents of MR40 on each of DQ[15:0] and DMI[1:0]. The pattern can be inverted on selected DQ pins according to user-defined invert masks written to MR15 and MR20.

Read DQ Calibration Training Procedure

1. Issue MRW commands to write MR32 (first eight bits), MR40 (second eight bits), MR15 (eight-bit invert mask for byte 0), and MR20 (eight-bit invert mask for byte 1).
   In the alternative, this step could be replaced with the default pattern:
   - MR32 default = 5Ah
   - MR40 default = 3Ch
   - MR15 default = 55h
   - MR20 default = 55h
2. Issue an MPC command, followed immediately by a CAS-2 command.
   - Each time an MPC command, followed by a CAS-2, is received by the device, a 16-bit data burst will drive the eight bits programmed in MR32 followed by the eight bits programmed in MR40 on all I/O pins after the currently set RL.
   - The data pattern will be inverted for I/O pins with a 1 programmed in the corresponding invert mask mode register bit (see table below).
   - The pattern is driven on the DMI pins, but no DATA BUS INVERSION function is enabled, even if read DBI is enabled in the mode register.
   - The MPC command can be issued every ^{t}CCD seamlessly, and ^{t}RTRRD delay is required between ARRAY READ command and the MPC command as well the delay required between the MPC command and an ARRAY READ.
   - The operands received with the CAS-2 command must be driven LOW.
3. DQ

   Read DQ calibration training can be performed with any or no banks active during refresh or during self refresh with CKE HIGH.

Table 126: Invert Mask Assignments

DQ pin	0	1	2	3	DMI0	4	5	6	7
MR15 bit	0	1	2	3	N/A	4	5	6	7
DQ pin	8	9	10	11	DMI1	12	13	14	15
MR20 bit	0	1	2	3	N/A	4	5	6	7

Micron Technology, Inc. reserves the right to change products or specifications without notice.
© 2017 Micron Technology, Inc. All rights reserved.

Figure 122: Read DQ Calibration Training Timing: Read-to-Read DQ Calibration

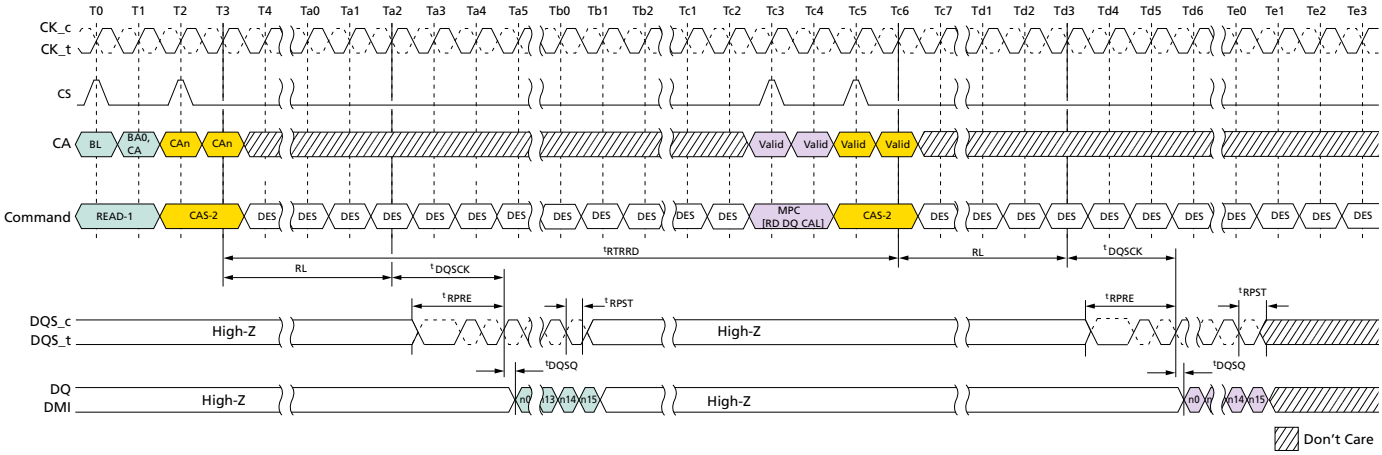

Notes:
1. Read-1 to MPC operation is shown as an example of command-to-command timing. Timing from Read-1 to MPC command is ^{t}RTRRD.
2. MPC uses the same command-to-data timing relationship (RL, ^{t}DQSCK, ^{t}DQSQ) as a Read-1 command.
3. BL = 16, Read preamble: Toggle, Read postamble: 0.5*n*CK.
4. DES commands are shown for ease of illustration; other commands may be valid at these times.

Figure 123: Read DQ Calibration Training Timing: Read DQ Calibration to Read DQ Calibration/Read

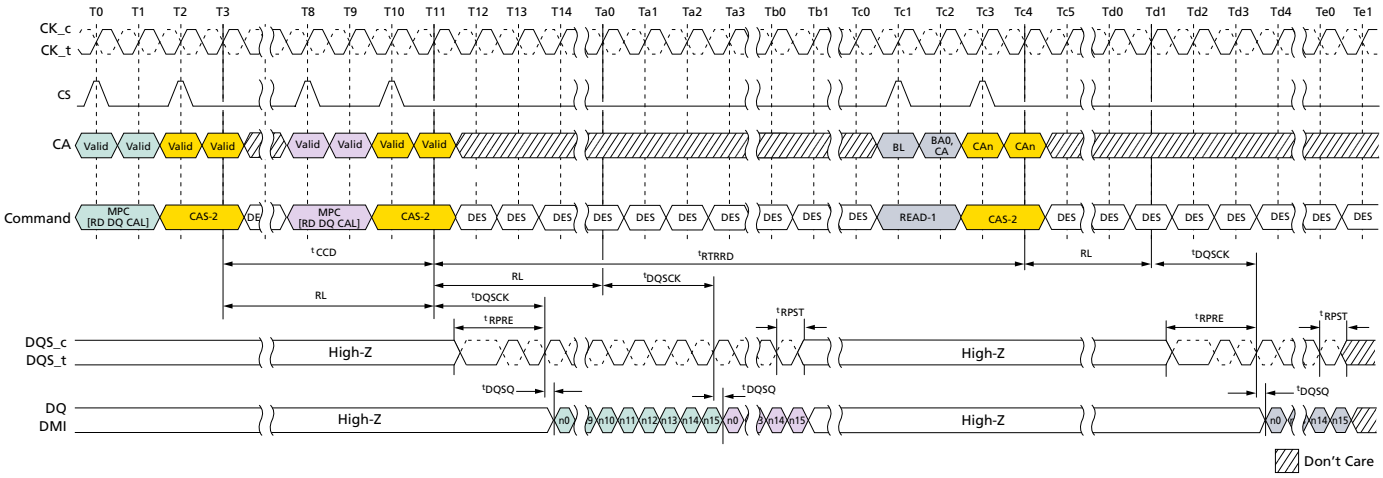

Notes:
1. MPC[READ DQ CALIBRATION] to MPC[READ DQ CALIBRATION] operation is shown as an example of command-to-command timing.
2. MPC[READ DQ CALIBRATION] to READ-1 operation is shown as an example of command-to-command timing.
3. MPC[READ DQ CALIBRATION] uses the same command-to-data timing relationship (RL, ^{t}DQSCK, ^{t}DQSQ) as a READ-1 command.
4. Seamless MPC[READ DQ CALIBRATION] commands may be executed by repeating the command every ^{t}CCD time.
5. Timing from MPC[READ DQ CALIBRATION] command to READ-1 is ^{t}RTRRD.

Micron Technology, Inc. reserves the right to change products or specifications without notice.
© 2017 Micron Technology, Inc. All rights reserved.

6. BL = 16, Read preamble: Toggle, Read postamble: 0.5*n*CK.
7. DES commands are shown for ease of illustration; other commands may be valid at these times.

Read DQ Calibration Training Example

An example of read DQ calibration training output is shown in table below. This shows the 16-bit data pattern that will be driven on each DQ in byte 0 when one READ DQ CALIBRATION TRAINING command is executed. This output assumes the following mode register values are used:

- MR32 = 1CH
- MR40 = 59H
- MR15 = 55H
- MR20 = 55H

Table 127: Read DQ Calibration Bit Ordering and Inversion Example

	Bit Sequence →																
Pin	**Invert**	**15**	**14**	**13**	**12**	**11**	**10**	**9**	**8**	**7**	**6**	**5**	**4**	**3**	**2**	**1**	**0**
DQ0	Yes	1	0	1	0	0	1	1	0	1	1	1	0	0	0	1	1
DQ1	No	0	1	0	1	1	0	0	1	0	0	0	1	1	1	0	0
DQ2	Yes	1	0	1	0	0	1	1	0	1	1	1	0	0	0	1	1
DQ3	No	0	1	0	1	1	0	0	1	0	0	0	1	1	1	0	0
DMI0	Never	0	1	0	1	1	0	0	1	0	0	0	1	1	1	0	0
DQ4	Yes	1	0	1	0	0	1	1	0	1	1	1	0	0	0	1	1
DQ5	No	0	1	0	1	1	0	0	1	0	0	0	1	1	1	0	0
DQ6	Yes	1	0	1	0	0	1	1	0	1	1	1	0	0	0	1	1
DQ7	No	0	1	0	1	1	0	0	1	0	0	0	1	1	1	0	0
DQ8	Yes	1	0	1	0	0	1	1	0	1	1	1	0	0	0	1	1
DQ9	No	0	1	0	1	1	0	0	1	0	0	0	1	1	1	0	0
DQ10	Yes	1	0	1	0	0	1	1	0	1	1	1	0	0	0	1	1
DQ11	No	0	1	0	1	1	0	0	1	0	0	0	1	1	1	0	0
DMI1	Never	0	1	0	1	1	0	0	1	0	0	0	1	1	1	0	0
DQ12	Yes	1	0	1	0	0	1	1	0	1	1	1	0	0	0	1	1
DQ13	No	0	1	0	1	1	0	0	1	0	0	0	1	1	1	0	0
DQ14	Yes	1	0	1	0	0	1	1	0	1	1	1	0	0	0	1	1
DQ15	No	0	1	0	1	1	0	0	1	0	0	0	1	1	1	0	0

Notes:
1. The patterns contained in MR32 and MR40 are transmitted on DQ[15:0] and DMI[1:0] when read DQ calibration is initiated via a MPC[READ DQ CALIBRATION] command. The pattern transmitted serially on each data lane, organized little endian such that the low-order bit in a byte is transmitted first. If the data pattern is 27H, then the first bit transmitted with be a 1, followed by 1, 1, 0, 0, 1, 0, and 0. The bit stream will be 00100111 →.
2. MR15 and MR20 may be used to invert the MR32/MR40 data pattern on the DQ pins. See MR15 and MR20 for more information. Data is never inverted on the DMI[1:0] pins.
3. DMI [1:0] outputs status follows MR Setting vs. DMI Status table.

Micron Technology, Inc. reserves the right to change products or specifications without notice.
© 2017 Micron Technology, Inc. All rights reserved.

4. No DATA BUS INVERSION (DBI) function is enacted during read DQ calibration, even if DBI is enabled in MR3-OP[6].

Table 128: MR Setting vs. DMI Status

DM Function MR13 OP[5]	WRITE DBIdc Function MR3 OP[7]	READ DBIdc Function MR3 OP[6] DMI	Status
1: Disable	0: Disable	0: Disable	High-Z
1: Disable	1: Enable	0: Disable	The data pattern is transmitted
1: Disable	0: Disable	1: Enable	The data pattern is transmitted
1: Disable	1: Enable	1: Enable	The data pattern is transmitted
0: Enable	0: Disable	0: Disable	The data pattern is transmitted
0: Enable	1: Enable	0: Disable	The data pattern is transmitted
0: Enable	0: Disable	1: Enable	The data pattern is transmitted
0: Enable	1: Enable	1: Enable	The data pattern is transmitted

MPC[READ DQ CALIBRATION] After Power-Down Exit

Following the power-down state, an additional time, ^{t}MRRI, is required prior to issuing the MPC[READ DQ CALIBRATION] command. This additional time (equivalent to ^{t}RCD) is required in order to be able to maximize power-down current savings by allowing more power-up time for the read DQ data in MR32 and MR40 data path after exit from standby, power-down mode.

Figure 124: MPC[READ DQ CALIBRATION] Following Power-Down State

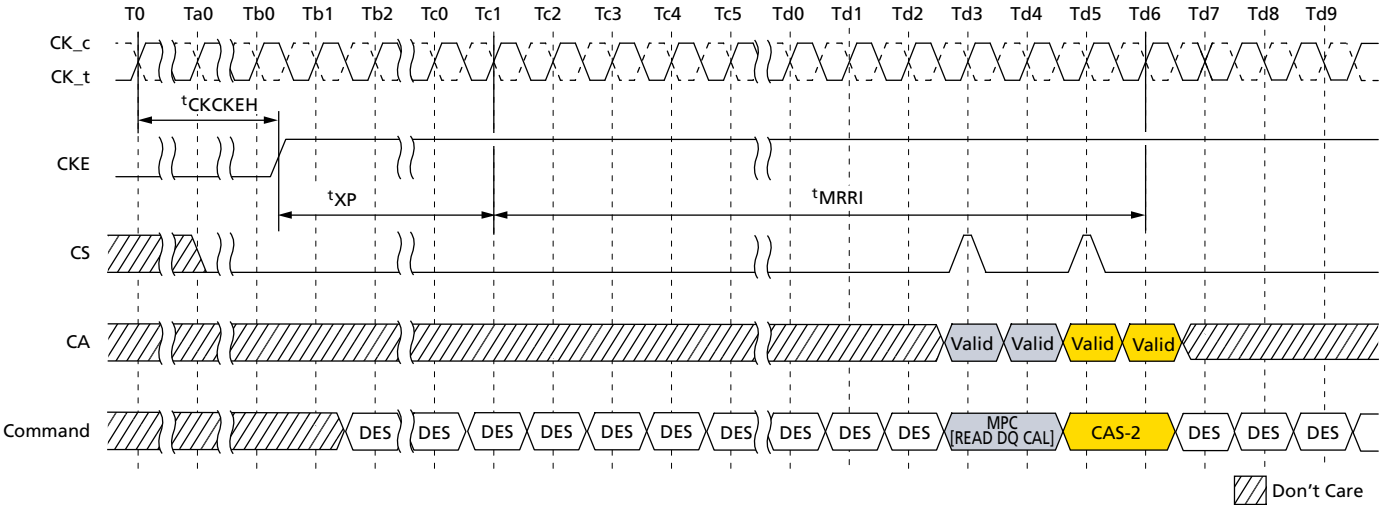

Write Training

The device uses an unmatched DQS-DQ path to enable high-speed performance and save power. As a result, the DQS strobe must be trained to arrive at the DQ latch center-aligned with the data eye. The DQ receiver is located at the DQ pad and has a shorter internal delay than the DQS signal. The DQ receiver will latch the data present on the

Micron Technology, Inc. reserves the right to change products or specifications without notice.
© 2017 Micron Technology, Inc. All rights reserved.

DQ bus when DQS reaches the latch, and training is accomplished by delaying the DQ signals relative to DQS such that the data eye arrives at the receiver latch centered on the DQS transition.

Two modes of training are available:

- Command-based FIFO WR/RD with user patterns
- An internal DQS clock-tree oscillator, which determines the need for, and the magnitude of, required training

The command-based FIFO WR/RD uses the MPC command with operands to enable this special mode of operation. When issuing the MPC command, if CA[5] is set LOW (OP[6] = 0), then the device will perform a NOP command. When CA[5] is set HIGH, the CA[4:0] pins enable training functions or are reserved for future use (RFU). MPC commands that initiate a read or write to the device must be followed immediately by a CAS-2 command. See the MPC Operation section for more information.

To perform write training, the controller can issue an MPC[WRITE-FIFO] command with OP[6:0] set, followed immediately by a CAS-2 command (CAS-2 operands should be driven LOW) to initiate a WRITE-FIFO. Timings for MPC[WRITE-FIFO] are identical to WRITE commands, with WL timed from the second rising clock edge of the CAS-2 command. Up to five consecutive MPC[WRITE-FIFO] commands with user-defined patterns may be issued to the device, which will store up to 80 values (BL16 × 5) per pin that can be read back via the MPC[READ-FIFO] command. (The WRITE/READ-FIFO POINTER operation is described in a different section.

After writing data with the MPC[WRITE-FIFO] command, the data can be read back with the MPC[READ-FIFO] command and results can be compared with "expected" data to determine whether further training (DQ delay) is needed. MPC[READ-FIFO] is initiated by issuing an MPC command, as described in the MPC Operation section, followed immediately by a CAS-2 command (CAS-2 operands must be driven LOW). Timings for the MPC[READ-FIFO] command are identical to READ commands, with RL timed from the second rising clock edge of the CAS-2 command.

READ-FIFO is nondestructive to the data captured in the FIFO; data may be read continuously until it is disturbed by another command, such as a READ, WRITE, or another MPC[WRITE-FIFO]. If fewer than five WRITE-FIFO commands are executed, unwritten registers will have undefined (but valid) data when read back.

For example: If five WRITE-FIFO commands are executed sequentially, then a series of READ-FIFO commands will read valid data from FIFO[0], FIFO[1]….FIFO[4] and then wrap back to FIFO[0] on the next READ-FIFO. However, if fewer than five WRITE-FIFO commands are executed sequentially (example = 3), then a series of READ-FIFO commands will return valid data for FIFO[0], FIFO[1], and FIFO[2], but the next two READ-FIFO commands will return undefined data for FIFO[3] and FIFO[4] before wrapping back to the valid data in FIFO[0].

The READ-FIFO pointer and WRITE-FIFO pointer are reset under the following conditions:

- Power-up initialization
- RESET_n asserted
- Power-down entry
- Self refresh power-down entry

Micron Technology, Inc. reserves the right to change products or specifications without notice.
© 2017 Micron Technology, Inc. All rights reserved.

The MPC[WRITE-FIFO] command advances the WRITE-FIFO pointer, and the MPC[READ-FIFO] advances the READ-FIFO pointer. Also any normal (non-FIFO) READ operation (RD, RDA) advances both WRITE-FIFO pointer and READ-FIFO pointer. Issuing (non-FIFO) READ operation command is inhibited during write training period. To keep the pointers aligned, the SoC memory controller must adhere to the following restriction at the end of Write training period:

$b = a + (n \times c)$

Where:
'a' is the number of MPC[WRITE-FIFO] commands
'b' is the number of MPC[READ-FIFO] commands
'c' is the FIFO depth (= 5 for LPDDR4)
'n' is a positive integer, ≥0

Figure 125: WRITE-to-MPC[WRITE-FIFO] Operation Timing

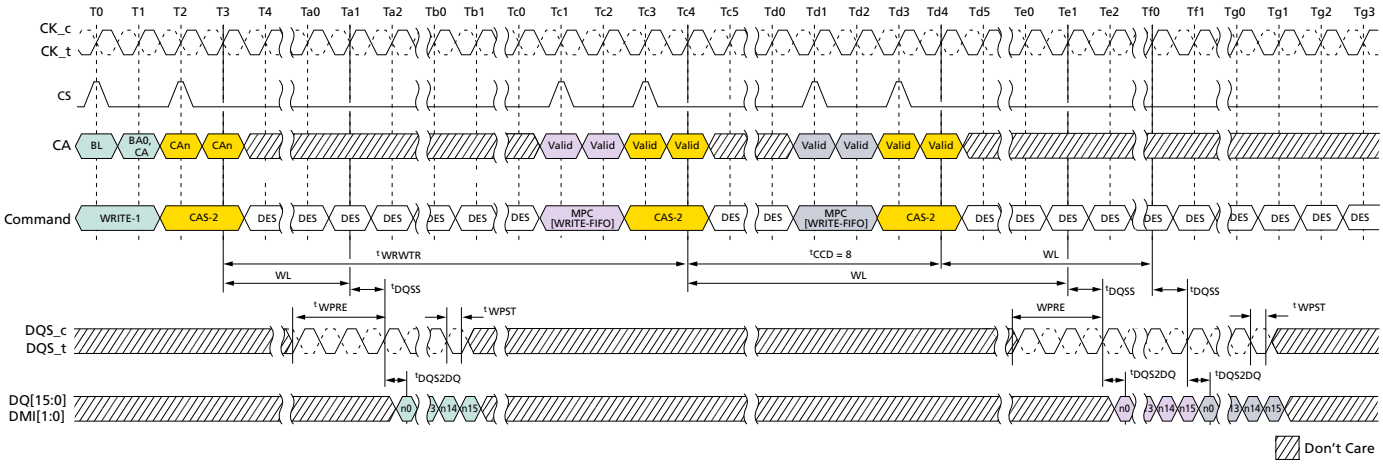

Notes:
1. MPC[WRITE-FIFO] can be executed with a single bank or multiple banks active during REFRESH or during SELF REFRESH with CKE HIGH.
2. Write-1 to MPC is shown as an example of command-to-command timing for MPC. Timing from Write-1 to MPC[WRITE-FIFO] is ^{t}WRWTR.
3. Seamless MPC[WR-FIFO] commands may be executed by repeating the command every ^{t}CCD time.
4. MPC[WRITE-FIFO] uses the same command-to-data timing relationship (WL, ^{t}DQSS, ^{t}DQS2DQ) as a WRITE-1 command.
5. A maximum of five MPC[WRITE-FIFO] commands may be executed consecutively without corrupting FIFO data. The sixth MPC[WRITE-FIFO] command will overwrite the FIFO data from the first command. If fewer than five MPC[WRITE-FIFO] commands are executed, then the remaining FIFO locations will contain undefined data.
6. For the CAS-2 command following an MPC command, the CAS-2 operands must be driven LOW.
7. To avoid corrupting the FIFO contents, MPC[READ-FIFO] must immediately follow MPC[WRITE-FIFO]/CAS-2 without any other commands disturbing FIFO pointers in between. FIFO pointers are disturbed by CKE LOW, WRITE, MASKED WRITE, READ, READ DQ CALIBRATION, and MRR.
8. BL = 16, Write postamble = 0.5*n*CK.
9. DES commands are shown for ease of illustration; other commands may be valid at these times.

Micron Technology, Inc. reserves the right to change products or specifications without notice.
© 2017 Micron Technology, Inc. All rights reserved.

Figure 126: MPC[WRITE-FIFO]-to-MPC[READ-FIFO] Timing

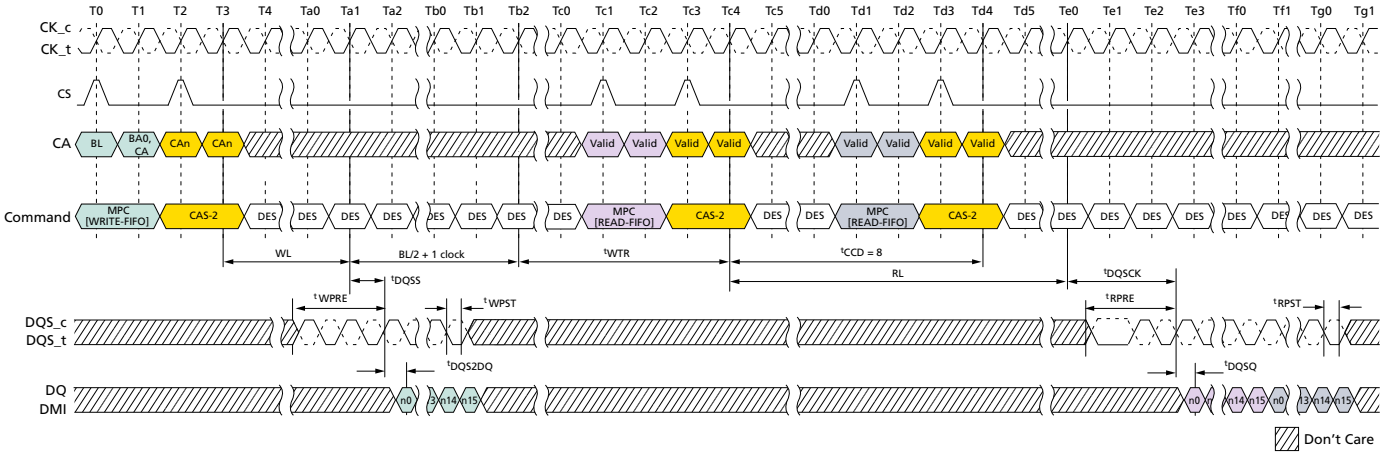

Notes:

1. MPC[WRITE-FIFO] can be executed with a single bank or multiple banks active during refresh or during self refresh with CKE HIGH.
2. MPC[WRITE-FIFO] to MPC[READ-FIFO] is shown as an example of command-to-command timing for MPC. Timing from MPC[WRITE-FIFO] to MPC[READ-FIFO] is specified in the command-to-command timing table.
3. Seamless MPC[READ-FIFO] commands may be executed by repeating the command every ^{t}CCD time.
4. MPC[READ-FIFO] uses the same command-to-data timing relationship (RL, ^{t}DQSCK, ^{t}DQSQ) as a READ-1 command.
5. Data may be continuously read from the FIFO without any data corruption. After five MPC[READ-FIFO] commands, the FIFO pointer will wrap back to the first FIFO and continue advancing. If fewer than five MPC[WRITE-FIFO] commands were executed, then the MPC[READ-FIFO] commands to those FIFO locations will return undefined data. See Write Training for more information on the FIFO pointer behavior.
6. For the CAS-2 command immediately following an MPC command, the CAS-2 operands must be driven LOW.
7. DMI[1:0] signals will be driven if WR-DBI, RD-DBI, or DM is enabled in the mode registers. See Write Training section for more information on DMI behavior.
8. BL = 16, Write postamble = 0.5*n*CK, Read preamble: Toggle, Read postamble: 0.5*n*CK.
9. DES commands are shown for ease of illustration; other commands may be valid at these times.

Micron Technology, Inc. reserves the right to change products or specifications without notice.
© 2017 Micron Technology, Inc. All rights reserved.

Figure 127: MPC[READ-FIFO] to Read Timing

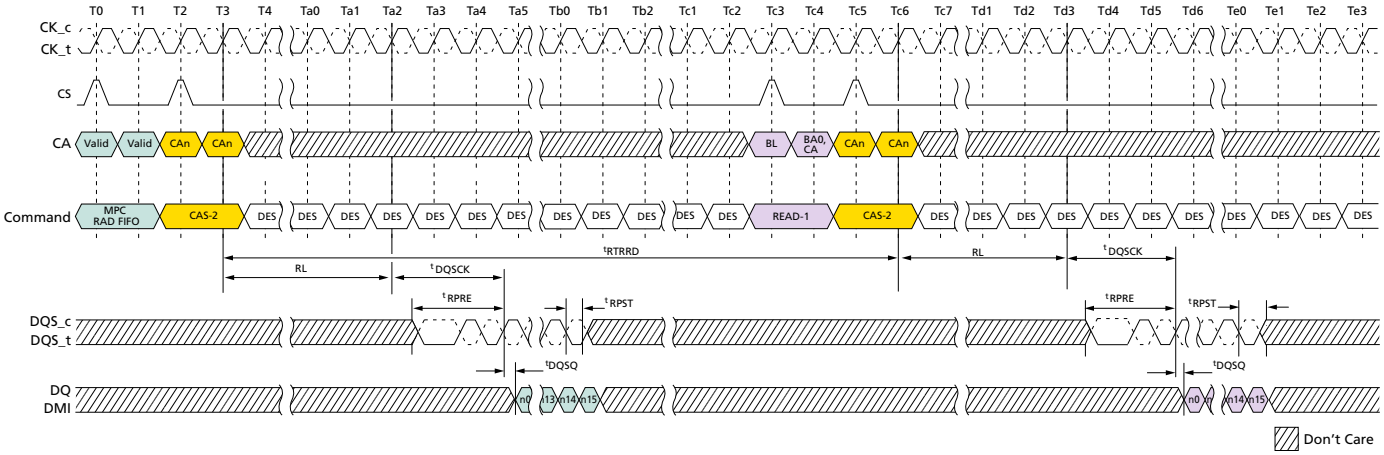

Notes:
1. MPC[WRITE-FIFO] can be executed with a single bank or multiple banks active during refresh or during self refresh with CKE HIGH.
2. MPC[READ-FIFO] to READ-1 operation is shown as an example of command-to-command timing for MPC. Timing from MPC[READ-FIFO] command to READ is ^{t}RTRRD.
3. Seamless MPC[READ-FIFO] commands may be executed by repeating the command every ^{t}CCD time.
4. MPC[READ-FIFO] uses the same command-to-data timing relationship (RL, ^{t}DQSCK, ^{t}DQSQ) as a READ-1 command.
5. Data may be continuously read from the FIFO without any data corruption. After five MPC[READ-FIFO] commands, the FIFO pointer will wrap back to the first FIFO and continue advancing. If fewer than five MPC[WRITE-FIFO] commands were executed, then the MPC[READ-FIFO] commands to those FIFO locations will return undefined data. See Write Training for more information on the FIFO pointer behavior.
6. For the CAS-2 command immediately following an MPC command, the CAS-2 operands must be driven LOW.
7. DMI[1:0] signals will be driven if WR-DBI, RD-DBI, or DM is enabled in the mode registers. See Write Training for more information on DMI behavior.
8. BL = 16, Read preamble: Toggle, Read postamble: 0.5*n*CK
9. DES commands are shown for ease of illustration; other commands may be valid at these times.

Micron Technology, Inc. reserves the right to change products or specifications without notice.
© 2017 Micron Technology, Inc. All rights reserved.

Figure 128: MPC[WRITE-FIFO] with DQ ODT Timing

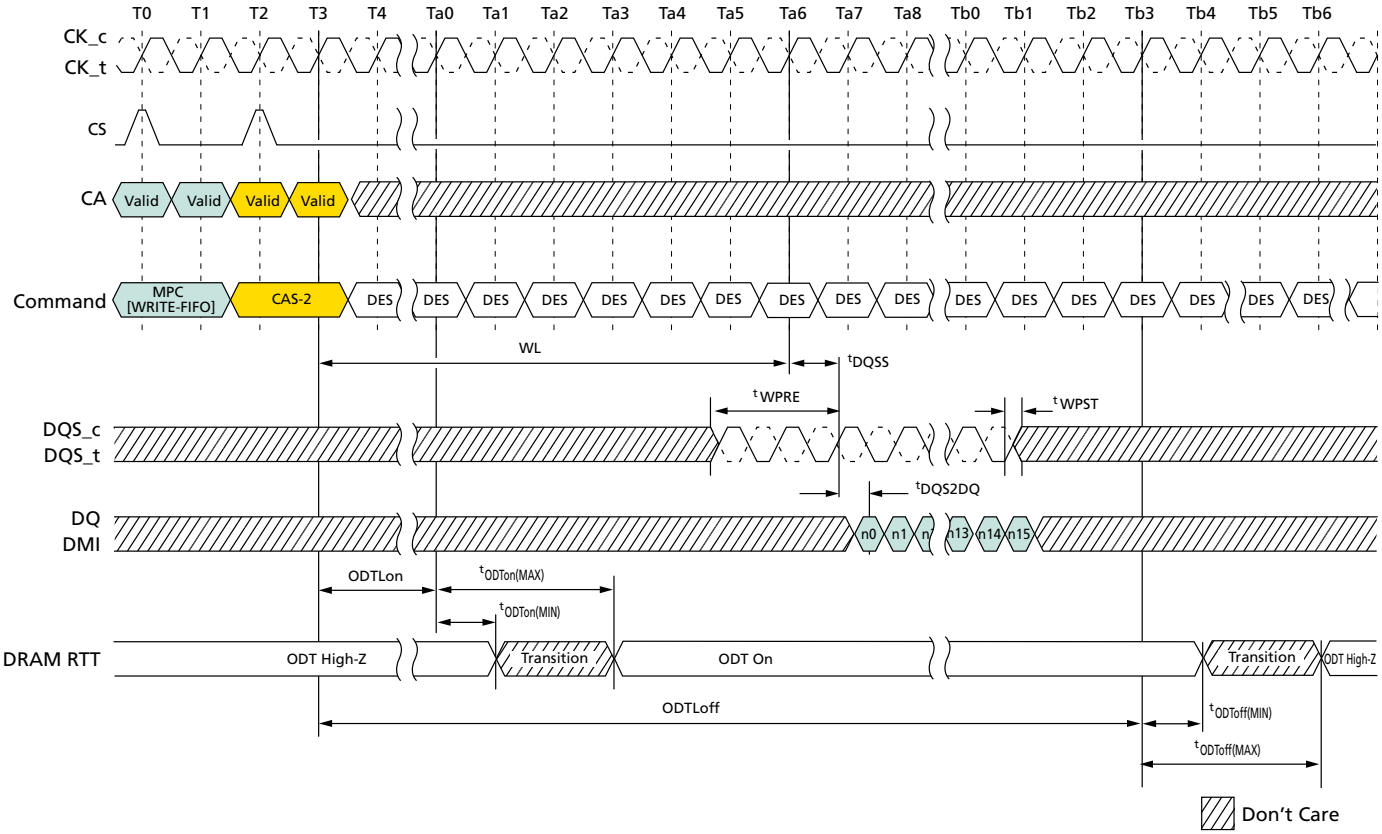

Notes:
1. MPC[WRITE-FIFO] can be executed with a single bank or multiple banks active during refresh or during self refresh with CKE HIGH.
2. MPC[WRITE-FIFO] uses the same command-to-data/ODT timing relationship (RL, ^{t}DQSCK, ^{t}DQS2DQ, ODTLon, ODTLoff, ^{t}ODTon, ^{t}ODToff) as a WRITE-1 command.
3. For the CAS-2 command immediately following an MPC command, the CAS-2 operands must be driven LOW.
4. BL = 16, Write postamble = 0.5*n*CK.
5. DES commands are shown for ease of illustration; other commands may be valid at these times.

Micron Technology, Inc. reserves the right to change products or specifications without notice.
© 2017 Micron Technology, Inc. All rights reserved.

Figure 129: Power-Down Exit to MPC[WRITE-FIFO] Timing

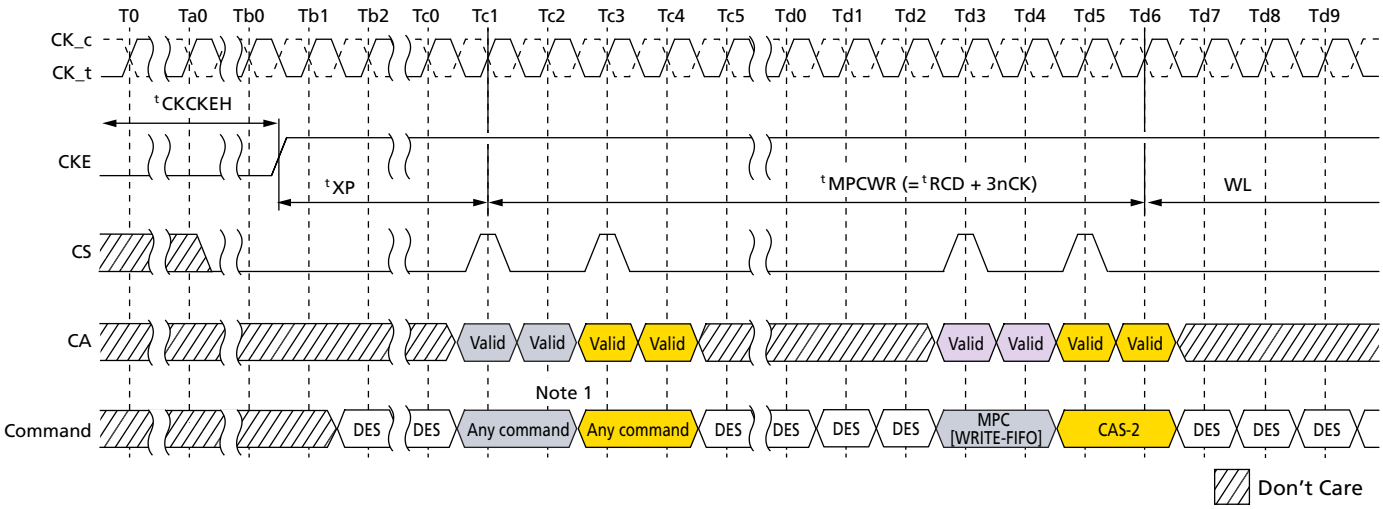

Notes: 1. Any commands except MPC[WRITE-FIFO] and other exception commands defined other section in this document (for example. MPC[READ DQ CALIBRATION]).
2. DES commands are shown for ease of illustration; other commands may be valid at these times.

Table 129: MPC[WRITE-FIFO] AC Timing

Parameter	Symbol	MIN/MAX	Value	Unit
Additional time after ^{t}XP has expired until MPC[WRITE-FIFO] command may be issued	^{t}MPCWR	MIN	^{t}RCD + 3*n*CK	–

Internal Interval Timer

As voltage and temperature change on the device, the DQS clock-tree delay will shift, requiring retraining. The device includes an internal DQS clock-tree oscillator to measure the amount of delay over a given time interval (determined by the controller), allowing the controller to compare the trained delay value to the delay value seen at a later time. The DQS oscillator will provide the controller with important information regarding the need to retrain and the magnitude of potential error.

The DQS interval oscillator is started by issuing an MPC command with OP[6:0] set as described in MPC Operation, which will start an internal ring oscillator that counts the number of time a signal propagates through a copy of the DQS clock tree.

The DQS oscillator may be stopped by issuing an MPC[STOP DQS OSCILLATOR] command with OP[6:0] set as described in MPC Operation, or the controller may instruct the SDRAM to count for a specific number of clocks and then stop automatically (See MR23 for more information). If MR23 is set to automatically stop the DQS oscillator, then the MPC[STOP DQS OSCILLATOR] command should not be used (illegal). When the DQS oscillator is stopped by either method, the result of the oscillator counter is automatically stored in MR18 and MR19.

The controller may adjust the accuracy of the result by running the DQS interval oscillator for shorter (less accurate) or longer (more accurate) duration. The accuracy of the

Micron Technology, Inc. reserves the right to change products or specifications without notice.
© 2017 Micron Technology, Inc. All rights reserved.

result for a given temperature and voltage is determined by the following equation, where run time = total time between START and STOP commands and DQS delay = the value of the DQS clock tree delay (^{t}DQS2DQ(MIN)/(MAX)):

$$\text{DQS oscillator granularity error} = \frac{2 \times (\text{DQS delay})}{\text{run time}}$$

Additional matching error must be included, which is the difference between DQS training circuit and the actual DQS clock tree across voltage and temperature. The matching error is vendor specific. Therefore, the total accuracy of the DQS oscillator counter is given by:

$$\text{DQS oscillator accuracy} = 1 - \text{granularity error} - \text{matching error}$$

For example, if the total time between START and STOP commands is 100ns, and the maximum DQS clock tree delay is 800ps (^{t}DQS2DQ(MAX)), then the DQS oscillator granularity error is:

$$\text{DQS oscillator granularity error} = \frac{2 \times (0.8\text{ns})}{100\text{ns}} = 1.6\%$$

This equates to a granularity timing error of 12.8ps. Assuming a circuit matching error of 5.5ps across voltage and temperature, the accuracy is:

$$\text{DQS oscillator accuracy} = 1 - \frac{12.8 + 5.5}{800} = 97.7\%$$

For example, running the DQS oscillator for a longer period improves the accuracy. If the total time between START and STOP commands is 500ns, and the maximum DQS clock tree delay is 800ps (^{t}DQS2DQ(MAX)), then the DQS oscillator granularity error is:

$$\text{DQS oscillator granularity error} = \frac{2 \times (0.8\text{ns})}{500\text{ns}} = 0.32\%$$

This equates to a granularity timing error or 2.56ps. Assuming a circuit matching error of 5.5ps across voltage and temperature, the accuracy is:

$$\text{DQS oscillator accuracy} = 1 - \frac{2.56 + 5.5}{800} = 99.0\%$$

The result of the DQS interval oscillator is defined as the number of DQS clock tree delays that can be counted within the run time, determined by the controller. The result is stored in MR18-OP[7:0] and MR19-OP[7:0].

MR18 contains the least significant bits (LSB) of the result, and MR19 contains the most significant bits (MSB) of the result. MR18 and MR19 are overwritten by the SDRAM when a MPC[STOP DQS OSCILLATOR] command is received.

The SDRAM counter will count to its maximum value (= 2^16) and stop. If the maximum value is read from the mode registers, the memory controller must assume that the counter overflowed the register and therefore discard the result. The longest run time for the oscillator that will not overflow the counter registers can be calculated as follows:

$$\text{Longest runtime interval} = 2^{16} \times {}^{t}\text{DQS2DQ(MIN)} = 2^{16} \times 0.2\text{ns} = 13.1\mu\text{s}$$

Micron Technology, Inc. reserves the right to change products or specifications without notice.
© 2017 Micron Technology, Inc. All rights reserved.

DQS Interval Oscillator Matching Error

The interval oscillator matching error is defined as the difference between the DQS training ckt (interval oscillator) and the actual DQS clock tree across voltage and temperature.

Parameters:
$^{t}DQS2DQ$: Actual DQS clock tree delay
$^{t}DQS_{OSC}$: Training ckt (interval oscillator) delay
OSC_{Offset}: Average delay difference over voltage and temperature (shown below)
OSC_{Match}: DQS oscillator matching error

Figure 130: Interval Oscillator Offset – OSC_{offset}

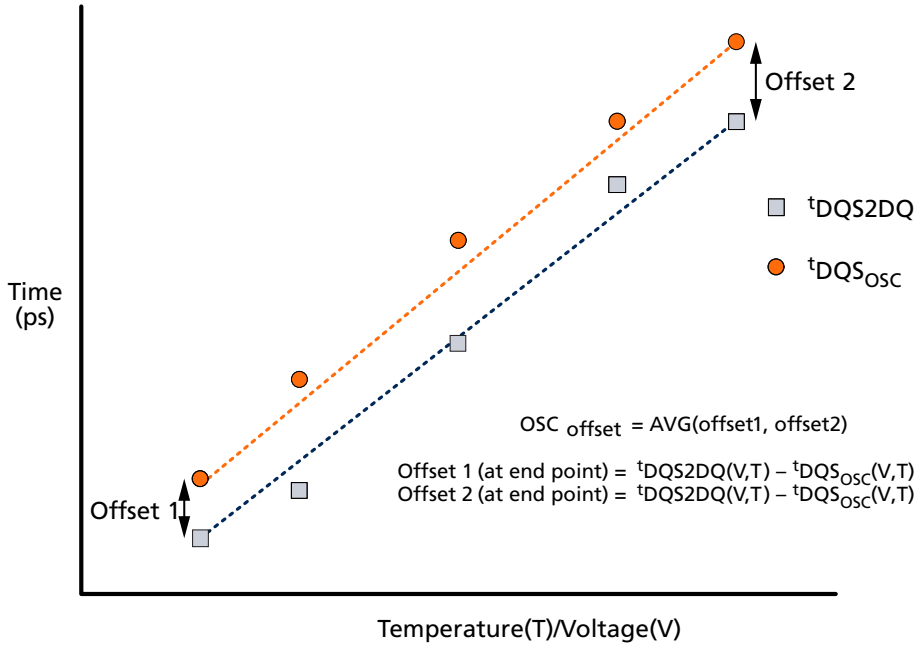

OSC_{Match} :

$$OSC_{Match} = [\ ^{t}DQS2DQ(V,T) - {}^{t}DQS_{OSC}(V,T) - OSC_{offset}\ ]$$

$^{t}DQS_{OSC}$:

$$^{t}DQS_{OSC}(V,T) = [\ \frac{Runtime}{2 \times Count}\ ]$$

Table 130: DQS Oscillator Matching Error Specification

Parameter	Symbol	MIN	MAX	Unit	Notes
DQS oscillator matching error	OSC_{Match}	–20	20	ps	1, 2, 3, 4, 5, 6, 7, 8
DQS oscillator offset	OSC_{offset}	–100	100	ps	2, 4. 7

Notes: 1. The OSC_{Match} is the matching error per between the actual DQS and DQS interval oscillator over voltage and temperature.

Micron Technology, Inc. reserves the right to change products or specifications without notice.
© 2017 Micron Technology, Inc. All rights reserved.

2. This parameter will be characterized or guaranteed by design.
3. The OSC_{Match} is defined as the following:

   $$OSC_{Match} = [\ {}^{t}DQS2DQ_{(V,\ T)} - {}^{t}DQS_{OSC(V,\ T)} - OSC_{offset}\ ]$$

   Where ${}^{t}DQS2DQ(V,T)$ and ${}^{t}DQS_{OSC}(V,T)$ are determined over the same voltage and temperature conditions.
4. The runtime of the oscillator must be at least 200ns for determining ${}^{t}DQS_{OSC}(V,T)$.

   $${}^{t}DQS_{OSC}(V,T) = [\ \frac{Runtime}{2 \times Count}\ ]$$
5. The input stimulus for ${}^{t}DQS2DQ$ will be consistent over voltage and temperature conditions.
6. The OSC_{offset} is the average difference of the endpoints across voltage and temperature.
7. These parameters are defined per channel.
8. ${}^{t}DQS2DQ(V,T)$ delay will be the average of DQS-to-DQ delay over the runtime period.

OSC Count Readout Time

OSC Stop to its counting value readout timing is shown in following figures.

Figure 131: In Case of DQS Interval Oscillator is Stopped by MPC Command

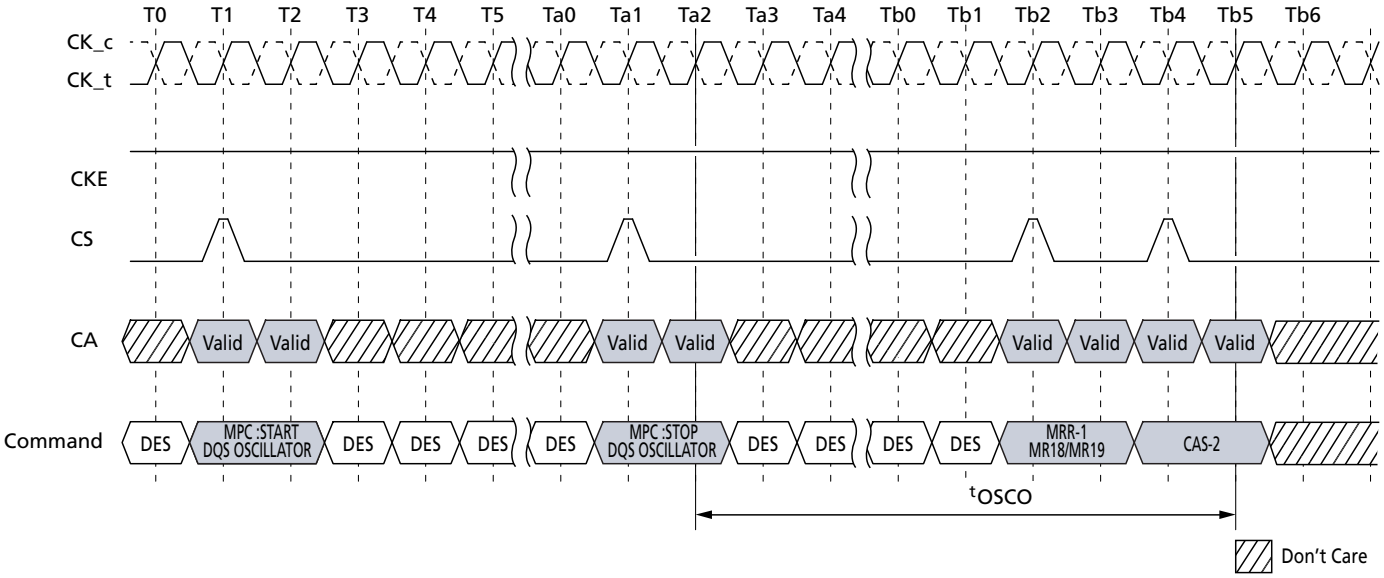

Note: 1. DQS interval timer run time setting :MR23 OP[7:0] = 00000000b.

Micron Technology, Inc. reserves the right to change products or specifications without notice.
© 2017 Micron Technology, Inc. All rights reserved.

Figure 132: In Case of DQS Interval Oscillator is Stopped by DQS Interval Timer

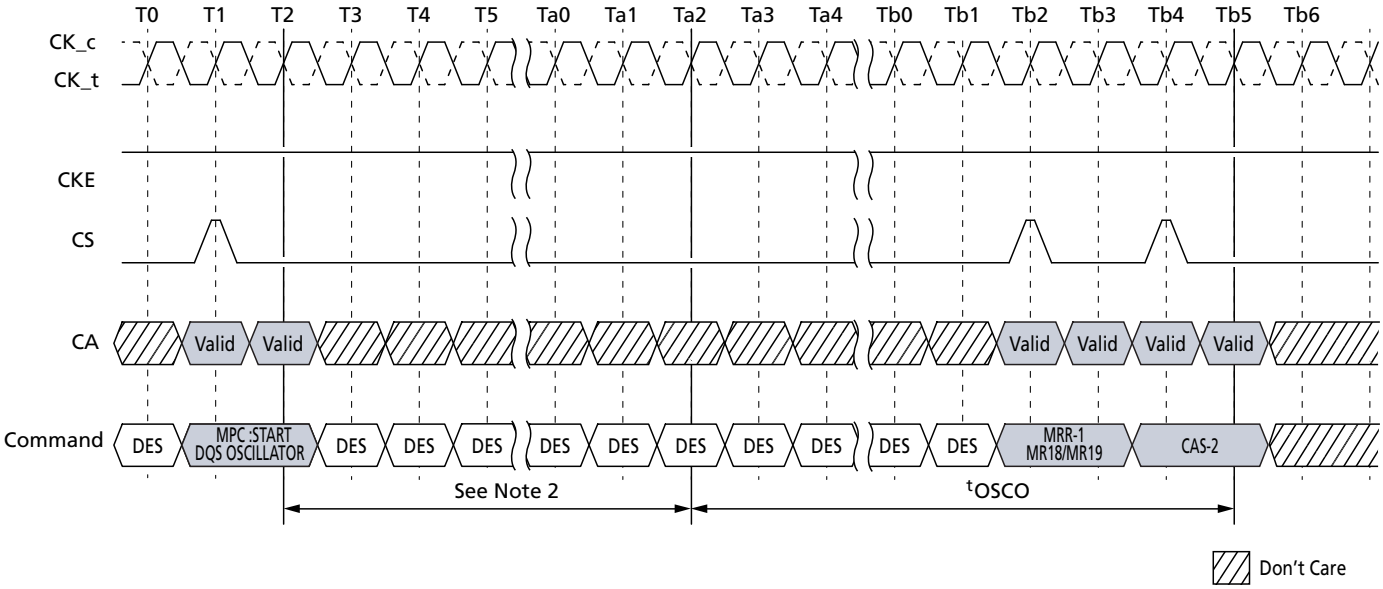

Notes: 1. DQS interval timer run time setting: MR23 OP[7:0] ≠ 00000000b.
2. Setting counts of MR23.

Table 131: DQS Interval Oscillator AC Timing

Parameter	Symbol	MIN/MAX	Value	Unit
Delay time from OSC stop to mode register readout	^{t}OSCO	MIN	MAX(40ns, 8*n*CK)	ns

Note: 1. START DQS OSCILLATOR command is prohibited until ^{t}OSCO(MIN) is satisfied.

Micron Technology, Inc. reserves the right to change products or specifications without notice.
© 2017 Micron Technology, Inc. All rights reserved.

Thermal Offset

Because of tight thermal coupling, hot spots on an SOC can induce thermal gradients across the device. Because these hot spots may not be located near the thermal sensor, the temperature compensated self refresh (TCSR) circuit may not generate enough refresh cycles to guarantee memory retention. To address this shortcoming, the controller can provide a thermal offset that the memory can use to adjust its TCSR circuit to ensure reliable operation.

This thermal offset is provided through MR4 OP[6:5] to either or both channels (dual-channel devices). This temperature offset may modify refresh behaviour for the channel to which the offset is provided. It will take a maximum of 200µs to have the change reflected in MR4 OP[2:0] for the channel to which the offset is provided. If the induced thermal gradient from the device temperature sensor location to the hot spot location of the controller is greater than 15°C, self refresh mode will not reliably maintain memory contents.

To accurately determine the temperature gradient between the memory thermal sensor and the induced hot spot, the memory thermal sensor location must be provided to the controller.

Temperature Sensor

The device has a temperature sensor that can be read from MR4. This sensor can be used to determine the appropriate refresh rate, to determine whether AC timing de-rating is required at an elevated temperature range, and to monitor the operating temperature. Either the temperature sensor or the device T_{OPER} can be used to determine if operating temperature requirements are being met.

The device monitors device temperature and updates MR4 according to ^{t}TSI. Upon exiting self refresh or power-down, the device temperature status bits shall be no older than ^{t}TSI.

When using the temperature sensor, the actual device case temperature may be higher than the T_{OPER} specification that applies to standard or elevated temperature ranges. For example, T_{CASE} may be above 85°C when MR4[2:0] = b011. The device enables a 2°C temperature margin between the point when the device updates the MR4 value and the point when the controller reconfigures the system accordingly. When performing tight thermal coupling of the device to external hot spots, the maximum device temperature may be higher than indicated by MR4.

To ensure proper operation when using the temperature sensor, consider the following:

- TempGradient is the maximum temperature gradient experienced by the device at the temperature of interest over a range of 2°C.
- ReadInterval is the time period between MR4 reads from the system.
- TempSensorInterval (^{t}TSI) is the maximum delay between the internal updates of MR4.
- SysRespDelay is the maximum time between a read of MR4 and a response from the system.

In order to determine the required frequency of polling MR4, the system uses the TempGradient and the maximum response time of the system in the following equation:

$$\text{TempGradient} \times (\text{ReadInterval} + {}^{t}\text{TSI} + \text{SysRespDelay}) \leq 2°\text{C}$$

Micron Technology, Inc. reserves the right to change products or specifications without notice.
© 2017 Micron Technology, Inc. All rights reserved.

Table 132: Temperature Sensor

Parameter	Symbol	Max/Min	Value	Unit
System temperature gradient	TempGradient	MAX	System Dependent	°C/s
MR4 read interval	ReadInterval	MAX	System Dependent	ms
Temperature sensor interval	^{t}TSI	MAX	32	ms
System response delay	SysRespDelay	MAX	System Dependent	ms
Device temperature margin	TempMargin	MAX	2	°C

For example, if TempGradient is 10°C/s and the SysRespDelay is 1ms:

(10°C/s) x (ReadInterval + 32ms + 1ms) ≤ 2°C

In this case, ReadInterval shall be no greater than 167ms.

Figure 133: Temperature Sensor Timing

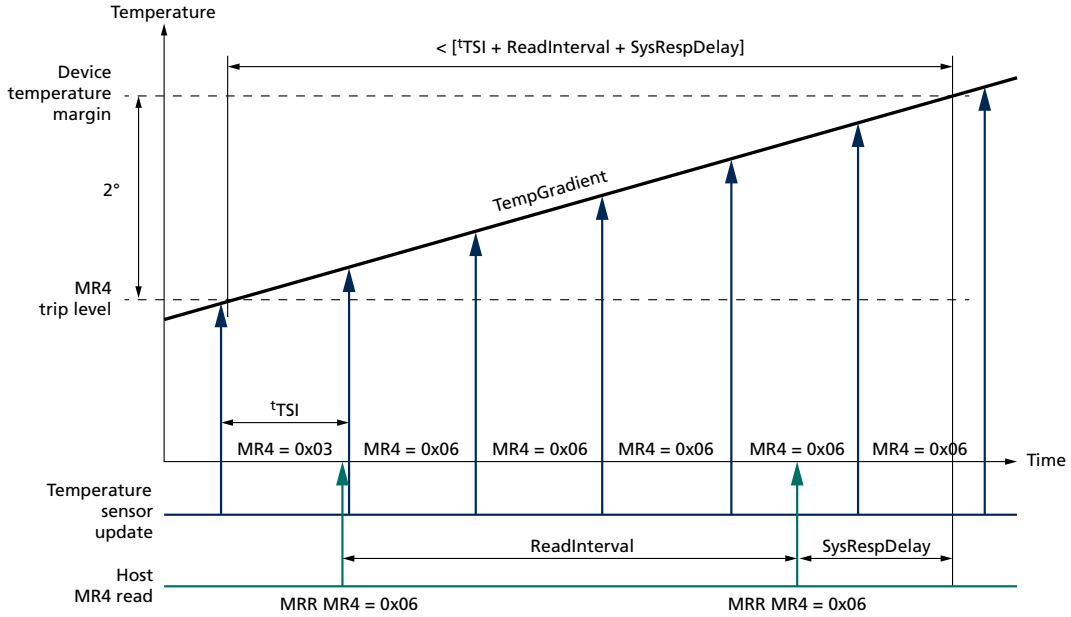

ZQ Calibration

The MPC command is used to initiate ZQ calibration, which calibrates the output driver impedance and CA/DQ ODT impedance across process, temperature, and voltage. ZQ calibration occurs in the background of device operation and is designed to eliminate any need for coordination between channels (that is, it allows for channel independence). ZQ calibration is required each time that the PU-Cal value (MR3-OP[0]) is changed. Additional ZQ CALIBRATION commands may be required as the voltage and temperature change in the system environment. CA ODT values (MR11-OP[6:4]) and DQ ODT values (MR11-OP[2:0]) may be changed without performing ZQ calibration, as long as the PU-Cal value doesn't change.

Micron Technology, Inc. reserves the right to change products or specifications without notice.
© 2017 Micron Technology, Inc. All rights reserved.

There are two ZQ calibration modes initiated with the MPC command: ZQCAL START and ZQCAL LATCH. ZQCAL START initiates the calibration procedure, and ZQCAL LATCH captures the result and loads it into the drivers.

A ZQCAL START command may be issued anytime the device is not in a power-down state. A ZQCAL LATCH command may be issued anytime outside of power-down after ^{t}ZQCAL has expired and all DQ bus operations have completed. The CA bus must maintain a deselect state during ^{t}ZQLAT to allow CA ODT calibration settings to be updated. The DQ calibration value will not be updated until ZQCAL LATCH is performed and ^{t}ZQLAT has been met. The following mode register fields that modify I/O parameters cannot be changed following a ZQCAL START command and before ^{t}ZQCAL has expired:

- PU-Cal (pull-up calibration V_{OH} point)
- PDDS (pull-down drive strength and Rx termination)
- DQ ODT (DQ ODT value)
- CA ODT (CA ODT value)

ZQCAL Reset

The ZQCAL RESET command resets the output impedance calibration to a default accuracy of ±30% across process, voltage, and temperature. This command is used to ensure output impedance accuracy to ±30% when ZQCAL START and ZQCAL LATCH commands are not used.

The ZQCAL RESET command is executed by writing MR10-OP[0] = 1B.

Table 133: ZQ Calibration Parameters

Parameter	Symbol	Min/Max	Value	Unit
ZQCAL START to ZQCAL LATCH command interval	^{t}ZQCAL	MIN	1	µs
ZQCAL LATCH to next valid command interval	^{t}ZQLAT	MIN	MAX(30ns, 8*n*CK)	ns
ZQCAL RESET to next valid command interval	^{t}ZQRESET	MIN	MAX(50ns, 3*n*CK)	ns

Figure 134: ZQCAL Timing

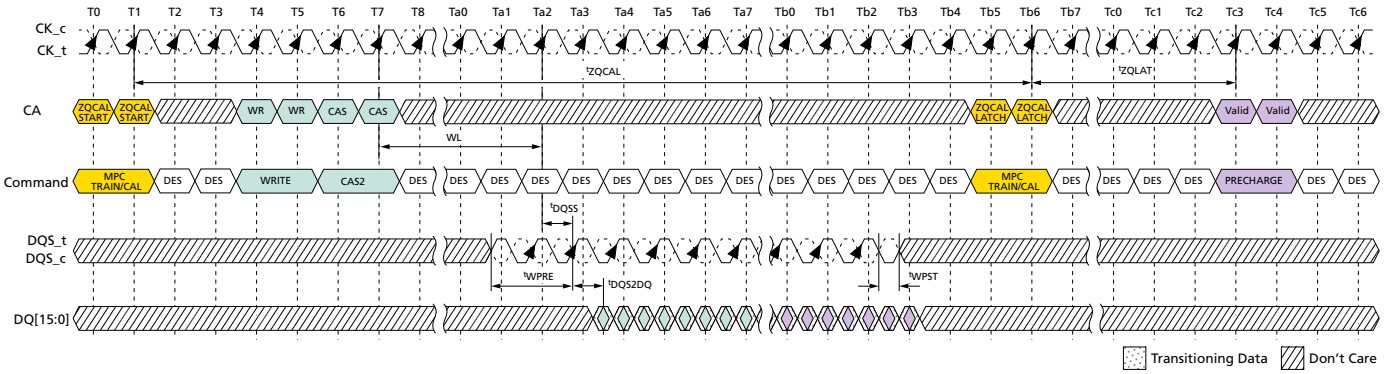

Notes: 1. WRITE and PRECHARGE operations are shown for illustrative purposes. Any single or multiple valid commands may be executed within the ^{t}ZQCAL time and prior to latching the results.

Micron Technology, Inc. reserves the right to change products or specifications without notice.
© 2017 Micron Technology, Inc. All rights reserved.

2. Before the ZQCAL LATCH command can be executed, any prior commands that utilize the DQ bus must have completed. WRITE commands with DQ termination must be given enough time to turn off the DQ ODT before issuing the ZQCAL LATCH command. See the ODT section for ODT timing.

Multichannel Considerations

The device includes a single ZQ pin and associated ZQ calibration circuitry. Calibration values from this circuit will be used by both channels according to the following protocol:

- The ZQCAL START command can be issued to either or both channels.
- The ZQCAL START command can be issued when either or both channels are executing other commands, and other commands can be issued during ^{t}ZQCAL.
- The ZQCAL START command can be issued to both channels simultaneously.
- The ZQCAL START command will begin the calibration unless a previously requested ZQ calibration is in progress.
- If the ZQCAL START command is received while a ZQ calibration is in progress, the command will be ignored and the in-progress calibration will not be interrupted.
- The ZQCAL LATCH command is required for each channel.
- The ZQCAL LATCH command can be issued to both channels simultaneously.
- The ZQCAL LATCH command will latch results of the most recent ZQCAL START command provided ^{t}ZQCAL has been met.
- ZQCAL LATCH commands that do not meet ^{t}ZQCAL will latch the results of the most recently completed ZQ calibration.
- The ZQRESET MRW commands will only reset the calibration values for the channel issuing the command.

In compliance with complete channel independence, either channel may issue ZQCAL START and ZQCAL LATCH commands as needed without regard to the state of the other channel.

ZQ External Resistor, Tolerance, and Capacitive Loading

To use the ZQ CALIBRATION function, a 240 ohms, ±1% tolerance external resistor must be connected between the ZQ pin and V_{DDQ}.

If the system configuration shares the CA bus to form a x32 (or wider) channel, the ZQ pin of each die's x16 channel must use a separate ZQCAL resistor.

If the system configuration has more than one rank, and if the ZQ pins of both ranks are attached to a single resistor, then the SDRAM controller must ensure that the ZQCAL's don't overlap.

The total capacitive loading on the ZQ pin must be limited to 25pF. For example, if a system configuration shares a CA bus between *n* channels to form an *n* x16 wide bus, and no means are available to control the ZQCAL separately for each channel (that is, separate CS, CKE, or CK), then each x16 channel must have a separate ZQCAL resistor. For a x32, two-rank system, each x16 channel must have its own ZQCAL resistor, but the ZQCAL resistor can be shared between ranks on each x16 channel. In this configuration, the CS signal can be used to ensure that the ZQCAL commands for Rank[0] and Rank[1] don't overlap.

Micron Technology, Inc. reserves the right to change products or specifications without notice.
© 2017 Micron Technology, Inc. All rights reserved.

Frequency Set Points

Frequency set points enable the CA bus to be switched between two differing operating frequencies with changes in voltage swings and termination values, without ever being in an untrained state, which could result in a loss of communication to the device. This is accomplished by duplicating all CA bus mode register parameters, as well as other mode register parameters commonly changed with operating frequency.

These duplicated registers form two sets that use the same mode register addresses, with read/write access controlled by MR bit FSP-WR (frequency set point write/read) and the operating point controlled by MR bit FSP-OP (FREQUENCY SET POINT operation). Changing the FSP-WR bit enables MR parameters to be changed for an alternate frequency set point without affecting the current operation.

Once all necessary parameters have been written to the alternate set point, changing the FSP-OP bit will switch operation to use all of the new parameters simultaneously (within ^{t}FC), eliminating the possibility of a loss of communication that could be caused by a partial configuration change.

Parameters that have two physical registers controlled by FSP-WR and FSP-OP include those in the following table.

Table 134: Mode Register Function With Two Physical Registers

MR Number	Operand	Function	Notes
MR1	OP[2]	WR-PRE (Write preamble length)	
	OP[3]	RD-PRE (Read preamble type)	
	OP[6:4]	*n*WR (Write-recovery for AUTO PRECHARGE command)	
	OP[7]	RD-PST (Read postamble length)	
MR2	OP[2:0]	RL (READ latency)	
	OP[5:3]	WL (WRITE latency)	
	OP[6]	WLS (WRITE latency set)	
MR3	OP[0]	PU-CAL (Pull-up calibration point)	1
	OP[1]	WR-PST(Write postamble length)	
	OP[5:3]	PDDS (Pull-down drive strength)	
	OP[6]	DBI-RD (DBI-read enable)	
	OP[7]	DBI-WR (DBI-write enable)	
MR11	OP[2:0]	DQ ODT (DQ bus receiver on-die termination)	
	OP[6:4]	CA ODT (CA bus receiver on-die termination)	
MR12	OP[5:0]	$V_{REF(CA)}$ ($V_{REF(CA)}$ setting)	
	OP[6]	VR_{CA} ($V_{REF(CA)}$ range)	
MR14	OP[5:0]	$V_{REF(DQ)}$ ($V_{REF(DQ)}$ setting)	
	OP[6]	VR_{DQ} ($V_{REF(DQ)}$ range)	

Micron Technology, Inc. reserves the right to change products or specifications without notice.
© 2017 Micron Technology, Inc. All rights reserved.

Table 134: Mode Register Function With Two Physical Registers (Continued)

MR Number	Operand	Function	Notes
MR22	OP[2:0]	SOC ODT (Controller ODT value for V_{OH} calibration)	
	OP[3]	ODTE-CK (CK ODT enabled for non-terminating rank)	
	OP[4]	ODTE-CS (CS ODT enable for non-terminating rank)	
	OP[5]	ODTD-CA (CA ODT termination disable)	

Note: 1. For dual-channel devices, PU-CAL setting is required as the same value for both Ch.A and Ch.B before issuing ZQCAL START command. See Mode Register Definition section for more details.

The table below shows how the two mode registers for each of the parameters in the previous table can be modified by setting the appropriate FSP-WR value and how device operation can be switched between operating points by setting the appropriate FSP-OP value. The FSP-WR and FSP-OP functions operate completely independently.

Table 135: Relation Between MR Setting and DRAM Operation

Function	MR# and Operand	Data	Operation	Notes
FSP-WR	MR13 OP[6]	0 (default)	Data write to mode register N for FSP-OP[0] by MRW command.	1
			Data read from mode register N for FSP-OP[0] by MRR command.	
		1	Data write to mode register N for FSP-OP[1] by MRW command.	
			Data read from mode register N for FSP-OP[1] by MRR command.	
FSP-OP	MR13 OP[7]	0 (default)	DRAM operates with mode register N for FSP-OP[0] setting.	2
		1	DRAM operates with mode register N for FSP-OP[1] setting.	

Notes: 1. FSP-WR stands for frequency set point write/read.
2. FSP-OP stands for frequency set point operating point.

Frequency Set Point Update Timing

The frequency set point update timing is shown below. When changing the frequency set point via MR13 OP[7], the V_{RCG} setting: MR13 OP[3] have to be changed into V_{REF} fast response (high current) mode at the same time. After frequency change time (^{t}FC) is satisfied. V_{RCG} can be changed into normal operation mode via MR13 OP[3].

Micron Technology, Inc. reserves the right to change products or specifications without notice.
© 2017 Micron Technology, Inc. All rights reserved.

Figure 135: Frequency Set Point Switching Timing

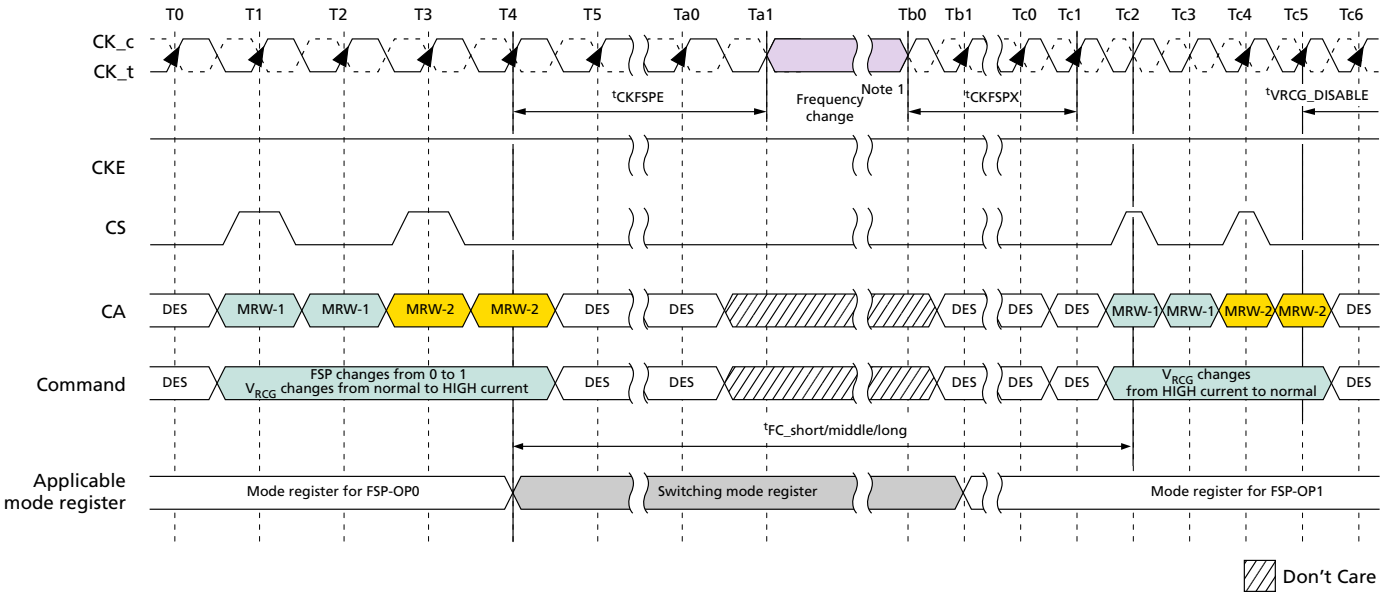

Note: 1. For frequency change during frequency set point switching, refer to Input Clock Stop and Frequency Change section.

Table 136: Frequency Set Point AC Timing

Parameter	Symbol	Min/ Max	Data Rate				Unit	Notes
			1600	3200	3733	4267		
Frequency set point switching time	tFC_short	MIN	200				ns	1
	tFC_middle	MIN	200				ns	
	tFC_long	MIN	250				ns	
Valid clock requirement after entering FSP change	tCKFSPE	MIN	MAX(7.5ns, 4*n*CK)				–	
Valid clock requirement before first valid command after FSP change	tCKFSPX	MIN	MAX(7.5ns, 4*n*CK)				–	

Note: 1. Frequency set point switching time depends on value of $V_{REF(CA)}$ setting: MR12 OP[5:0] and $V_{REF(CA)}$ range: MR12 OP[6] of FSP-OP 0 and 1. The details are shown in table below. Additionally change of frequency set point may affect $V_{REF(DQ)}$ setting. Settling time of $V_{REF(DQ)}$ level is the same as $V_{REF(CA)}$ level.

Table 137: tFC Value Mapping

Application	Step Size		Range	
	From FSP-OP0	To FSP-OP1	From FSP -OP0	To FSP-OP1
tFC_short	Base	A single step size increment/decrement	Base	No change
tFC_middle	Base	Two or more step size increment/decrement	Base	No change

Micron Technology, Inc. reserves the right to change products or specifications without notice.
© 2017 Micron Technology, Inc. All rights reserved.

Table 137: ^{t}FC Value Mapping (Continued)

Application	Step Size		Range	
	From FSP-OP0	To FSP-OP1	From FSP -OP0	To FSP-OP1
^{t}FC_long	–	–	Base	Change

Note: 1. As well as change from FSP-OP1 to FSP-OP0.

Table 138: ^{t}FC Value Mapping: Example

Case	From/To	FSP-OP: MR13 OP[7]	$V_{REF(CA)}$ Setting: MR12: OP[5:0]	$V_{REF(CA)}$ Range: MR12 OP[6]	Application	Notes
1	From	0	001100	0	^{t}FC_short	1
	To	1	001101	0		
2	From	0	001100	0	^{t}FC_middle	2
	To	1	001110	0		
3	From	0	Don't Care	0	^{t}FC_long	3
	To	1	Don't Care	1		

Notes:
1. A single step size increment/decrement for $V_{REF(CA)}$ setting value.
2. Two or more step size increment/decrement for $V_{REF(CA)}$ setting value.
3. $V_{REF(CA)}$ range is changed. In this case, changing $V_{REF(CA)}$ setting doesn't affect ^{t}FC value.

The LPDDR4 SDRAM defaults to FSP-OP[0] at power-up. Both set points default to settings needed to operate in un-terminated, low-frequency environments. To enable the device to operate at higher frequencies, Command bus training mode should be utilized to train the alternate frequency set point. See Command Bus Training section for more details on this training mode.

Micron Technology, Inc. reserves the right to change products or specifications without notice.
© 2017 Micron Technology, Inc. All rights reserved.

Figure 136: Training for Two Frequency Set Points

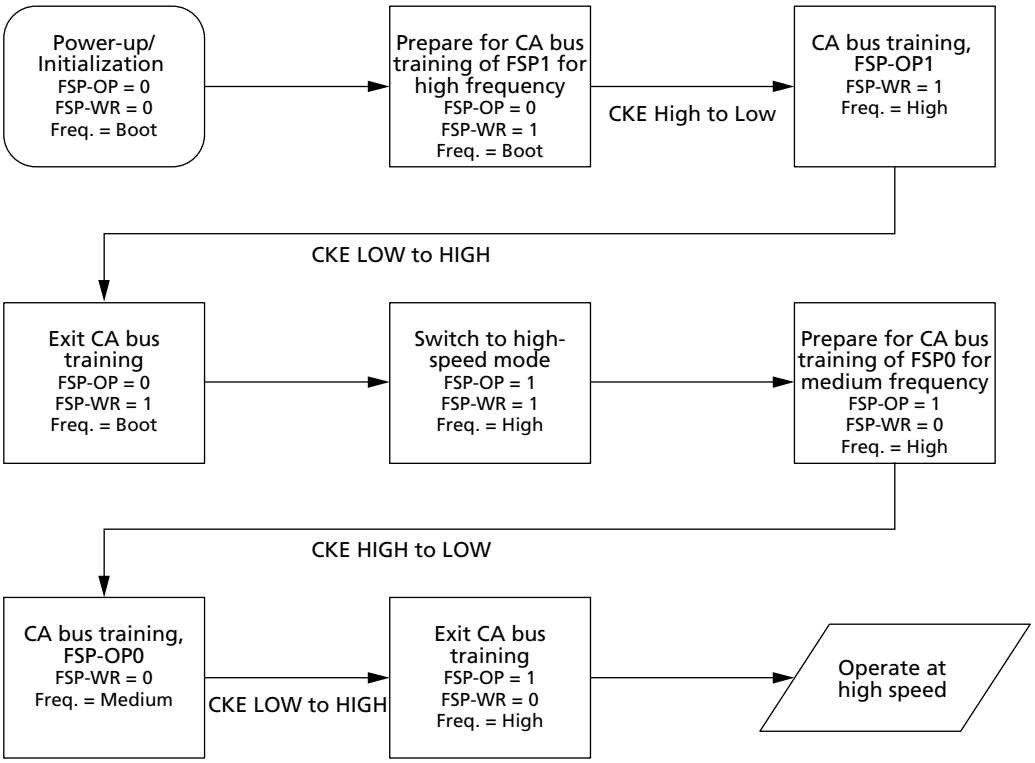

Once both of the frequency set points have been trained, switching between points can be performed with a single MRW followed by waiting for time ^{t}FC.

Figure 137: Example of Switching Between Two Trained Frequency Set Points

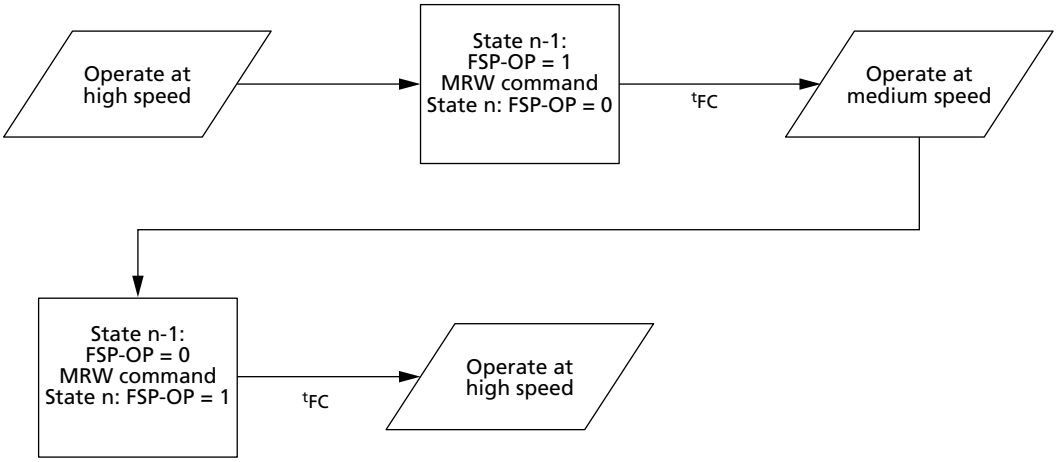

Switching to a third (or more) set point can be accomplished if the memory controller has stored the previously-trained values (in particular the $V_{REF(CA)}$ calibration value) and rewrites these to the alternate set point before switching FSP-OP.

Micron Technology, Inc. reserves the right to change products or specifications without notice.
© 2017 Micron Technology, Inc. All rights reserved.

Figure 138: Example of Switching to a Third Trained Frequency Set Point

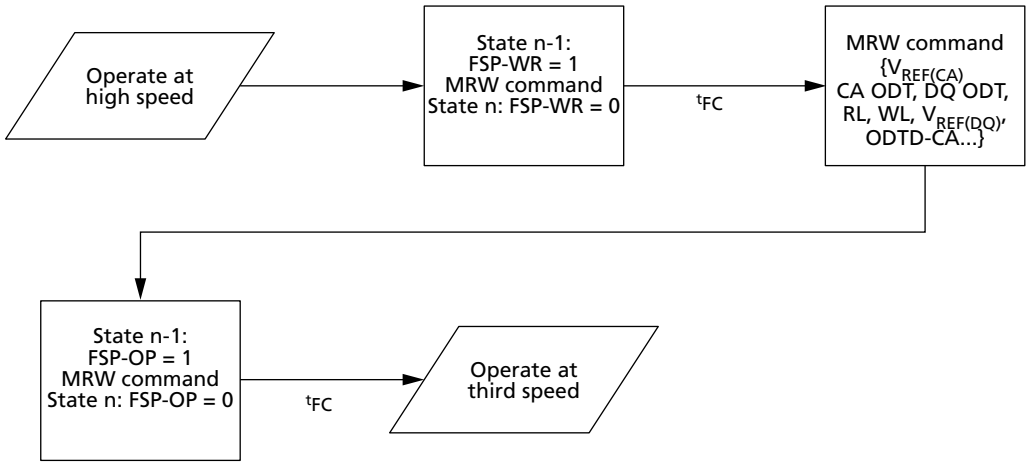

Pull-Up and Pull-Down Characteristics and Calibration

Table 139: Pull-Down Driver Characteristics – ZQ Calibration

$R_{ONPD,nom}$	Register	Min	Nom	Max	Unit
40 ohms	R_{ON40PD}	0.90	1.0	1.10	$R_{ZQ}/6$
48 ohms	R_{ON48PD}	0.90	1.0	1.10	$R_{ZQ}/5$
60 ohms	R_{ON60PD}	0.90	1.0	1.10	$R_{ZQ}/4$
80 ohms	R_{ON80PD}	0.90	1.0	1.10	$R_{ZQ}/3$
120 ohms	$R_{ON120PD}$	0.90	1.0	1.10	$R_{ZQ}/2$
240 ohms	$R_{ON240PD}$	0.90	1.0	1.10	$R_{ZQ}/1$

Note: 1. All value are after ZQ calibration. Without ZQ calibration, R_{ONPD} values are ±30%.

Table 140: Pull-Up Characteristics – ZQ Calibration

$V_{OHPU,nom}$	$V_{OH,nom}$	Min	Nom	Max	Unit
$V_{DDQ} \times 0.5$	300	0.90	1.0	1.10	$V_{OH,nom}$
$V_{DDQ} \times 0.6$	360	0.90	1.0	1.10	$V_{OH,nom}$

Notes: 1. All value are after ZQ calibration. Without ZQ calibration, R_{ONPD} values are ±30%.
2. $V_{OH,nom}$ (mV) values are based on a nominal V_{DDQ} = 0.6V.

Table 141: Valid Calibration Points

V_{OHPU}	ODT Value					
	240	120	80	60	48	40
$V_{DDQ} \times 0.5$	Valid	Valid	Valid	Valid	Valid	Valid

Micron Technology, Inc. reserves the right to change products or specifications without notice.
© 2017 Micron Technology, Inc. All rights reserved.

Table 141: Valid Calibration Points (Continued)

V_{OHPU}	ODT Value					
	240	120	80	60	48	40
$V_{DDQ} \times 0.6$	DNU	Valid	DNU	Valid	DNU	DNU

Notes:
1. After the output is calibrated for a given $V_{OH,nom}$ calibration point, the ODT value may be changed without recalibration.
2. If the $V_{OH,nom}$ calibration point is changed, then recalibration is required.
3. DNU = Do not use.

On-Die Termination for the Command/Address Bus

The on-die termination (ODT) feature allows the device to turn on/off termination resistance for CK_t, CK_c, CS, and CA[5:0] signals without the ODT control pin. The ODT feature is designed to improve signal integrity of the memory channel by allowing the DRAM controller to turn on and off termination resistance for any target DRAM devices via the mode register setting.

A simple functional representation of the DRAM ODT feature is shown below.

Figure 139: ODT for CA

$$R_{TT} = \frac{V_{OUT}}{|I_{OUT}|}$$

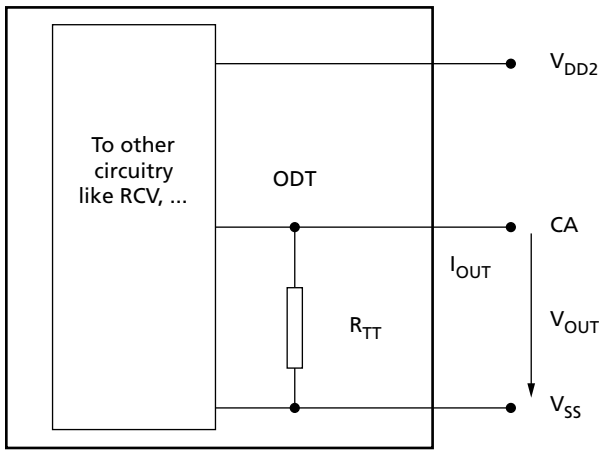

ODT Mode Register and ODT State Table

ODT termination values are set and enabled via MR11. The CA bus (CK_t, CK_c, CS, CA[5:0]) ODT resistance values are set by MR11 OP[6:4]. The default state for the CA is ODT disabled.

ODT is applied on the CA bus to the CK_t, CK_c, CS, and CA signals. Generally only one termination load will be present even if multiple devices are sharing the command signals. In contrast to LPDDR4 where the ODT_CA input is used in combination with mode registers, LPDDR4X uses mode registers exclusively to enable CA termination. Be-

Micron Technology, Inc. reserves the right to change products or specifications without notice.
© 2017 Micron Technology, Inc. All rights reserved.

fore enabling CA termination via MR11, all ranks should have appropriate MR22 termination settings programmed. In a multi rank system, the terminating rank should be trained first, followed by the non-terminating rank(s).

Table 142: Command Bus ODT State

CA ODT MR11[6:4]	ODTD-CA MR22 OP[5]	ODTE-CK MR22 OP[3]	ODTE-CS MR22 OP[4]	ODT State for CA	ODT State for CK	ODT State for CS
Disabled[1]	Valid[2]	Valid[2]	Valid[2]	Off	Off	Off
Valid [2]	0	0	0	On	On	On
Valid [2]	0	0	1	On	On	Off
Valid [2]	0	1	0	On	Off	On
Valid [2]	0	1	1	On	Off	Off
Valid [2]	1	0	0	Off	On	On
Valid [2]	1	0	1	Off	On	Off
Valid [2]	1	1	0	Off	Off	On
Valid [2]	1	1	1	Off	Off	Off

Notes: 1. Default value
2. Valid = 0 or 1

ODT Mode Register and ODT Characteristics

Table 143: ODT DC Electrical Characteristics for Command/Address Bus

R_{ZQ} = 240Ω ±1% over entire operating range after calibration

MR11 OP[6:4]	R_{TT}	V_{OUT}	Min	Nom	Max	Unit	Notes
001b	240Ω	$V_{OL(DC)} = 0.2 \times V_{DDQ}$	0.8	1.0	1.1	$R_{ZQ}/1$	1, 2
		$V_{OM(DC)} = 0.50 \times V_{DDQ}$	0.9	1.0	1.1		
		$V_{OH(DC)} = 0.75 \times V_{DDQ}$	0.9	1.0	1.3		
010b	120Ω	$V_{OL(DC)} = 0.2 \times V_{DDQ}$	0.8	1.0	1.1	$R_{ZQ}/2$	1, 2
		$V_{OM(DC)} = 0.50 \times V_{DDQ}$	0.9	1.0	1.1		
		$V_{OH(DC)} = 0.75 \times V_{DDQ}$	0.9	1.0	1.3		
011b	80Ω	$V_{OL(DC)} = 0.2 \times V_{DDQ}$	0.8	1.0	1.1	$R_{ZQ}/3$	1, 2
		$V_{OM(DC)} = 0.50 \times V_{DDQ}$	0.9	1.0	1.1		
		$V_{OH(DC)} = 0.75 \times V_{DDQ}$	0.9	1.0	1.3		
100b	60Ω	$V_{OL(DC)} = 0.2 \times V_{DDQ}$	0.8	1.0	1.1	$R_{ZQ}/4$	1, 2
		$V_{OM(DC)} = 0.50 \times V_{DDQ}$	0.9	1.0	1.1		
		$V_{OH(DC)} = 0.75 \times V_{DDQ}$	0.9	1.0	1.3		
101b	48Ω	$V_{OL(DC)} = 0.2 \times V_{DDQ}$	0.8	1.0	1.1	$R_{ZQ}/5$	1, 2
		$V_{OM(DC)} = 0.50 \times V_{DDQ}$	0.9	1.0	1.1		
		$V_{OH(DC)} = 0.75 \times V_{DDQ}$	0.9	1.0	1.3		

Micron Technology, Inc. reserves the right to change products or specifications without notice.
© 2017 Micron Technology, Inc. All rights reserved.

Table 143: ODT DC Electrical Characteristics for Command/Address Bus (Continued)

R_{ZQ} = 240Ω ±1% over entire operating range after calibration

MR11 OP[6:4]	R_{TT}	V_{OUT}	Min	Nom	Max	Unit	Notes
110b	40Ω	$V_{OL(DC)}$ = 0.2 × V_{DDQ}	0.8	1.0	1.1	R_{ZQ}/6	1, 2
		$V_{OM(DC)}$ = 0.50 × V_{DDQ}	0.9	1.0	1.1		
		$V_{OH(DC)}$ = 0.75 × V_{DDQ}	0.9	1.0	1.3		
Mismatch CA-to-CA within clock group		0.50 × V_{DDQ}	–	–	2	%	1, 2, 3

Notes:
1. The tolerance limits are specified after calibration with stable temperature and voltage. To understand the behavior of the tolerance limits when voltage or temperature changes after calibration, see the section on voltage and temperature sensitivity.
2. Pull-down ODT resistors are recommended to be calibrated at 0.50 × V_{DDQ}. Other calibration points may be used to achieve the linearity specification shown above, for example, calibration at 0.75 × V_{DDQ} and 0.20 × V_{DDQ}.
3. CA to CA mismatch within clock group variation for a given component including CK_t, CK_c ,and CS (characterized).

$$\text{CA-to-CA mismatch} = \frac{R_{ODT}\,(MAX) - R_{ODT}\,(MIN)}{R_{ODT}\,(AVG)}$$

ODT for CA Update Time

Figure 140: ODT for CA Setting Update Timing in 4-Clock Cycle Command

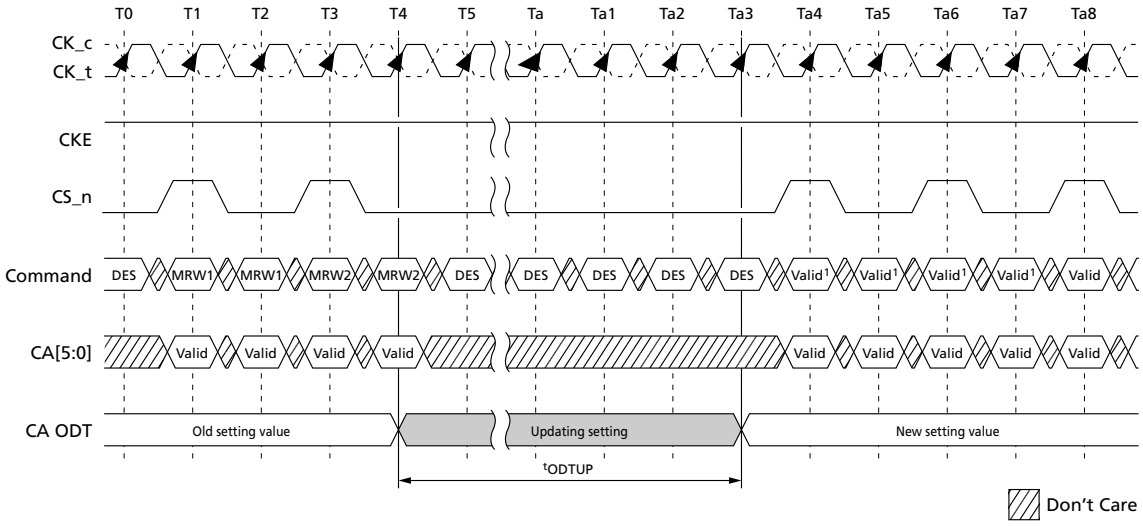

DQ On-Die Termination

On-die termination (ODT) is a feature that allows the device to turn on/off termination resistance for each DQ, DQS, and DMI signal without the ODT control pin. The ODT feature is designed to improve signal integrity of the memory channel by allowing the

Micron Technology, Inc. reserves the right to change products or specifications without notice.
© 2017 Micron Technology, Inc. All rights reserved.

DRAM controller to turn on and off termination resistance for any target DRAM devices during WRITE or MASK WRITE operation.

The ODT feature is off and cannot be supported in power-down and self refresh modes.

The switch is enabled by the internal ODT control logic, which uses the WRITE-1 or MASK WRITE-1 command and other mode register control information. The value of R_{TT} is determined by the MR bits.

$$R_{TT} = \frac{V_{OUT}}{|I_{OUT}|}$$

Figure 141: Functional Representation of DQ ODT

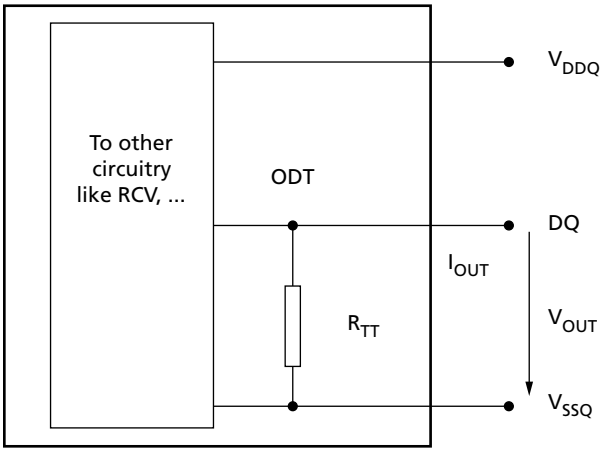

Table 144: ODT DC Electrical Characteristics for DQ Bus

R_{ZQ} = 240Ω ±1% over entire operating range after calibration

MR11 OP[2:0]	R_{TT}	V_{OUT}	Min	Nom	Max	Unit	Notes
001b	240Ω	$V_{OL(DC)} = 0.2 \times V_{DDQ}$	0.8	1.0	1.1	$R_{ZQ}/1$	1, 2
		$V_{OM(DC)} = 0.50 \times V_{DDQ}$	0.9	1.0	1.1		
		$V_{OH(DC)} = 0.75 \times V_{DDQ}$	0.9	1.0	1.3		
010b	120Ω	$V_{OL(DC)} = 0.2 \times V_{DDQ}$	0.8	1.0	1.1	$R_{ZQ}/2$	1, 2
		$V_{OM(DC)} = 0.50 \times V_{DDQ}$	0.9	1.0	1.1		
		$V_{OH(DC)} = 0.75 \times V_{DDQ}$	0.9	1.0	1.3		
011b	80Ω	$V_{OL(DC)} = 0.2 \times V_{DDQ}$	0.8	1.0	1.1	$R_{ZQ}/3$	1, 2
		$V_{OM(DC)} = 0.50 \times V_{DDQ}$	0.9	1.0	1.1		
		$V_{OH(DC)} = 0.75 \times V_{DDQ}$	0.9	1.0	1.3		
100b	60Ω	$V_{OL(DC)} = 0.2 \times V_{DDQ}$	0.8	1.0	1.1	$R_{ZQ}/4$	1, 2
		$V_{OM(DC)} = 0.50 \times V_{DDQ}$	0.9	1.0	1.1		
		$V_{OH(DC)} = 0.75 \times V_{DDQ}$	0.9	1.0	1.3		
101b	48Ω	$V_{OL(DC)} = 0.2 \times V_{DDQ}$	0.8	1.0	1.1	$R_{ZQ}/5$	1, 2
		$V_{OM(DC)} = 0.50 \times V_{DDQ}$	0.9	1.0	1.1		
		$V_{OH(DC)} = 0.75 \times V_{DDQ}$	0.9	1.0	1.3		

Micron Technology, Inc. reserves the right to change products or specifications without notice.
© 2017 Micron Technology, Inc. All rights reserved.

Table 144: ODT DC Electrical Characteristics for DQ Bus (Continued)

R_{ZQ} = 240Ω ±1% over entire operating range after calibration

MR11 OP[2:0]	R_{TT}	V_{OUT}	Min	Nom	Max	Unit	Notes
110b	40Ω	$V_{OL(DC)}$ = 0.2 × V_{DDQ}	0.8	1.0	1.1	R_{ZQ}/6	1, 2
		$V_{OM(DC)}$ = 0.50 × V_{DDQ}	0.9	1.0	1.1		
		$V_{OH(DC)}$ = 0.75 × V_{DDQ}	0.9	1.0	1.3		
Mismatch DQ-to-DQ within clock group		0.50 × V_{DDQ}	–	–	2	%	1, 2, 3

Notes:
1. The ODT tolerance limits are specified after calibration with stable temperature and voltage. To understand the behavior of the tolerance limits when voltage or temperature changes after calibration, see the following section on voltage and temperature sensitivity.
2. Pull-down ODT resistors are recommended to be calibrated at 0.50 × V_{DDQ}. Other calibration points may be used to achieve the linearity specification shown above, for example, calibration at 0.75 × V_{DDQ} and 0.20 × V_{DDQ}.
3. DQ-to-DQ mismatch within byte variation for a given component, including DQS (characterized).

$$\text{DQ-to-DQ mismatch} = \frac{R_{ODT}\,(MAX) - R_{ODT}\,(MIN)}{R_{ODT}\,(AVG)}$$

Output Driver and Termination Register Temperature and Voltage Sensitivity

When temperature and/or voltage change after calibration, the tolerance limits are widen according to the tables below.

Table 145: Output Driver and Termination Register Sensitivity Definition

Resistor	Definition Point	Min	Max	Unit	Notes
R_{ONPD}	0.50 × V_{DDQ}	90 - (dR_{ONdT} · |ΔT|) - (dR_{ONdV} · |ΔV|)	110 + (dR_{ONdT} · |ΔT|) + (dR_{ONdV} · |ΔV|)	%	1, 2
V_{OHPU}	0.50 × V_{DDQ}	90 - (dV_{OHdT} · |ΔT|) - (dV_{OHdV} · |ΔV|)	110 + (dV_{OHdT} · |ΔT|) + (dV_{OHdV} · |ΔV|)		1, 2
$R_{TT(I/O)}$	0.50 × V_{DDQ}	90 - (dR_{ONdT} · |ΔT|) - (dR_{ONdV} · |ΔV|)	110 + (dR_{ONdT} · |ΔT|) + (dR_{ONdV} · |ΔV|)		1, 2, 3
$R_{TT(IN)}$	0.50 × V_{DD2}	90 - (dR_{ONdT} · |ΔT|) - (dR_{ONdV} · |ΔV|)	110 + (dR_{ONdT} · |ΔT|) + (dR_{ONdV} · |ΔV|)		1, 2, 4

Notes:
1. ΔT = T - T(@calibration), ΔV = V - V(@calibration)
2. dR_{ONdT}, dR_{ONdV}, dV_{OHdT}, dV_{OHdV}, dR_{TTdV}, and dR_{TTdT} are not subject to production test but are verified by design and characterization.
3. This parameter applies to input/output pin such as DQS, DQ, and DMI.
4. This parameter applies to input pin such as CK, CA, and CS.
5. Refer to Pull-Up/Pull-Down Driver Characteristics for V_{OHPU}.

Table 146: Output Driver and Termination Register Temperature and Voltage Sensitivity

Symbol	Parameter	Min	Max	Unit
dR_{ONdT}	R_{ON} temperature sensitivity	0	0.75	%/°C
dR_{ONdV}	R_{ON} voltage sensitivity	0	0.20	%/mV

Micron Technology, Inc. reserves the right to change products or specifications without notice.
© 2017 Micron Technology, Inc. All rights reserved.

Table 146: Output Driver and Termination Register Temperature and Voltage Sensitivity (Continued)

Symbol	Parameter	Min	Max	Unit
dV_{OHdT}	V_{OH} temperature sensitivity	0	0.75	%/°C
dV_{OHdV}	V_{OH} voltage sensitivity	0	0.35	%/mV
dR_{TTdT}	R_{TT} temperature sensitivity	0	0.75	%/°C
dR_{TTdV}	R_{TT} voltage sensitivity	0	0.20	%/mV

ODT Mode Register

The ODT mode is enabled if MR11 OP[2:0] are non-zero. In this case, the value of R_{TT} is determined by the settings of those bits. The ODT mode is disabled if MR11 OP[2:0] = 0.

Asynchronous ODT

When ODT mode is enabled in MR11 OP[2:0], DRAM ODT is always High-Z. The DRAM ODT feature is automatically turned ON asynchronously after a WRITE-1, MASK WRITE-1, or MPC[WRITE-FIFO] command. After the burst write is complete, the DRAM ODT turns OFF asynchronously. The DQ bus ODT control is automatic and will turn the ODT resistance on/off if DQ ODT is enabled in the mode register.

The following timing parameters apply when the DQ bus ODT is enabled:

- ODTLon, ^{t}ODTon(MIN), ^{t}ODTon(MAX)
- ODTLoff, ^{t}ODToff(MIN), ^{t}ODToff(MAX)

$ODTL_{ON}$ is a synchronous parameter and is the latency from a CAS-2 command to the ^{t}ODTon reference. $ODTL_{ON}$ latency is a fixed latency value for each speed bin. Each speed bin has a different $ODTL_{ON}$ latency.

Minimum R_{TT} turn-on time (^{t}ODTon(MIN)) is the point in time when the device termination circuit leaves High-Z and ODT resistance begins to turn on.

Maximum R_{TT} turn on time (^{t}ODTon(MAX)) is the point in time when the ODT resistance is fully on.

^{t}ODTon(MIN) and ^{t}ODTon(MAX) are measured after $ODTL_{ON}$ latency is satisfied from CAS-2 command.

$ODTL_{OFF}$ is a synchronous parameter and it is the latency from CAS-2 command to ^{t}ODToff reference. $ODTL_{OFF}$ latency is a fixed latency value for each speed bin. Each speed bin has a different $ODTL_{OFF}$ latency.

Minimum R_{TT} turn-off time (^{t}ODToff(MIN)) is the point in time when the device termination circuit starts to turn off the ODT resistance.

Maximum ODT turn off time (^{t}ODToff(MAX)) is the point in time when the on-die termination has reached High-Z.

^{t}ODToff(MIN) and ^{t}ODToff(MAX) are measured after $ODTL_{OFF}$ latency is satisfied from CAS-2 command.

Micron Technology, Inc. reserves the right to change products or specifications without notice.
© 2017 Micron Technology, Inc. All rights reserved.

Table 147: $ODTL_{ON}$ and $ODTL_{OFF}$ Latency Values

$ODTL_{ON}$ Latency[1]		$ODTL_{OFF}$ Latency[2]		Lower Frequency Limit (>) (MHz)	Upper Frequency Limit (≤) (MHz)
$^tWPRE = 2^tCK$					
WL Set A (*n*CK)	WL Set B (*n*CK)	WL Set A (*n*CK)	WL Set B (*n*CK)		
N/A	N/A	N/A	N/A	10	266
N/A	N/A	N/A	N/A	266	533
N/A	6	N/A	22	533	800
4	12	20	28	800	1066
4	14	22	32	1066	1333
6	18	24	36	1333	1600
6	20	26	40	1600	1866
8	24	28	44	1866	2133

Notes: 1. $ODTL_{ON}$ is referenced from CAS-2 command.
2. $ODTL_{OFF}$ as shown in table assumes BL = 16. For BL32, 8 ^tCK should be added.

Figure 142: Asynchronous ODTon/ODToff Timing

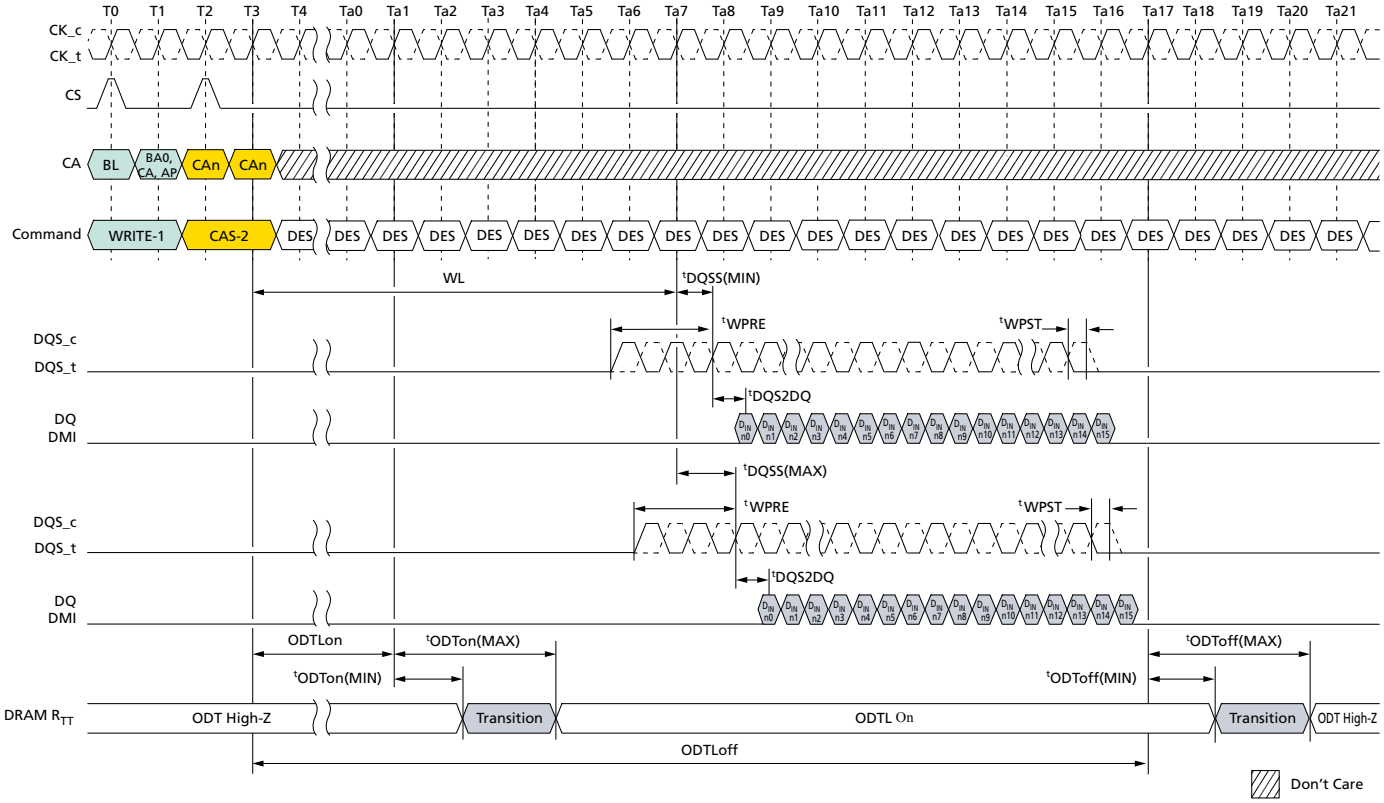

Notes: 1. BL = 16, Write postamble = 0.5*n*CK, DQ/DQS: V_{SSQ} termination.
2. D_{IN} *n* = data-in to column *n*.

Micron Technology, Inc. reserves the right to change products or specifications without notice.
© 2017 Micron Technology, Inc. All rights reserved.

3. DES commands are shown for ease of illustration; other commands may be valid at these times.

DQ ODT During Power-Down and Self Refresh Modes

DQ bus ODT will be disabled in power-down mode. In self refresh mode, the ODT will be turned off when CKE is LOW but will be enabled if CKE is HIGH and DQ ODT is enabled in the mode register.

ODT During Write Leveling Mode

If ODT is enabled in MR11 OP[2:0] in write leveling mode, the device always provides the termination on DQS signals. DQ termination is always off in write leveling mode.

Table 148: Termination State in Write Leveling Mode

ODT State in MR11 OP[2:0]	DQS Termination	DQ[15:0]/DMI[1:0] Termination
Disabled	Off	Off
Enabled	On	Off

Micron Technology, Inc. reserves the right to change products or specifications without notice.
© 2017 Micron Technology, Inc. All rights reserved.

Target Row Refresh Mode

The device limits the number of times that a given row can be accessed within a refresh period (^{t}REFW × 2) prior to requiring adjacent rows to be refreshed. The maximum activate count (MAC) is the maximum number of activates that a single row can sustain within a refresh period before the adjacent rows need to be refreshed. The row receiving the excessive actives is the target row (TRn), the adjacent rows to be refreshed are the victim rows. When the MAC limit is reached on TRn, either the device receives all (R × 2) REFRESH commands before another row activate is issued, or the device should be placed into targeted row refresh (TRR) mode. The TRR mode will refresh the rows adjacent to the TRn that encountered ^{t}MAC limit.

If the device supports unlimited MAC value: MR24 OP[2:0] = 000 and MR24 OP[3] = 1, TARGET ROW REFRESH operation is not required. Even though the device allows to set MR24 OP[7] = 1: TRR mode enable, in this case the device behavior is vendor specific. For example, a certain device may ignore MRW command for entering/exiting TRR mode or a certain device may support commands related TRR mode. See vendor device data sheets for details about TRR mode definition at supporting unlimited MAC value case.

There could be a maximum of two target rows to a victim row in a bank. The cumulative value of the activates from the two target rows on a victim row in a bank should not exceed MAC value.

MR24 fields are required to support the new TRR settings. Setting MR24 OP[7] = 1 enables TRR mode and setting MR24 OP[7] = 0 disables TRR mode. MR24 OP[6:4] defines which bank (BAn) the target row is located in (refer to MR24 table for details).

The TRR mode must be disabled during initialization as well as any other device calibration modes. The TRR mode is entered from a DRAM idle state, once TRR mode has been entered, no other mode register commands are allowed until TRR mode is completed; however, setting MR24 OP[7] = 0 to interrupt and reissue the TRR mode is allowed.

When enabled, TRR mode is self-clearing. the mode will be disabled automatically after the completion of defined TRR flow (after the third BAn precharge has completed plus ^{t}MRD). Optionally, the TRR mode can also be exited via another MRS command at the completion of TRR by setting MR24 OP[7] = 0. If the TRR is exited via another MRS command, the value written to MR24 OP[6:4] are "Don't Care."

TRR Mode Operation

1. The timing diagram depicts TRR mode. The following steps must be performed when TRR mode is enabled. This mode requires all three ACT (ACT1, ACT2, and ACT3) and three corresponding PRE commands (PRE1, PRE2, and PRE3) to complete TRR mode. PRECHARGE All (PREA) commands issued while the device is in TRR mode will also perform precharge to BAn and counts towards PREn command.
2. Prior to issuing the MRW command to enter TRR mode, the device should be in the idle state. MRW command must be issued with MR24 OP[7] = 1 and MR24 OP[6:4] defining the bank in which the targeted row is located. All other MR24 bits should remain unchanged.
3. No activity is to occur with the device until ^{t}MRD has been satisfied. When ^{t}MRD has been satisfied, the only commands allowed BAn, until TRR mode has completed, are ACT and PRE.

Micron Technology, Inc. reserves the right to change products or specifications without notice.
© 2017 Micron Technology, Inc. All rights reserved.

4. The first ACT to the BAn with the TRn address can now be applied; no other command is allowed at this point. All other banks must remain inactive from when the first BAn ACT command is issued until [(1.5 x ^{t}RAS) + ^{t}RP] is satisfied.
5. After the first ACT to the BAn with the TRn address is issued, PRE to BAn is to be issued (1.5 × ^{t}RAS) later; and then followed ^{t}RP later by the second ACT to the BAn with the TRn address.
6. After the second ACT to the BAn with the TRn address is issued, PRE to BAn is to be issued ^{t}RAS later and then followed ^{t}RP later by the third ACT to the BAn with the TRn address.
7. After the third ACT to the BAn with the TRn address is issued, PRE to BAn would be issued ^{t}RAS later. TRR mode is completed once ^{t}RP plus ^{t}MRD is satisfied.
8. TRR mode must be completed as specified to guarantee that adjacent rows are refreshed. Anytime the TRR mode is interrupted and not completed, the interrupted TRR mode must be cleared and then subsequently performed again. To clear an interrupted TRR mode, MR24 change is required with setting MR24 OP[7] = 0, MR24 OP[6:4] are "Don't care," followed by three PRE to BAn, with ^{t}RP time in between each PRE command. The complete TRR sequence (steps 2–7) must be then reissued and completed to guarantee that the adjacent rows are refreshed.
9. A REFRESH command to the device, or entering self refresh mode, is not allowed while the device is in TRR mode.

Figure 143: Target Row Refresh Mode

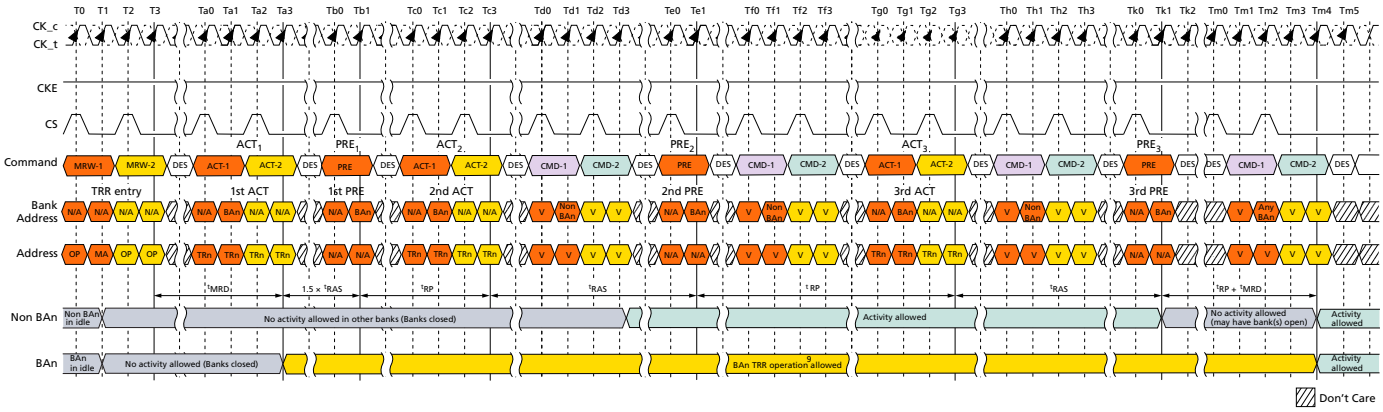

Notes:
1. TRn is the targeted row.
2. Bank BAn represents the bank in which the targeted row is located.
3. TRR mode self-clears after ^{t}MRD + ^{t}RP measured from the third BAn precharge PRE3 at clock edge Th4.
4. TRR mode or any other activity can be re-engaged after ^{t}RP + ^{t}MRD from the third BAn precharge PRE3. PRE_ALL also counts if it is issued instead of PREn. TRR mode is cleared by the device after PRE3 to the BAn bank.
5. ACTIVATE commands to BAn during TRR mode do not provide refresh support (the refresh counter is unaffected).
6. The device must restore the degraded row(s) caused by excessive activation of the targeted row (TRn) necessary to meet refresh requirements.
7. A new TRR mode must wait ^{t}MRD + ^{t}RP time after the third precharge.
8. BAn may not be used with any other command.
9. ACT and PRE are the only allowed commands to BAn during TRR mode.
10. REFRESH commands are not allowed during TRR mode.

Micron Technology, Inc. reserves the right to change products or specifications without notice.
© 2017 Micron Technology, Inc. All rights reserved.

11. All timings are to be met by DRAM during TRR mode, such as ^{t}FAW. Issuing ACT1, ACT2, and ACT3 counts towards ^{t}FAW budget.

Post-Package Repair

The device has fail row address repair as an optional post-package repair (PPR) feature and it is readable through MR25 OP[7:0].

PPR provides simple and easy repair method in the system and fail row address can be repaired by the electrical programming of Electrical-fuse scheme. The device can correct one row per bank with PPR.

Electrical-fuse cannot be switched back to un-fused states once it is programmed. The controller should prevent unintended PPR mode entry and repair.

Failed Row Address Repair

1. Before entering PPR mode, all banks must be precharged.
2. Enable PPR using MR4 OP[4] = 1 and wait ^{t}MRD.
3. Issue ACT command with fail row address.
4. Wait ^{t}PGM to allow the device repair target row address internally then issue PRECHARGE
5. Wait ^{t}PGM_EXIT after PRECHARGE, which allows the device to recognize repaired row address RAn.
6. Exit PPR mode with setting MR4 OP[4] = 0.
7. The device is ready for any valid command after ^{t}PGMPST.
8. In more than one fail address repair case, repeat step 2 to 7.

Once PPR mode is exited, to confirm whether the target row has correctly repaired, the host can verify the repair by writing data into the target row and reading it back after PPR exit with MR4 OP[4] = 0 and ^{t}PGMPST.

The following timing diagram shows PPR operation.

Micron Technology, Inc. reserves the right to change products or specifications without notice.
© 2017 Micron Technology, Inc. All rights reserved.

Figure 144: Post-Package Repair Timing

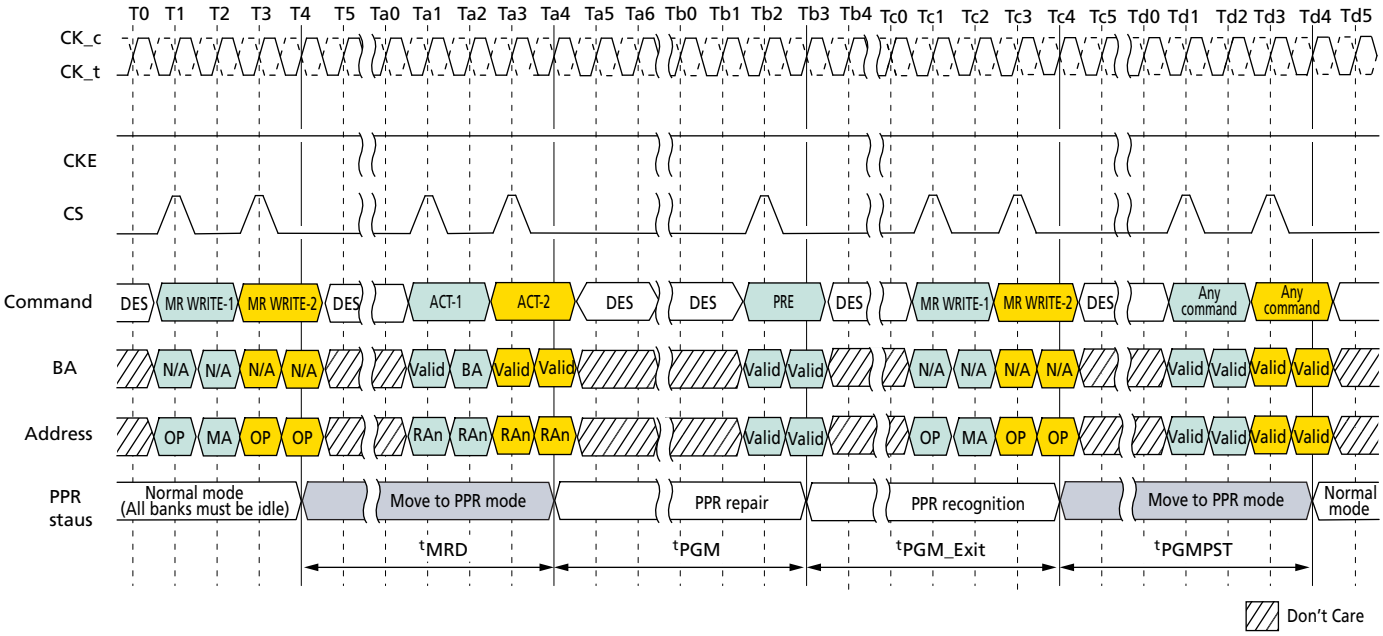

Notes:
1. During ^{t}PGM, any other commands (including refresh) are not allowed on each die.
2. With one PPR command, only one row can be repaired at one time per die.
3. When PPR procedure completes, reset procedure is required before normal operation.
4. During PPR, memory contents are not refreshed and may be lost.

Table 149: Post-Package Repair Timing Parameters

Parameter	Symbol	Min	Max	Units
PPR programming time	^{t}PGM	1000	–	ms
PPR exit time	^{t}PGM_EXIT	15	–	ns
New address setting time	^{t}PGMPST	50	–	µs

Micron Technology, Inc. reserves the right to change products or specifications without notice.
© 2017 Micron Technology, Inc. All rights reserved.

Read Preamble Training

Read preamble training is supported through the MPC function.

This mode can be used to train or read level the DQS receivers. After read preamble training is enabled by MR13 OP[1] = 1, the device will drive DQS_t LOW and DQS_c HIGH within ^{t}SDO and remain at these levels until an MPC[READ DQ CALIBRATION] command is issued.

During read preamble training, the DQS preamble provided during normal operation will not be driven by the device. After the MPC[READ DQ CALIBRATION] command is issued, the device will drive DQS_t/DQS_c and DQ like a normal READ burst after RL and ^{t}DQSCK. Prior to the MPC[READ DQ CALIBRATION] command, the device may or may not drive DQ[15:0] in this mode.

While in read preamble training mode, only READ DQ CALIBRATION commands may be issued.

- Issue an MPC[READ DQ CALIBRATION] command followed immediately by a CAS-2 command.
- Each time an MPC[READ DQ CALIBRATION] command followed by a CAS-2 is received by the device, a 16-bit data burst will, after the currently set RL, drive the eight bits programmed in MR32 followed by the eight bits programmed in MR40 on all I/O pins.
- The data pattern will be inverted for I/O pins with a 1 programmed in the corresponding invert mask mode register bit.
- Note that the pattern is driven on the DMI pins, but no DATA BUS INVERSION function is enabled, even if read DBI is enabled in the DRAM mode register.
- This command can be issued every ^{t}CCD seamlessly.
- The operands received with the CAS-2 command must be driven LOW.

Read preamble training is exited within ^{t}SDO after setting MR13 OP[1] = 0.

Figure 145: Read Preamble Training

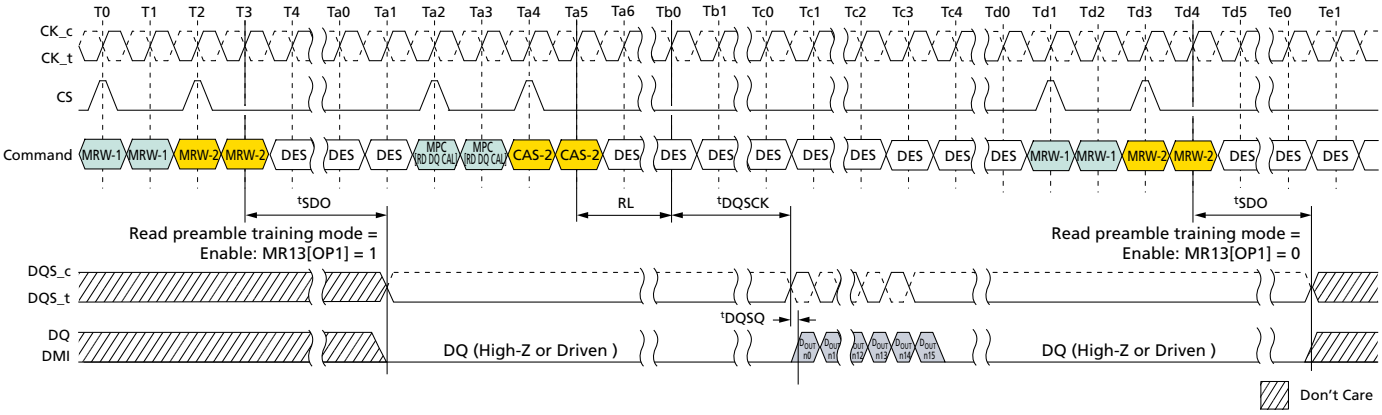

Note: 1. Read DQ calibration supports only BL16 operation.

Micron Technology, Inc. reserves the right to change products or specifications without notice.
© 2017 Micron Technology, Inc. All rights reserved.

Electrical Specifications

Absolute Maximum Ratings

Stresses greater than those listed in the table below may cause permanent damage to the device. This is a stress rating only, and functional operation of the device at these conditions, or any other conditions outside those indicated in the operational sections of this document, is not implied. Exposure to absolute maximum rating conditions for extended periods may adversely affect reliability.

Table 150: Absolute Maximum DC Ratings

Parameter	Symbol	Min	Max	Unit	Notes
V_{DD1} supply voltage relative to V_{SS}	V_{DD1}	–0.4	2.1	V	1
V_{DD2} supply voltage relative to V_{SS}	V_{DD2}	–0.4	1.5	V	1
V_{DDQ} supply voltage relative to V_{SS}	V_{DDQ}	–0.4	1.5	V	1
Voltage on any ball relative to V_{SS}	V_{IN}, V_{OUT}	–0.4	1.5	V	
Storage temperature	T_{STG}	–55	125	°C	2

Notes:
1. For information about relationships between power supplies, see the Voltage Ramp and Device Initialization section.
2. Storage temperature is the case surface temperature on the center/top side of the device. For measurement conditions, refer to the JESD51-2 standard.

AC and DC Operating Conditions

Operation or timing that is not specified is illegal. To ensure proper operation, the device must be initialized properly.

Table 151: Recommended DC Operating Conditions

Symbol	Min	Typ	Max	DRAM	Unit	Notes
V_{DD1}	1.7	1.8	1.95	Core 1 power	V	1, 2
V_{DD2}	1.06	1.1	1.17	Core 2 power/Input buffer power	V	1, 2, 3
V_{DDQ}	0.57	0.60	0.65	I/O buffer power	V	2, 3

Notes:
1. V_{DD1} uses significantly less power than V_{DD2}.
2. The voltage range is for DC voltage only. DC voltage is the voltage supplied at the DRAM and is inclusive of all noise up to 20 MHz at the DRAM package ball.
3. The voltage noise tolerance from DC to 20 MHz exceeding a peak-to-peak tolerance of 45mV at the DRAM ball is not included in the TdIVW.

Table 152: Input Leakage Current

Parameter/Condition	Symbol	Min	Max	Unit	Notes
Input leakage current	I_L	–4	4	µA	1, 2

Notes:
1. For CK_t, CK_c, CKE, CS, CA, ODT_CA and RESET_n. Any input $0V \le V_{IN} \le V_{DD2}$. All other pins not under test = 0V.

Micron Technology, Inc. reserves the right to change products or specifications without notice.
© 2017 Micron Technology, Inc. All rights reserved.

2. CA ODT is disabled for CK_t, CK_c, CS, and CA.

Table 153: Input/Output Leakage Current

Parameter/Condition	Symbol	Min	Max	Unit	Notes
Input/Output leakage current	I_{OZ}	–5	5	µA	1, 2

Notes:
1. For DQ, DQS_t, DQS_c and DMI. Any I/O 0V ≤ V_{OUT} ≤ V_{DDQ}.
2. I/Os status are disabled: High impedance and ODT off.

Table 154: Operating Temperature Range

Parameter/Condition	Symbol	Min	Max	Unit
Standard	T_{OPER}	Note 4	85	˚C
Elevated		85	95	˚C
Automotive		95	105	˚C
Ultra		105	125	˚C

Notes:
1. Operating temperature is the case surface temperature at the center of the top side of the device. For measurement conditions, refer to the JESD51-2 standard.
2. When using the device in the elevated temperature range, some derating may be required. See Mode Registers for vendor-specific derating.
3. Either the device case temperature rating or the temperature sensor can be used to set an appropriate refresh rate, determine the need for AC timing derating, and/or monitor the operating temperature (see Temperature Sensor). When using the temperature sensor, the actual device case temperature may be higher than the T_{OPER} rating that applies for the standard or elevated temperature range. For example, T_{CASE} could be above +85˚C when the temperature sensor indicates a temperature of less than +85˚C.
4. Refer to operating temperature range on top page.

Micron Technology, Inc. reserves the right to change products or specifications without notice.
© 2017 Micron Technology, Inc. All rights reserved.

AC and DC Input Measurement Levels

Input Levels for CKE

Table 155: Input Levels

Parameter	Symbol	Min	Max	Unit	Notes
Input HIGH level (AC)	$V_{IH(AC)}$	0.75 × V_{DD2}	V_{DD2} + 0.2	V	1
Input LOW level (AC)	$V_{IL(AC)}$	–0.2	0.25 × V_{DD2}	V	1
Input HIGH level (DC)	$V_{IH(DC)}$	0.65 × V_{DD2}	V_{DD2} + 0.2	V	
Input LOW level (DC)	$V_{IL(DC)}$	–0.2	0.35 × V_{DD2}	V	

Note: 1. See the AC Overshoot and Undershoot section.

Figure 146: Input Timing Definition for CKE

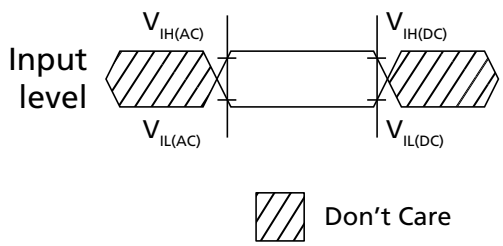

Input Levels for RESET_n

Table 156: Input Levels

Parameter	Symbol	Min	Max	Unit	Notes
Input HIGH level	V_{IH}	0.80 × V_{DD2}	V_{DD2} + 0.2	V	1
Input LOW level	V_{IL}	–0.2	0.20 × V_{DD2}	V	1

Note: 1. See the AC Overshoot and Undershoot section.

Figure 147: Input Timing Definition for RESET_n

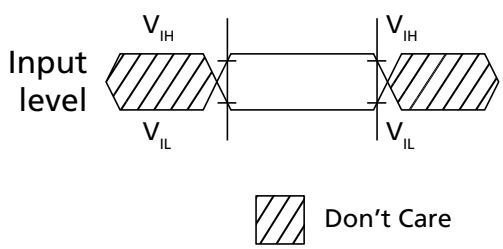

Differential Input Voltage for CK

The minimum input voltage needs to satisfy both V_{indiff_CK} and $V_{indiff_CK}/2$ specification at input receiver and their measurement period is $1^{t}CK$. V_{indiff_CK} is the peak-to-peak

Micron Technology, Inc. reserves the right to change products or specifications without notice.
© 2017 Micron Technology, Inc. All rights reserved.

voltage centered on 0 volts differential and $V_{indiff_CK}/2$ is maximum and minimum peak voltage from 0 volts.

Figure 148: CK Differential Input Voltage

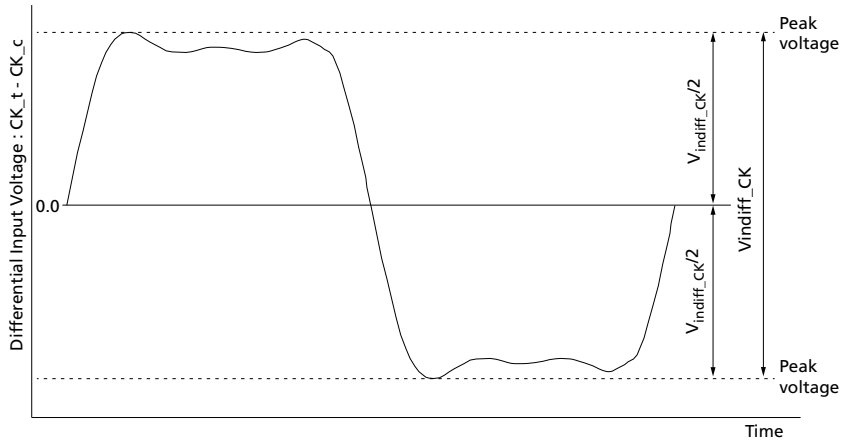

Table 157: CK Differential Input Voltage

Parameter	Symbol	1600/1867		2133/2400/3200		3733/4267		Unit	Note
		Min	Max	Min	Max	Min	Max		
CK differential input voltage	V_{indiff_CK}	420	–	380	–	360	–	mV	1

Note: 1. The peak voltage of differential CK signals is calculated in a following equation.

- V_{indiff_CK} = (Maximum peak voltage) - (Minimum peak voltage)
- Maximum peak voltage = MAX(f(t))
- Minimum peak voltage = MIN(f(t))
- f(t) = V_{CK_t} - V_{CK_c}

Peak Voltage Calculation Method

The peak voltage of differential clock signals are calculated in a following equation.

- $V_{IH.DIFF.peak}$ voltage = MAX(f(t))
- $V_{IL.DIFF.peak}$ voltage = MIN(f(t))
- f(t) = V_{CK_t} - V_{CK_c}

Micron Technology, Inc. reserves the right to change products or specifications without notice.
© 2017 Micron Technology, Inc. All rights reserved.

Figure 149: Definition of Differential Clock Peak Voltage

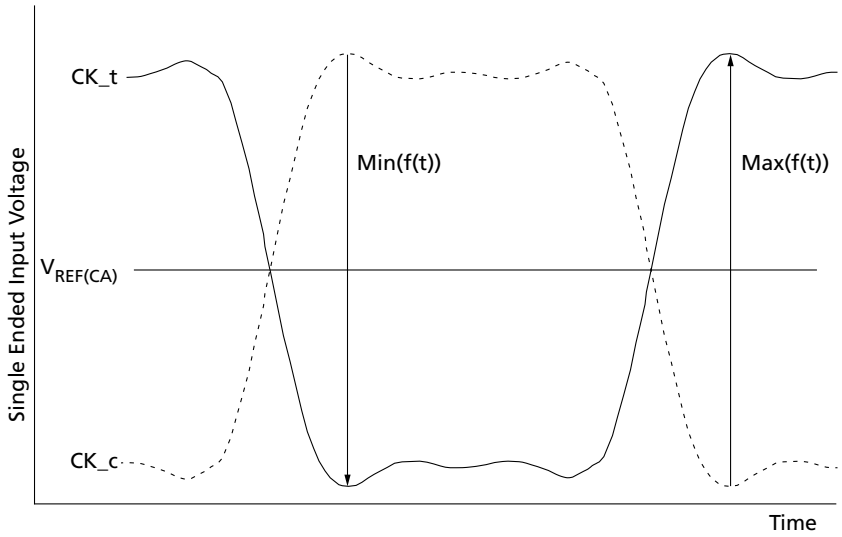

Note: 1. $V_{REF(CA)}$ is device internal setting value by V_{REF} training.

Single-Ended Input Voltage for Clock

The minimum input voltage need to satisfy V_{inse_CK}, $V_{inse_CK_HIGH}$, and $V_{inse_CK_LOW}$ specification at input receiver.

Figure 150: Clock Single-Ended Input Voltage

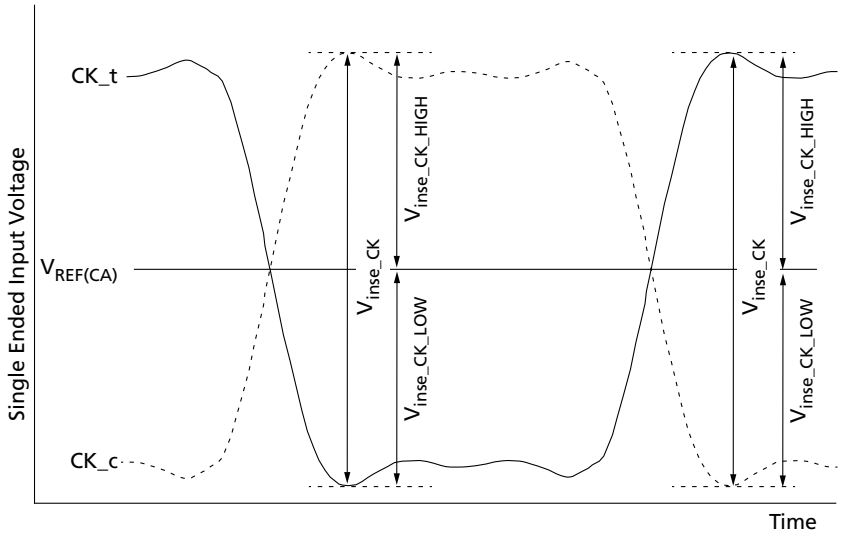

Note: 1. $V_{REF(CA)}$ is device internal setting value by V_{REF} training.

Micron Technology, Inc. reserves the right to change products or specifications without notice.
© 2017 Micron Technology, Inc. All rights reserved.

Table 158: Clock Single-Ended Input Voltage

Parameter	Symbol	1600/1867		2133/2400/3200		3733/4267		Unit
		Min	Max	Min	Max	Min	Max	
Clock single-ended input voltage	V_{inse_CK}	210	–	190	–	180	–	mV
Clock single-ended input voltage HIGH from $V_{REF(CA)}$	$V_{inse_CK_HIGH}$	105	–	95	–	90	–	mV
Clock single-ended input voltage LOW from $V_{REF(CA)}$	$V_{inse_CK_LOW}$	105	–	95	–	90	–	mV

Differential Input Slew Rate Definition for Clock

Input slew rate for differential signals (CK_t, CK_c) are defined and measured as shown below in figure and the tables.

Figure 151: Differential Input Slew Rate Definition for CK_t, CK_c

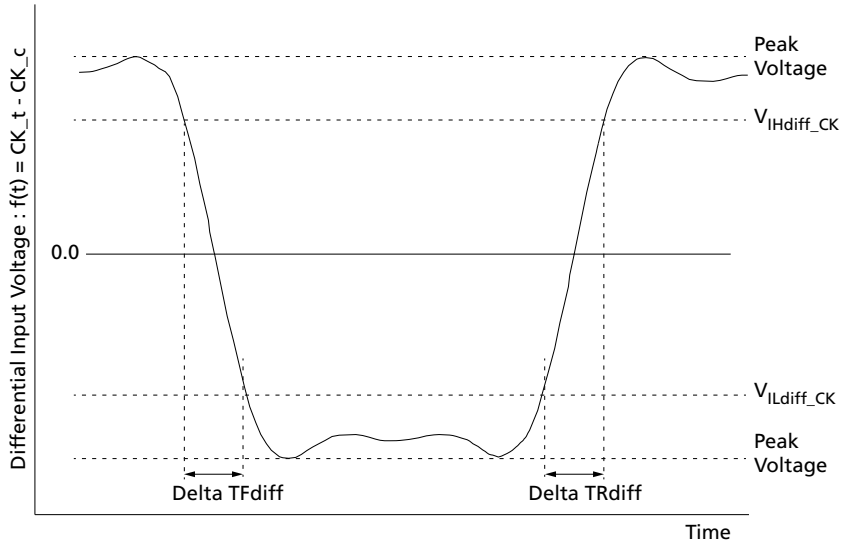

Notes:
1. Differential signal rising edge from V_{ILdiff_CK} to V_{IHdiff_CK} must be monotonic slope.
2. Differential signal falling edge from V_{IHdiff_CK} to V_{ILdiff_CK} must be monotonic slope.

Table 159: Differential Input Slew Rate Definition for CK_t, CK_c

Description	From	To	Defined by
Differential input slew rate for rising edge (CK_t - CK_c)	V_{ILdiff_CK}	V_{IHdiff_CK}	$\lvert V_{ILdiff_CK} - V_{IHdiff_CK}\rvert / \Delta TRdiff$
Differential input slew rate for falling edge (CK_t - CK_c)	V_{IHdiff_CK}	V_{ILdiff_CK}	$\lvert V_{ILdiff_CK} - V_{IHdiff_CK}\rvert / \Delta TFdiff$

Micron Technology, Inc. reserves the right to change products or specifications without notice.
© 2017 Micron Technology, Inc. All rights reserved.

Table 160: Differential Input Level for CK_t, CK_c

Parameter	Symbol	1600/1867		2133/2400/3200		3733/4267		Unit
		Min	Max	Min	Max	Min	Max	
Differential Input HIGH	V_{IHdiff_CK}	175	–	155	–	145	–	mV
Differential Input LOW	V_{ILdiff_CK}	–	–175	–	–155	–	–145	mV

Table 161: Differential Input Slew Rate for CK_t, CK_c

Parameter	Symbol	1600/1867		2133/2400/3200		3733/4267		Unit
		Min	Max	Min	Max	Min	Max	
Differential input slew rate for clock	SRIdiff_CK	2	14	2	14	2	14	V/ns

Differential Input Cross-Point Voltage

The cross-point voltage of differential input signals (CK_t, CK_c) must meet the requirements in table below. The differential input cross-point voltage V_{IX} is measured from the actual cross-point of true and complement signals to the mid level that is $V_{REF(CA)}$.

Figure 152: V_{ix} Definition (Clock)

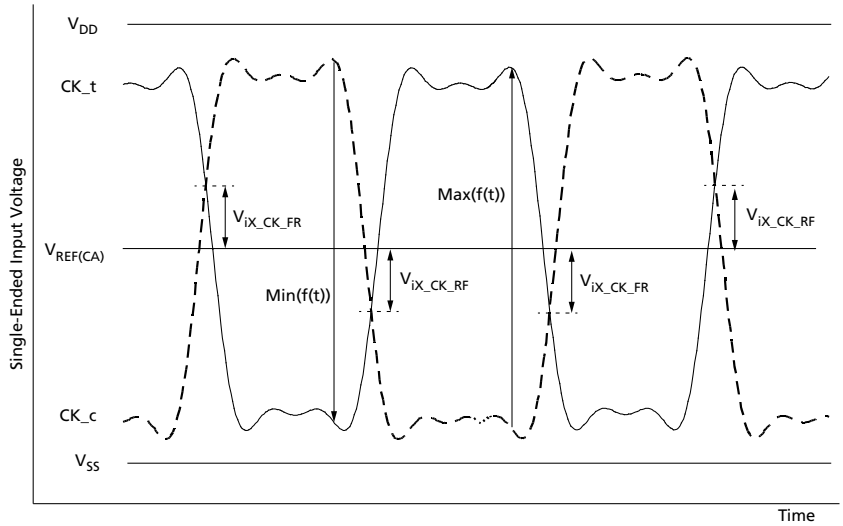

Note: 1. The base levels of $V_{ix_CK_FR}$ and $V_{ix_CK_RF}$ are $V_{REF(CA)}$ that is device internal setting value by V_{REF} training.

Micron Technology, Inc. reserves the right to change products or specifications without notice.
© 2017 Micron Technology, Inc. All rights reserved.

Table 162: Cross-Point Voltage for Differential Input Signals (Clock)

Notes 1 and 2 apply to entire table

Parameter	Symbol	1600/1867		2133/2400/3200		3733/4267		Unit
		Min	Max	Min	Max	Min	Max	
Clock differential input cross-point voltage ratio	$V_{ix_CK_ratio}$	–	25	–	25	–	25	%

Notes: 1. $V_{ix_CK_ratio}$ is defined by this equation: $V_{ix_CK_ratio} = V_{ix_CK_FR}/|MIN(f(t))|$
2. $V_{ix_CK_ratio}$ is defined by this equation: $V_{ix_CK_ratio} = V_{ix_CK_RF}/MAX(f(t))$

Differential Input Voltage for DQS

The minimum input voltage needs to satisfy both V_{indiff_DQS} and $V_{indiff_DQS}/2$ specification at input receiver and their measurement period is 1UI ($^tCK/2$). V_{indiff_DQS} is the peak to peak voltage centered on 0 volts differential and $V_{indiff_DQS}/2$ is maximum and minimum peak voltage from 0 volts.

Figure 153: DQS Differential Input Voltage

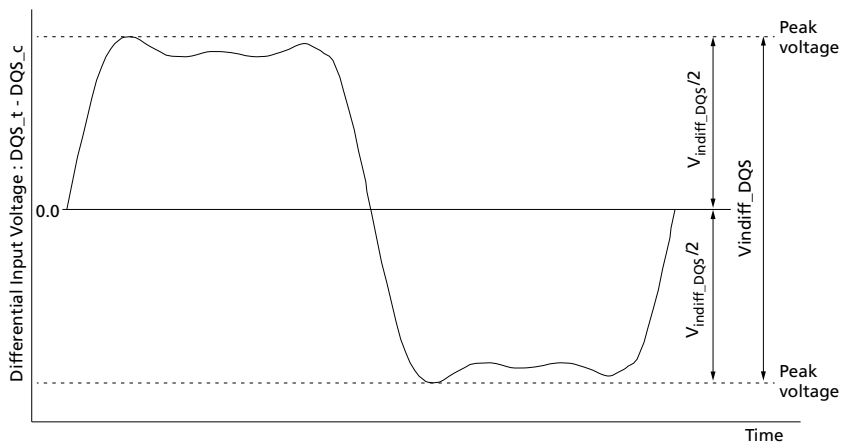

Table 163: DQS Differential Input Voltage

Parameter	Symbol	1600/1867		2133/2400/3200		3733/4267		Unit	Note
		Min	Max	Min	Max	Min	Max		
DQS differential input voltage	V_{indiff_DQS}	360	–	360	–	340	–	mV	1

Note: 1. The peak voltage of differential DQS signals is calculated in a following equation.

- V_{indiff_DQS} = (Maximum peak voltage) - (Minimum peak voltage)
- Maximum peak voltage = MAX(f(t))
- Minimum peak voltage = MIN(f(t))
- $f(t) = V_{DQS_t} - V_{DQS_c}$

Peak Voltage Calculation Method

The peak voltage of differential DQS signals are calculated in a following equation.

Micron Technology, Inc. reserves the right to change products or specifications without notice.
© 2017 Micron Technology, Inc. All rights reserved.

- $V_{IH.DIFF.peak}$ voltage = MAX(f(t))
- $V_{IL.DIFF.peak}$ voltage = MIN(f(t))
- f(t) = V_{DQS_t} - V_{DQS_c}

Figure 154: Definition of Differential DQS Peak Voltage

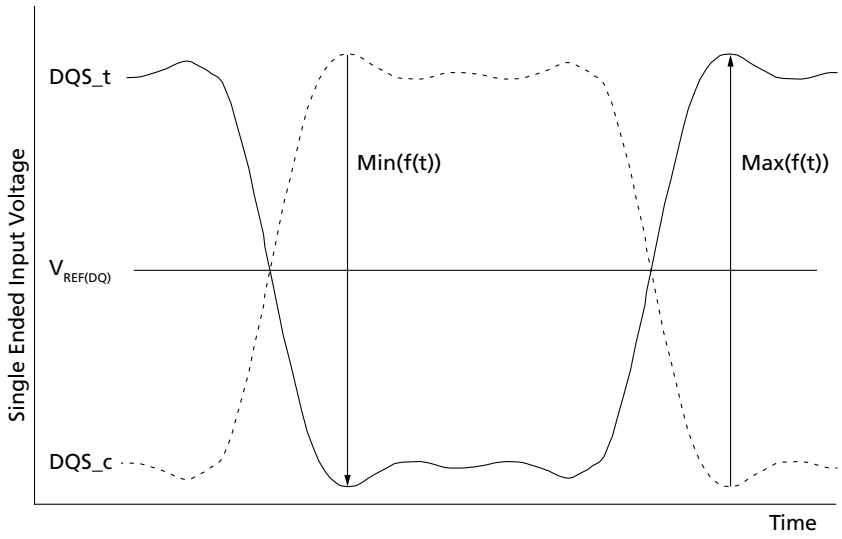

Note: 1. $V_{REF(DQ)}$ is device internal setting value by V_{REF} training.

Single-Ended Input Voltage for DQS

The minimum input voltage need to satisfy V_{inse_DQS}, $V_{inse_DQS_HIGH}$, and $V_{inse_DQS_LOW}$ specification at input receiver.

Figure 155: DQS Single-Ended Input Voltage

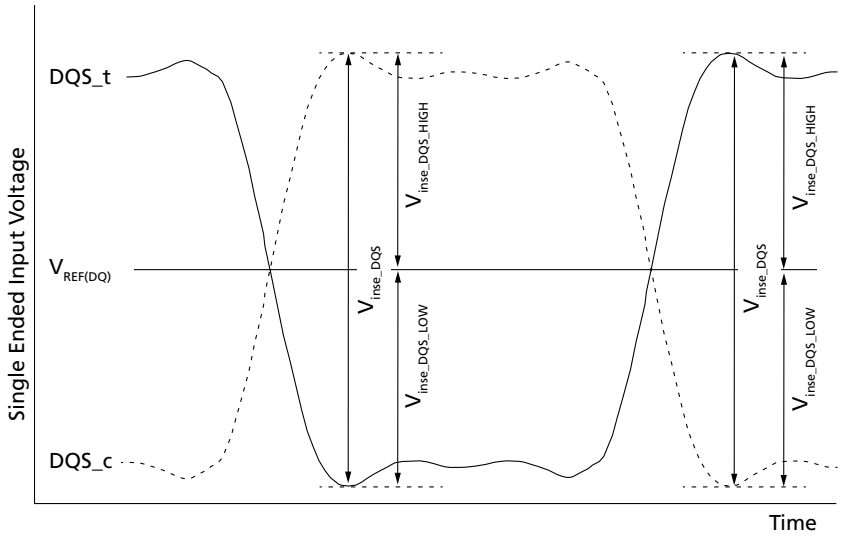

Note: 1. $V_{REF(DQ)}$ is device internal setting value by V_{REF} training.

Micron Technology, Inc. reserves the right to change products or specifications without notice.
© 2017 Micron Technology, Inc. All rights reserved.

Table 164: DQS Single-Ended Input Voltage

Parameter	Symbol	1600/1867		2133/2400/3200		3733/4267		Unit
		Min	Max	Min	Max	Min	Max	
DQS single-ended input voltage	V_{inse_DQS}	180	–	180	–	170	–	mV
DQS single-ended input voltage HIGH from $V_{REF(DQ)}$	$V_{inse_DQS_HIGH}$	90	–	90	–	85	–	mV
DQS single-ended input voltage LOW from $V_{REF(DQ)}$	$V_{inse_DQS_LOW}$	90	–	90	–	85	–	mV

Differential Input Slew Rate Definition for DQS

Input slew rate for differential signals (DQS_t, DQS_c) are defined and measured as shown below in figure and the tables.

Figure 156: Differential Input Slew Rate Definition for DQS_t, DQS_c

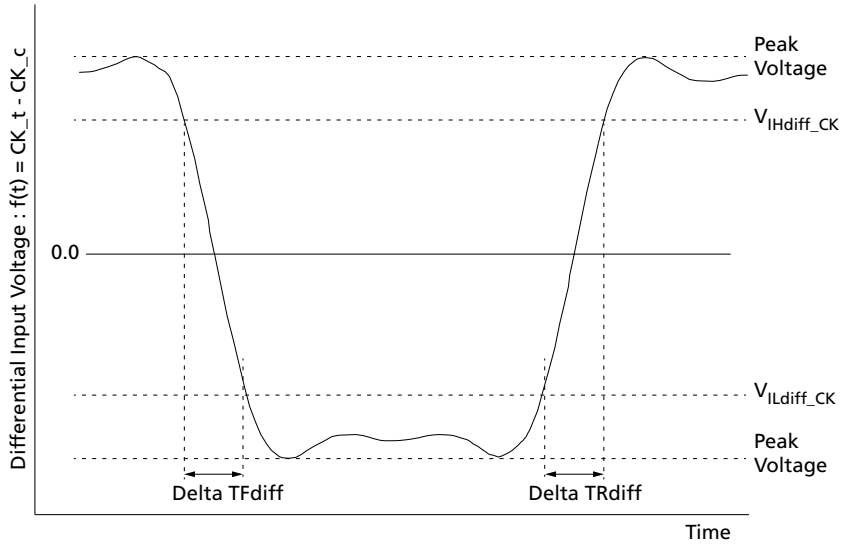

Notes: 1. Differential signal rising edge from V_{ILdiff_DQS} to V_{IHdiff_DQS} must be monotonic slope.
2. Differential signal falling edge from V_{IHdiff_DQS} to V_{ILdiff_DQS} must be monotonic slope.

Table 165: Differential Input Slew Rate Definition for DQS_t, DQS_c

Description	From	To	Defined by
Differential input slew rate for rising edge (DQS_t - DQS_c)	V_{ILdiff_DQS}	V_{IHdiff_DQS}	$\lvert V_{ILdiff_DQS} - V_{IHdiff_DQS}\rvert / \Delta TRdiff$
Differential input slew rate for falling edge (DQS_t - DQS_c)	V_{IHdiff_DQS}	V_{ILdiff_DQS}	$\lvert V_{ILdiff_DQS} - V_{IHdiff_DQS}\rvert / \Delta TFdiff$

Micron Technology, Inc. reserves the right to change products or specifications without notice.
© 2017 Micron Technology, Inc. All rights reserved.

Table 166: Differential Input Level for DQS_t, DQS_c

Parameter	Symbol	1600/1867		2133/2400/3200		3733/4267		Unit
		Min	Max	Min	Max	Min	Max	
Differential Input HIGH	V_{IHdiff_DQS}	140	–	140	–	120	–	mV
Differential Input LOW	V_{ILdiff_DQS}	–	–140	–	–140	–	–120	mV

Table 167: Differential Input Slew Rate for DQS_t, DQS_c

Parameter	Symbol	1600/1867		2133/2400/3200		3733/4267		Unit
		Min	Max	Min	Max	Min	Max	
Differential input slew rate	SRIdiff	2	14	2	14	2	14	V/ns

Differential Input Cross-Point Voltage

The cross-point voltage of differential input signals (DQS_t, DQS_c) must meet the requirements in table below. The differential input cross-point voltage V_{IX} is measured from the actual cross-point of true and complement signals to the mid level that is $V_{REF(DQ)}$.

Figure 157: V_{ix} Definition (DQS)

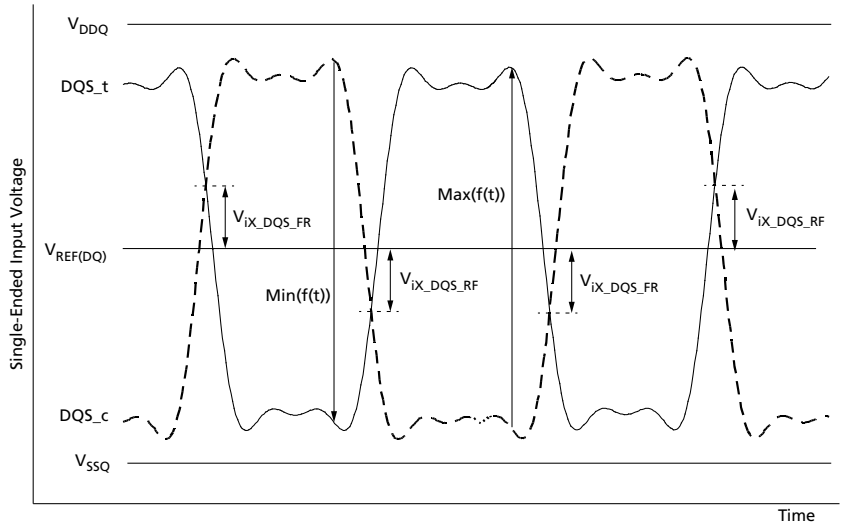

Note: 1. The base levels of $V_{ix_DQS_FR}$ and $V_{ix_DQS_RF}$ are $V_{REF(DQ)}$ that is device internal setting value by V_{REF} training.

Micron Technology, Inc. reserves the right to change products or specifications without notice.
© 2017 Micron Technology, Inc. All rights reserved.

Table 168: Cross-Point Voltage for Differential Input Signals (DQS)

Notes 1 and 2 apply to entire table

Parameter	Symbol	1600/1867		2133/2400/3200		3733/4267		Unit
		Min	Max	Min	Max	Min	Max	
DQS differential input cross-point voltage ratio	$V_{ix_DQS_ratio}$	–	20	–	20	–	20	%

Notes:
1. $V_{ix_DQS_ratio}$ is defined by this equation: $V_{ix_DQS_ratio} = V_{ix_DQS_FR}/|MIN(f(t))|$
2. $V_{ix_DQS_ratio}$ is defined by this equation: $V_{ix_DQS_ratio} = V_{ix_DQS_RF}/MAX(f(t))$

Input Levels for ODT_CA

Table 169: Input Levels for ODT_CA

Parameter	Symbol	Min	Max	Unit
ODT input HIGH level	V_{IHODT}	$0.75 \times V_{DD2}$	$V_{DD2} + 0.2$	V
ODT input LOW level	V_{ILODT}	–0.2	$0.25 \times V_{DD2}$	V

Output Slew Rate and Overshoot/Undershoot specifications

Single-Ended Output Slew Rate

Table 170: Single-Ended Output Slew Rate

Note 1-5 applies to entire table

Parameter	Symbol	Value		Units
		Min	Max	
Single-ended output slew rate ($V_{OH} = V_{DDQ}$ x 0.5)	SRQse	3.0	9.0	V/ns
Output slew rate matching ratio (rise to fall)	–	0.8	1.2	–

Notes:
1. SR = Slew rate; Q = Query output; se = Single-ended signal.
2. Measured with output reference load.
3. The ratio of pull-up to pull-down slew rate is specified for the same temperature and voltage, over the entire temperature and voltage range. For a given output, it represents the maximum difference between pull-up and pull-down drivers due to process variation.
4. The output slew rate for falling and rising edges is defined and measured between $V_{OL(AC)} = 0.2 \times V_{OH(DC)}$ and $V_{OH(AC)} = 0.8 \times V_{OH(DC)}$.
5. Slew rates are measured under average SSO conditions with 50% of the DQ signals per data byte switching.

Micron Technology, Inc. reserves the right to change products or specifications without notice.
© 2017 Micron Technology, Inc. All rights reserved.

Figure 158: Single-Ended Output Slew Rate Definition

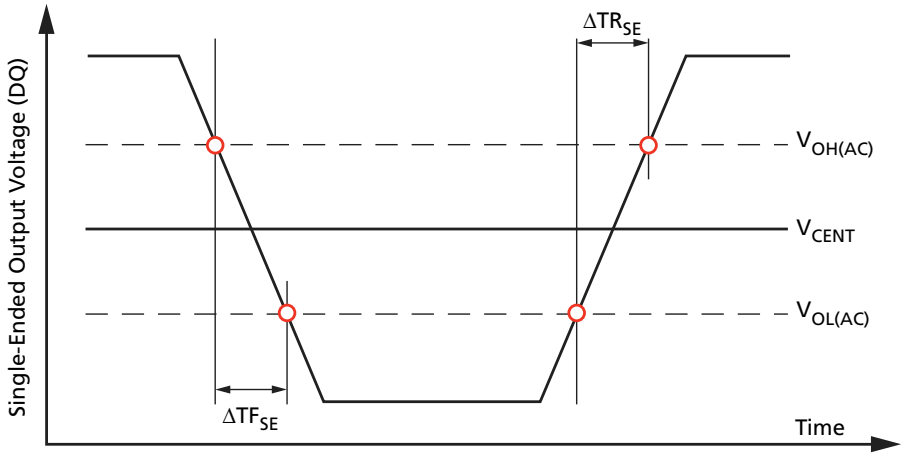

Differential Output Slew Rate

Table 171: Differential Output Slew Rate

Note 1-4 applies to entire table

Parameter	Symbol	Value		Units
		Min	Max	
Differential output slew rate ($V_{OH} = V_{DDQ}$ x 0.5)	SRQdiff	6	18	V/ns

Notes:
1. SR = Slew rate; Q = Query output; se = Differential signal.
2. Measured with output reference load.
3. The output slew rate for falling and rising edges is defined and measured between $V_{OL(AC)} = -0.8 \times V_{OH(DC)}$ and $V_{OH(AC)} = 0.8 \times V_{OH(DC)}$.
4. Slew rates are measured under average SSO conditions with 50% of the DQ signals per data byte switching.

Figure 159: Differential Output Slew Rate Definition

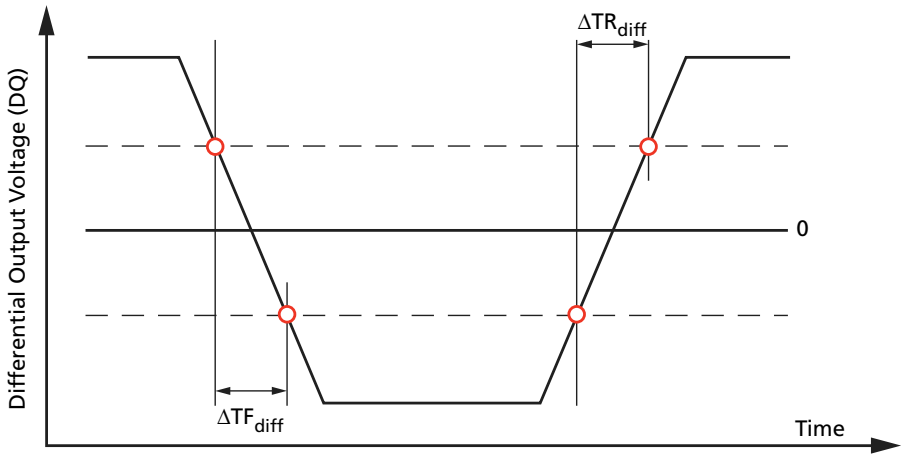

Micron Technology, Inc. reserves the right to change products or specifications without notice.
© 2017 Micron Technology, Inc. All rights reserved.

Overshoot and Undershoot Specifications

Table 172: AC Overshoot/Undershoot Specifications

Parameter		1600	1866	3200	3733	4267	Unit
Maximum peak amplitude provided for overshoot area	MAX	0.3	0.3	0.3	0.3	0.3	V
Maximum peak amplitude provided for undershoot area	MAX	0.3	0.3	0.3	0.3	0.3	V
Maximum area above V_{DD}/ V_{DDQ}	MAX	0.1	0.1	0.1	0.1	0.1	V-ns
Maximum area below V_{SS}/ V_{SSQ}	MAX	0.1	0.1	0.1	0.1	0.1	V-ns

Notes:
1. V_{DD} stands for V_{DD2} for CA[5:0], CK_t, CS_n, CKE, and ODT. V_{DD} stands for V_{DDQ} for DQ, DMI, DQS_t, and DQS_c.
2. V_{SS} stands for V_{SS} for CA[5:0], CK_t, CK_c, CS_n, CKE, and ODT. V_{SS} stands for V_{SSQ} for DQ, DMI, DQS_t, and DQS_c.
3. Maximum peak amplitude values are referenced from actual V_{DD} and V_{SS} values.
4. Maximum area values are referenced from maximum V_{DD} and V_{SS} values.

Table 173: Overshoot/Undershoot Specification for CKE and RESET

Parameter	Specification
Maximum peak amplitude provided for overshoot area	0.35V
Maximum peak amplitude provided for undershoot area	0.35V
Maximum area above V_{DD}	0.8 V-ns
Maximum area below V_{SS}	0.8 V-ns

Figure 160: Overshoot and Undershoot Definition

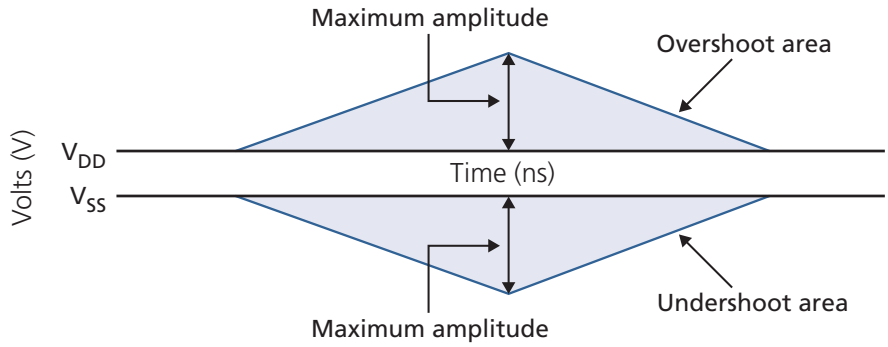

Driver Output Timing Reference Load

Timing reference loads are not intended as a precise representation of any particular system environment or depiction of an actual load presented by a production tester. System designers should use IBIS or other simulation tools to correlate the timing reference load to a system environment. Manufacturers correlate to their production test conditions, generally one or more coaxial transmission lines terminated at the tester electronics.

Micron Technology, Inc. reserves the right to change products or specifications without notice.
© 2017 Micron Technology, Inc. All rights reserved.

Figure 161: Driver Output Timing Reference Load

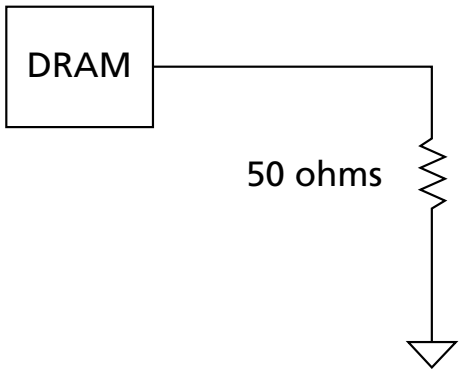

Note: 1. All output timing parameter values are reported with respect to this reference load; this reference load is also used to report slew rate.

LVSTL I/O System

LVSTL I/O cells are comprised of a driver pull-up and pull-down and a terminator.

Figure 162: LVSTL I/O Cell

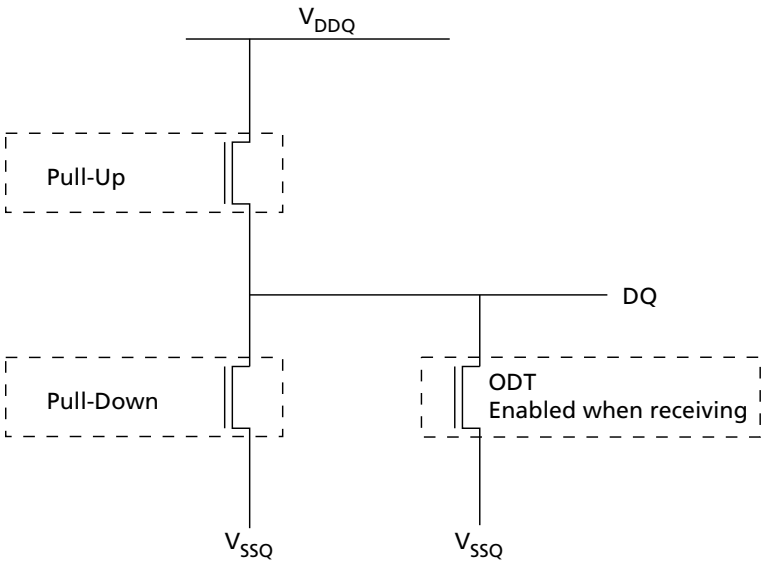

To ensure that the target impedance is achieved, calibrate the LVSTL I/O cell as following example:

1. Calibrate the pull-down device against a 240 ohm resistor to V_{DDQ} via the ZQ pin.

- Set strength control to minimum setting
- Increase drive strength until comparator detects data bit is less than $V_{DDQ}/2$
- NMOS pull-down device is calibrated to 240 ohms

2. Calibrate the pull-up device against the calibrated pull-down device.

- Set V_{OH} target and NMOS controller ODT replica via MRS (V_{OH} can be automatically controlled by ODT MRS)

Micron Technology, Inc. reserves the right to change products or specifications without notice.
© 2017 Micron Technology, Inc. All rights reserved.

- Set strength control to minimum setting
- Increase drive strength until comparator detects data bit is greater than V_{OH} target
- NMOS pull-up device is calibrated to V_{OH} target

Figure 163: Pull-Up Calibration

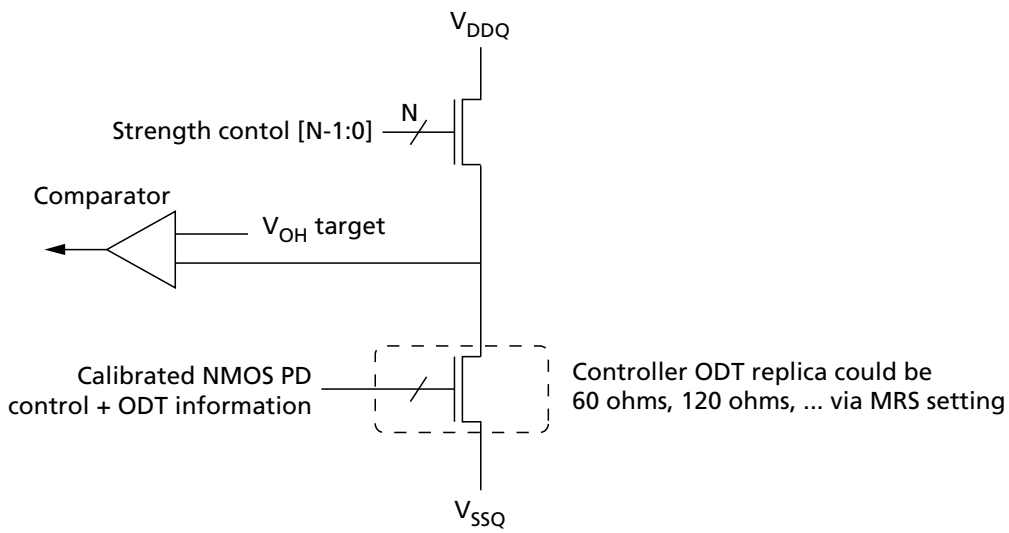

Input/Output Capacitance

Table 174: Input/Output Capacitance

Notes 1 and 2 apply to entire table

Parameter	Symbol	Min	Max	Unit	Notes
Input capacitance, CK_t and CK_c	C_{CK}	0.5	0.9	pF	
Input capacitance delta, CK_t and CK_c	C_{DCK}	0	0.09		3
Input capacitance, all other input-only pins	C_I	0.5	0.9		4
Input capacitance delta, all other input-only pins	C_{DI}	–0.1	0.1		5
Input/output capacitance, DQ, DMI, DQS_t, DQS_c	C_{IO}	0.7	1.3		6
Input/output capacitance delta, DQS_t, DQS_c	C_{DDQS}	0	0.1		7
Input/output capacitance delta, DQ, DMI	C_{DIO}	–0.1	0.1		8
Input/output capacitance, ZQ pin	C_{ZQ}	0	5.0		

Notes:
1. This parameter applies to LPDDR4 die only (does not include package capacitance).
2. This parameter is not subject to production testing; It is verified by design and characterization. The capacitance is measured according to JEP147 (procedure for measuring input capacitance using a vector network analyzer), with V_{DD1}, V_{DD2}, V_{DDQ}, and V_{SS} applied; All other pins are left floating.
3. Absolute value of $C_{CK_t} - C_{CK_c}$.
4. C_I applies to CS, CKE, and CA[5:0].
5. $C_{DI} = C_I - 0.5 \times (C_{CK_t} + C_{CK_c})$; It does not apply to CKE.
6. DMI loading matches DQ and DQS.
7. Absolute value of C_{DQS_t} and C_{DQS_c}.

Micron Technology, Inc. reserves the right to change products or specifications without notice.
© 2017 Micron Technology, Inc. All rights reserved.

8. $C_{DIO} = C_{IO} - \text{Average}(C_{DQn}, C_{DMI}, C_{DQS_t}, C_{DQS_c})$ in byte-lane.

I_{DD} Specification Parameters and Test Conditions

Table 175: I_{DD} Measurement Conditions

Switching for CA								
CK_t edge	**R1**	**R2**	**R3**	**R4**	**R5**	**R6**	**R7**	**R8**
CKE	HIGH	HIGH	HIGH	HIGH	HIGH	HIGH	HIGH	HIGH
CS	LOW	LOW	LOW	LOW	LOW	LOW	LOW	LOW
CA0	HIGH	LOW	LOW	LOW	LOW	HIGH	HIGH	HIGH
CA1	HIGH	HIGH	HIGH	LOW	LOW	LOW	LOW	HIGH
CA2	HIGH	LOW	LOW	LOW	LOW	HIGH	HIGH	HIGH
CA3	HIGH	HIGH	HIGH	LOW	LOW	LOW	LOW	HIGH
CA4	HIGH	LOW	LOW	LOW	LOW	HIGH	HIGH	HIGH
CA5	HIGH	HIGH	HIGH	LOW	LOW	LOW	LOW	HIGH

Notes:
1. LOW = $V_{IN} \le V_{IL(DC)}$ MAX.
   HIGH = $V_{IN} \ge V_{IH(DC)}$ MIN.
   STABLE = Inputs are stable at a HIGH or LOW level.
2. CS must always be driven LOW.
3. 50% of CA bus is changing between HIGH and LOW once per clock for the CA bus.
4. The pattern is used continuously during I_{DD} measurement for I_{DD} values that require switching on the CA bus.

Table 176: CA Pattern for I_{DD4R} for BL = 16

Clock Cycle Number	CKE	CS	Command	CA0	CA1	CA2	CA3	CA4	CA5
N	HIGH	HIGH	READ-1	L	H	L	L	L	L
N+1	HIGH	LOW		L	H	L	L	L	L
N+2	HIGH	HIGH	CAS-2	L	H	L	L	H	L
N+3	HIGH	LOW		L	L	L	L	L	L
N+4	HIGH	LOW	DES	L	L	L	L	L	L
N+5	HIGH	LOW	DES	L	L	L	L	L	L
N+6	HIGH	LOW	DES	L	L	L	L	L	L
N+7	HIGH	LOW	DES	L	L	L	L	L	L
N+8	HIGH	HIGH	READ-1	L	H	L	L	L	L
N+9	HIGH	LOW		L	H	L	L	H	L
N+10	HIGH	HIGH	CAS-2	L	H	L	L	H	H
N+11	HIGH	LOW		H	H	H	H	H	H
N+12	HIGH	LOW	DES	L	L	L	L	L	L
N+13	HIGH	LOW	DES	L	L	L	L	L	L
N+14	HIGH	LOW	DES	L	L	L	L	L	L

Micron Technology, Inc. reserves the right to change products or specifications without notice.
© 2017 Micron Technology, Inc. All rights reserved.

Table 176: CA Pattern for I_{DD4R} for BL = 16 (Continued)

Clock Cycle Number	CKE	CS	Command	CA0	CA1	CA2	CA3	CA4	CA5
N+15	HIGH	LOW	DES	L	L	L	L	L	L

Notes: 1. BA[2:0] = 010; C[9:4] = 000000 or 111111; Burst order C[3:2] = 00 or 11 (same as LPDDR3 I_{DDR4R} specification).
2. CA pins are kept LOW with DES command to reduce ODT current (different from LPDDR3 I_{DDR4R} specification).

Table 177: CA Pattern for I_{DD4W} for BL = 16

Clock Cycle Number	CKE	CS	Command	CA0	CA1	CA2	CA3	CA4	CA5
N	HIGH	HIGH	WRITE-1	L	L	H	L	L	L
N+1	HIGH	LOW		L	H	L	L	L	L
N+2	HIGH	HIGH	CAS-2	L	H	L	L	H	L
N+3	HIGH	LOW		L	L	L	L	L	L
N+4	HIGH	LOW	DES	L	L	L	L	L	L
N+5	HIGH	LOW	DES	L	L	L	L	L	L
N+6	HIGH	LOW	DES	L	L	L	L	L	L
N+7	HIGH	LOW	DES	L	L	L	L	L	L
N+8	HIGH	HIGH	WRITE-1	L	L	H	L	L	L
N+9	HIGH	LOW		L	H	L	L	H	L
N+10	HIGH	HIGH	CAS-2	L	H	L	L	H	H
N+11	HIGH	LOW		L	L	H	H	H	H
N+12	HIGH	LOW	DES	L	L	L	L	L	L
N+13	HIGH	LOW	DES	L	L	L	L	L	L
N+14	HIGH	LOW	DES	L	L	L	L	L	L
N+15	HIGH	LOW	DES	L	L	L	L	L	L

Notes: 1. BA[2:0] = 010; C[9:4] = 000000 or 111111 (same as LPDDR3 I_{DDR4W} specification).
2. No burst ordering (different from LPDDR3 I_{DDR4W} specification).
3. CA pins are kept LOW with DES command to reduce ODT current (different from LPDDR3 I_{DDR4W} specification).

Table 178: Data Pattern for I_{DD4W} (DBI Off) for BL = 16

DBI Off Case										
	DQ[7]	DQ[6]	DQ[5]	DQ[4]	DQ[3]	DQ[2]	DQ[1]	DQ[0]	DBI	# of 1s
BL0	1	1	1	1	1	1	1	1	0	8
BL1	1	1	1	1	0	0	0	0	0	4
BL2	0	0	0	0	0	0	0	0	0	0
BL3	0	0	0	0	1	1	1	1	0	4

Micron Technology, Inc. reserves the right to change products or specifications without notice.
© 2017 Micron Technology, Inc. All rights reserved.

Table 178: Data Pattern for I_{DD4W} (DBI Off) for BL = 16 (Continued)

DBI Off Case										
	DQ[7]	DQ[6]	DQ[5]	DQ[4]	DQ[3]	DQ[2]	DQ[1]	DQ[0]	DBI	# of 1s
BL4	0	0	0	0	0	0	1	1	0	2
BL5	0	0	0	0	1	1	1	1	0	4
BL6	1	1	1	1	1	1	0	0	0	6
BL7	1	1	1	1	0	0	0	0	0	4
BL8	1	1	1	1	1	1	1	1	0	8
BL9	1	1	1	1	0	0	0	0	0	4
BL10	0	0	0	0	0	0	0	0	0	0
BL11	0	0	0	0	1	1	1	1	0	4
BL12	0	0	0	0	0	0	1	1	0	2
BL13	0	0	0	0	1	1	1	1	0	4
BL14	1	1	1	1	1	1	0	0	0	6
BL15	1	1	1	1	0	0	0	0	0	4
BL16	1	1	1	1	1	1	0	0	0	6
BL17	1	1	1	1	0	0	0	0	0	4
BL18	0	0	0	0	0	0	1	1	0	2
BL19	0	0	0	0	1	1	1	1	0	4
BL20	0	0	0	0	0	0	0	0	0	0
BL21	0	0	0	0	1	1	1	1	0	4
BL22	1	1	1	1	1	1	1	1	0	8
BL23	1	1	1	1	0	0	0	0	0	4
BL24	0	0	0	0	0	0	1	1	0	2
BL25	0	0	0	0	1	1	1	1	0	4
BL26	1	1	1	1	1	1	0	0	0	6
BL27	1	1	1	1	0	0	0	0	0	4
BL28	1	1	1	1	1	1	1	1	0	8
BL29	1	1	1	1	0	0	0	0	0	4
BL30	0	0	0	0	0	0	0	0	0	0
BL31	0	0	0	0	1	1	1	1	0	4
# of 1s	16	16	16	16	16	16	16	16		

Note: 1. Simplified pattern; same data pattern was applied to DQ[4], DQ[5], DQ[6], and DQ[7] to reduce complexity for I_{DD4W} pattern programming.

Table 179: Data Pattern for I_{DD4R} (DBI Off) for BL = 16

DBI Off Case										
	DQ[7]	DQ[6]	DQ[5]	DQ[4]	DQ[3]	DQ[2]	DQ[1]	DQ[0]	DBI	# of 1s
BL0	1	1	1	1	1	1	1	1	0	8

Micron Technology, Inc. reserves the right to change products or specifications without notice.
© 2017 Micron Technology, Inc. All rights reserved.

Table 179: Data Pattern for I_{DD4R} (DBI Off) for BL = 16 (Continued)

DBI Off Case										
	DQ[7]	DQ[6]	DQ[5]	DQ[4]	DQ[3]	DQ[2]	DQ[1]	DQ[0]	DBI	# of 1s
BL1	1	1	1	1	0	0	0	0	0	4
BL2	0	0	0	0	0	0	0	0	0	0
BL3	0	0	0	0	1	1	1	1	0	4
BL4	0	0	0	0	0	0	1	1	0	2
BL5	0	0	0	0	1	1	1	1	0	4
BL6	1	1	1	1	1	1	0	0	0	6
BL7	1	1	1	1	0	0	0	0	0	4
BL8	1	1	1	1	1	1	1	1	0	8
BL9	1	1	1	1	0	0	0	0	0	4
BL10	0	0	0	0	0	0	0	0	0	0
BL11	0	0	0	0	1	1	1	1	0	4
BL12	0	0	0	0	0	0	1	1	0	2
BL13	0	0	0	0	1	1	1	1	0	4
BL14	1	1	1	1	1	1	0	0	0	6
BL15	1	1	1	1	0	0	0	0	0	4
BL16	1	1	1	1	1	1	1	1	0	8
BL17	1	1	1	1	0	0	0	0	0	4
BL18	0	0	0	0	0	0	0	0	0	0
BL19	0	0	0	0	1	1	1	1	0	4
BL20	1	1	1	1	1	1	0	0	0	6
BL21	1	1	1	1	0	0	0	0	0	4
BL22	0	0	0	0	0	0	1	1	0	2
BL23	0	0	0	0	1	1	1	1	0	4
BL24	0	0	0	0	0	0	0	0	0	0
BL25	0	0	0	0	1	1	1	1	0	4
BL26	1	1	1	1	1	1	1	1	0	8
BL27	1	1	1	1	0	0	0	0	0	4
BL28	0	0	0	0	0	0	1	1	0	2
BL29	0	0	0	0	1	1	1	1	0	4
BL30	1	1	1	1	1	1	0	0	0	6
BL31	1	1	1	1	0	0	0	0	0	4
# of 1s	16	16	16	16	16	16	16	16		

Note: 1. Simplified pattern; same data pattern was applied to DQ[4], DQ[5], DQ[6], and DQ[7] to reduce complexity for I_{DD4R} pattern programming.

Micron Technology, Inc. reserves the right to change products or specifications without notice.
© 2017 Micron Technology, Inc. All rights reserved.

Table 180: Data Pattern for I_{DD4W} (DBI On) for BL = 16

DBI On Case										
	DQ[7]	DQ[6]	DQ[5]	DQ[4]	DQ[3]	DQ[2]	DQ[1]	DQ[0]	DBI	# of 1s
BL0	0	0	0	0	0	0	0	0	1	1
BL1	1	1	1	1	0	0	0	0	0	4
BL2	0	0	0	0	0	0	0	0	0	0
BL3	0	0	0	0	1	1	1	1	0	4
BL4	0	0	0	0	0	0	1	1	0	2
BL5	0	0	0	0	1	1	1	1	0	4
BL6	0	0	0	0	0	0	1	1	1	3
BL7	1	1	1	1	0	0	0	0	0	4
BL8	0	0	0	0	0	0	0	0	1	1
BL9	1	1	1	1	0	0	0	0	0	4
BL10	0	0	0	0	0	0	0	0	0	0
BL11	0	0	0	0	1	1	1	1	0	4
BL12	0	0	0	0	0	0	1	1	0	2
BL13	0	0	0	0	1	1	1	1	0	4
BL14	0	0	0	0	0	0	1	1	1	3
BL15	1	1	1	1	0	0	0	0	0	4
BL16	0	0	0	0	0	0	1	1	1	3
BL17	1	1	1	1	0	0	0	0	0	4
BL18	0	0	0	0	0	0	1	1	0	2
BL19	0	0	0	0	1	1	1	1	0	4
BL20	0	0	0	0	0	0	0	0	0	0
BL21	0	0	0	0	1	1	1	1	0	4
BL22	0	0	0	0	0	0	0	0	1	1
BL23	1	1	1	1	0	0	0	0	0	4
BL24	0	0	0	0	0	0	1	1	0	2
BL25	0	0	0	0	1	1	1	1	0	4
BL26	0	0	0	0	0	0	1	1	1	3
BL27	1	1	1	1	0	0	0	0	0	4
BL28	0	0	0	0	0	0	0	0	1	1
BL29	1	1	1	1	0	0	0	0	0	4
BL30	0	0	0	0	0	0	0	0	0	0
BL31	0	0	0	0	1	1	1	1	0	4
# of 1s	8	8	8	8	8	8	16	16	8	

Note: 1. DBI enabled burst: BL0, BL6, BL8, BL14, BL16, BL22, BL26, and BL28.

Micron Technology, Inc. reserves the right to change products or specifications without notice.
© 2017 Micron Technology, Inc. All rights reserved.

Table 181: Data Pattern for I_{DD4R} (DBI On) for BL = 16

DBI On Case										
	DQ[7]	DQ[6]	DQ[5]	DQ[4]	DQ[3]	DQ[2]	DQ[1]	DQ[0]	DBI	# of 1s
BL0	0	0	0	0	0	0	0	0	1	1
BL1	1	1	1	1	0	0	0	0	0	4
BL2	0	0	0	0	0	0	0	0	0	0
BL3	0	0	0	0	1	1	1	1	0	4
BL4	0	0	0	0	0	0	1	1	0	2
BL5	0	0	0	0	1	1	1	1	0	4
BL6	0	0	0	0	0	0	1	1	1	3
BL7	1	1	1	1	0	0	0	0	0	4
BL8	0	0	0	0	0	0	0	0	1	1
BL9	1	1	1	1	0	0	0	0	0	4
BL10	0	0	0	0	0	0	0	0	0	0
BL11	0	0	0	0	1	1	1	1	0	4
BL12	0	0	0	0	0	0	1	1	0	2
BL13	0	0	0	0	1	1	1	1	0	4
BL14	0	0	0	0	0	0	1	1	1	3
BL15	1	1	1	1	0	0	0	0	0	4
BL16	0	0	0	0	0	0	0	0	1	1
BL17	1	1	1	1	0	0	0	0	0	4
BL18	0	0	0	0	0	0	0	0	0	0
BL19	0	0	0	0	1	1	1	1	0	4
BL20	0	0	0	0	0	0	1	1	1	3
BL21	1	1	1	1	0	0	0	0	0	4
BL22	0	0	0	0	0	0	1	1	0	2
BL23	0	0	0	0	1	1	1	1	0	4
BL24	0	0	0	0	0	0	0	0	0	0
BL25	0	0	0	0	1	1	1	1	0	4
BL26	0	0	0	0	0	0	0	0	1	1
BL27	1	1	1	1	0	0	0	0	0	4
BL28	0	0	0	0	0	0	1	1	0	2
BL29	0	0	0	0	1	1	1	1	0	4
BL30	0	0	0	0	0	0	1	1	1	3
BL31	1	1	1	1	0	0	0	0	0	4
# of 1s	8	8	8	8	8	8	16	16	8	

Note: 1. DBI enabled burst: BL0, BL6, BL8, BL14, BL20, BL26, and BL30.

Micron Technology, Inc. reserves the right to change products or specifications without notice.
© 2017 Micron Technology, Inc. All rights reserved.

Table 182: CA Pattern for I_{DD4R} for BL = 32

Clock Cycle Number	CKE	CS	Command	CA0	CA1	CA2	CA3	CA4	CA5
N	HIGH	HIGH	READ-1	L	H	L	L	L	L
N+1	HIGH	LOW		L	H	L	L	L	L
N+2	HIGH	HIGH	CAS-2	L	H	L	L	H	L
N+3	HIGH	LOW		L	L	L	L	L	L
N+4	HIGH	LOW	DES	L	L	L	L	L	L
N+5	HIGH	LOW	DES	L	L	L	L	L	L
N+6	HIGH	LOW	DES	L	L	L	L	L	L
N+7	HIGH	LOW	DES	L	L	L	L	L	L
N+8	HIGH	LOW	DES	L	L	L	L	L	L
N+9	HIGH	LOW	DES	L	L	L	L	L	L
N+10	HIGH	LOW	DES	L	L	L	L	L	L
N+11	HIGH	LOW	DES	L	L	L	L	L	L
N+12	HIGH	LOW	DES	L	L	L	L	L	L
N+13	HIGH	LOW	DES	L	L	L	L	L	L
N+14	HIGH	LOW	DES	L	L	L	L	L	L
N+15	HIGH	LOW	DES	L	L	L	L	L	L
N+16	HIGH	HIGH	READ-1	L	H	L	L	L	L
N+17	HIGH	LOW		L	H	L	L	H	L
N+18	HIGH	HIGH	CAS-2	L	H	L	L	H	H
N+19	HIGH	LOW		H	H	L	H	H	H
N+20	HIGH	LOW	DES	L	L	L	L	L	L
N+21	HIGH	LOW	DES	L	L	L	L	L	L
N+22	HIGH	LOW	DES	L	L	L	L	L	L
N+23	HIGH	LOW	DES	L	L	L	L	L	L
N+24	HIGH	LOW	DES	L	L	L	L	L	L
N+25	HIGH	LOW	DES	L	L	L	L	L	L
N+26	HIGH	LOW	DES	L	L	L	L	L	L
N+27	HIGH	LOW	DES	L	L	L	L	L	L
N+28	HIGH	LOW	DES	L	L	L	L	L	L
N+29	HIGH	LOW	DES	L	L	L	L	L	L
N+30	HIGH	LOW	DES	L	L	L	L	L	L
N+31	HIGH	LOW	DES	L	L	L	L	L	L

Note: 1. BA[2:0] = 010, C[9:5] = 00000 or 11111, Burst order C[4:2] = 000 or 111.

Micron Technology, Inc. reserves the right to change products or specifications without notice.
© 2017 Micron Technology, Inc. All rights reserved.

Table 183: CA Pattern for I_{DD4W} for BL = 32

Clock Cycle Number	CKE	CS	Command	CA0	CA1	CA2	CA3	CA4	CA5
N	HIGH	HIGH	WRITE-1	L	L	H	L	L	L
N+1	HIGH	LOW		L	H	L	L	L	L
N+2	HIGH	HIGH	CAS-2	L	H	L	L	H	L
N+3	HIGH	LOW		L	L	L	L	L	L
N+4	HIGH	LOW	DES	L	L	L	L	L	L
N+5	HIGH	LOW	DES	L	L	L	L	L	L
N+6	HIGH	LOW	DES	L	L	L	L	L	L
N+7	HIGH	LOW	DES	L	L	L	L	L	L
N+8	HIGH	LOW	DES	L	L	L	L	L	L
N+9	HIGH	LOW	DES	L	L	L	L	L	L
N+10	HIGH	LOW	DES	L	L	L	L	L	L
N+11	HIGH	LOW	DES	L	L	L	L	L	L
N+12	HIGH	LOW	DES	L	L	L	L	L	L
N+13	HIGH	LOW	DES	L	L	L	L	L	L
N+14	HIGH	LOW	DES	L	L	L	L	L	L
N+15	HIGH	LOW	DES	L	L	L	L	L	L
N+16	HIGH	HIGH	WRITE-1	L	L	H	L	L	L
N+17	HIGH	LOW		L	H	L	L	H	L
N+18	HIGH	HIGH	CAS-2	L	H	L	L	H	H
N+19	HIGH	LOW		L	L	L	H	H	H
N+20	HIGH	LOW	DES	L	L	L	L	L	L
N+21	HIGH	LOW	DES	L	L	L	L	L	L
N+22	HIGH	LOW	DES	L	L	L	L	L	L
N+23	HIGH	LOW	DES	L	L	L	L	L	L
N+24	HIGH	LOW	DES	L	L	L	L	L	L
N+25	HIGH	LOW	DES	L	L	L	L	L	L
N+26	HIGH	LOW	DES	L	L	L	L	L	L
N+27	HIGH	LOW	DES	L	L	L	L	L	L
N+28	HIGH	LOW	DES	L	L	L	L	L	L
N+29	HIGH	LOW	DES	L	L	L	L	L	L
N+30	HIGH	LOW	DES	L	L	L	L	L	L
N+31	HIGH	LOW	DES	L	L	L	L	L	L

Note: 1. BA[2:0] = 010, C[9:5] = 00000 or 11111.

Micron Technology, Inc. reserves the right to change products or specifications without notice.
© 2017 Micron Technology, Inc. All rights reserved.

Table 184: Data Pattern for I_{DD4W} (DBI Off) for BL = 32

DBI Off Case										
	DQ[7]	DQ[6]	DQ[5]	DQ[4]	DQ[3]	DQ[2]	DQ[1]	DQ[0]	DBI	# of 1s
BL0	1	1	1	1	1	1	1	1	0	8
BL1	1	1	1	1	0	0	0	0	0	4
BL2	0	0	0	0	0	0	0	0	0	0
BL3	0	0	0	0	1	1	1	1	0	4
BL4	0	0	0	0	0	0	1	1	0	2
BL5	0	0	0	0	1	1	1	1	0	4
BL6	1	1	1	1	1	1	0	0	0	6
BL7	1	1	1	1	0	0	0	0	0	4
BL8	1	1	1	1	1	1	1	1	0	8
BL9	1	1	1	1	0	0	0	0	0	4
BL10	0	0	0	0	0	0	0	0	0	0
BL11	0	0	0	0	1	1	1	1	0	4
BL12	0	0	0	0	0	0	1	1	0	2
BL13	0	0	0	0	1	1	1	1	0	4
BL14	1	1	1	1	1	1	0	0	0	6
BL15	1	1	1	1	0	0	0	0	0	4
BL16	1	1	1	1	1	1	0	0	0	6
BL17	1	1	1	1	0	0	0	0	0	4
BL18	0	0	0	0	0	0	1	1	0	2
BL19	0	0	0	0	1	1	1	1	0	4
BL20	0	0	0	0	0	0	0	0	0	0
BL21	0	0	0	0	1	1	1	1	0	4
BL22	1	1	1	1	1	1	1	1	0	8
BL23	1	1	1	1	0	0	0	0	0	4
BL24	0	0	0	0	0	0	1	1	0	2
BL25	0	0	0	0	1	1	1	1	0	4
BL26	1	1	1	1	1	1	0	0	0	6
BL27	1	1	1	1	0	0	0	0	0	4
BL28	1	1	1	1	1	1	1	1	0	8
BL29	1	1	1	1	0	0	0	0	0	4
BL30	0	0	0	0	0	0	0	0	0	0
BL31	0	0	0	0	1	1	1	1	0	4
BL32	1	1	1	1	1	1	1	1	0	8
BL33	1	1	1	1	0	0	0	0	0	4
BL34	0	0	0	0	0	0	0	0	0	0
BL35	0	0	0	0	1	1	1	1	0	4
BL36	0	0	0	0	0	0	1	1	0	2

Micron Technology, Inc. reserves the right to change products or specifications without notice.
© 2017 Micron Technology, Inc. All rights reserved.

Table 184: Data Pattern for I_{DD4W} (DBI Off) for BL = 32 (Continued)

DBI Off Case										
	DQ[7]	DQ[6]	DQ[5]	DQ[4]	DQ[3]	DQ[2]	DQ[1]	DQ[0]	DBI	# of 1s
BL37	0	0	0	0	1	1	1	1	0	4
BL38	1	1	1	1	1	1	0	0	0	6
BL39	1	1	1	1	0	0	0	0	0	4
BL40	1	1	1	1	1	1	1	1	0	8
BL41	1	1	1	1	0	0	0	0	0	4
BL42	0	0	0	0	0	0	0	0	0	0
BL43	0	0	0	0	1	1	1	1	0	4
BL44	0	0	0	0	0	0	1	1	0	2
BL45	0	0	0	0	1	1	1	1	0	4
BL46	1	1	1	1	1	1	0	0	0	6
BL47	1	1	1	1	0	0	0	0	0	4
BL48	1	1	1	1	1	1	0	0	0	6
BL49	1	1	1	1	0	0	0	0	0	4
BL50	0	0	0	0	0	0	1	1	0	2
BL51	0	0	0	0	1	1	1	1	0	4
BL52	0	0	0	0	0	0	0	0	0	0
BL53	0	0	0	0	1	1	1	1	0	4
BL54	1	1	1	1	1	1	1	1	0	8
BL55	1	1	1	1	0	0	0	0	0	4
BL56	0	0	0	0	0	0	1	1	0	2
BL57	0	0	0	0	1	1	1	1	0	4
BL58	1	1	1	1	1	1	0	0	0	6
BL59	1	1	1	1	0	0	0	0	0	4
BL60	1	1	1	1	1	1	1	1	0	8
BL61	1	1	1	1	0	0	0	0	0	4
BL62	0	0	0	0	0	0	0	0	0	0
BL63	0	0	0	0	1	1	1	1	0	4
# of 1s	32	32	32	32	32	32	32	32		

Note: 1. Simplified pattern; same data pattern was applied to DQ[4], DQ[5], DQ[6], and DQ[7] to reduce complexity for I_{DD4W} pattern programming.

Table 185: Data Pattern for I_{DD4R} (DBI Off) for BL = 32

DBI Off Case										
	DQ[7]	DQ[6]	DQ[5]	DQ[4]	DQ[3]	DQ[2]	DQ[1]	DQ[0]	DBI	# of 1s
BL0	1	1	1	1	1	1	1	1	0	8
BL1	1	1	1	1	0	0	0	0	0	4

Micron Technology, Inc. reserves the right to change products or specifications without notice.
© 2017 Micron Technology, Inc. All rights reserved.

Table 185: Data Pattern for I_{DD4R} (DBI Off) for BL = 32 (Continued)

DBI Off Case										
	DQ[7]	DQ[6]	DQ[5]	DQ[4]	DQ[3]	DQ[2]	DQ[1]	DQ[0]	DBI	# of 1s
BL2	0	0	0	0	0	0	0	0	0	0
BL3	0	0	0	0	1	1	1	1	0	4
BL4	0	0	0	0	0	0	1	1	0	2
BL5	0	0	0	0	1	1	1	1	0	4
BL6	1	1	1	1	1	1	0	0	0	6
BL7	1	1	1	1	0	0	0	0	0	4
BL8	1	1	1	1	1	1	1	1	0	8
BL9	1	1	1	1	0	0	0	0	0	4
BL10	0	0	0	0	0	0	0	0	0	0
BL11	0	0	0	0	1	1	1	1	0	4
BL12	0	0	0	0	0	0	1	1	0	2
BL13	0	0	0	0	1	1	1	1	0	4
BL14	1	1	1	1	1	1	0	0	0	6
BL15	1	1	1	1	0	0	0	0	0	4
BL16	1	1	1	1	1	1	0	0	0	6
BL17	1	1	1	1	0	0	0	0	0	4
BL18	0	0	0	0	0	0	1	1	0	2
BL19	0	0	0	0	1	1	1	1	0	4
BL20	0	0	0	0	0	0	0	0	0	0
BL21	0	0	0	0	1	1	1	1	0	4
BL22	1	1	1	1	1	1	1	1	0	8
BL23	1	1	1	1	0	0	0	0	0	4
BL24	0	0	0	0	0	0	1	1	0	2
BL25	0	0	0	0	1	1	1	1	0	4
BL26	1	1	1	1	1	1	0	0	0	6
BL27	1	1	1	1	0	0	0	0	0	4
BL28	1	1	1	1	1	1	1	1	0	8
BL29	1	1	1	1	0	0	0	0	0	4
BL30	0	0	0	0	0	0	0	0	0	0
BL31	0	0	0	0	1	1	1	1	0	4
BL32	0	0	0	0	0	0	1	1	0	2
BL33	0	0	0	0	1	1	1	1	0	4
BL34	1	1	1	1	1	1	0	0	0	6
BL35	1	1	1	1	0	0	0	0	0	4
BL36	1	1	1	1	1	1	1	1	0	8
BL37	1	1	1	1	0	0	0	0	0	4
BL38	0	0	0	0	0	0	0	0	0	0

Micron Technology, Inc. reserves the right to change products or specifications without notice.
© 2017 Micron Technology, Inc. All rights reserved.

Table 185: Data Pattern for I_{DD4R} (DBI Off) for BL = 32 (Continued)

DBI Off Case										
	DQ[7]	DQ[6]	DQ[5]	DQ[4]	DQ[3]	DQ[2]	DQ[1]	DQ[0]	DBI	# of 1s
BL39	0	0	0	0	1	1	1	1	0	4
BL40	0	0	0	0	0	0	1	1	0	2
BL41	0	0	0	0	1	1	1	1	0	4
BL42	1	1	1	1	1	1	0	0	0	6
BL43	1	1	1	1	0	0	0	0	0	4
BL44	1	1	1	1	1	1	1	1	0	8
BL45	1	1	1	1	0	0	0	0	0	4
BL46	0	0	0	0	0	0	0	0	0	0
BL47	0	0	0	0	1	1	1	1	0	4
BL48	1	1	1	1	1	1	1	1	0	8
BL49	1	1	1	1	0	0	0	0	0	4
BL50	0	0	0	0	0	0	0	0	0	0
BL51	0	0	0	0	1	1	1	1	0	4
BL52	1	1	1	1	1	1	0	0	0	6
BL53	1	1	1	1	0	0	0	0	0	4
BL54	0	0	0	0	0	0	1	1	0	2
BL55	0	0	0	0	1	1	1	1	0	4
BL56	0	0	0	0	0	0	0	0	0	0
BL57	0	0	0	0	1	1	1	1	0	4
BL58	1	1	1	1	1	1	1	1	0	8
BL59	1	1	1	1	0	0	0	0	0	4
BL60	0	0	0	0	0	0	1	1	0	2
BL61	0	0	0	0	1	1	1	1	0	4
BL62	1	1	1	1	1	1	0	0	0	6
BL63	1	1	1	1	0	0	0	0	0	4
# of 1s	32	32	32	32	32	32	32	32		

Note: 1. Simplified pattern; same data pattern was applied to DQ[4], DQ[5], DQ[6], and DQ[7] to reduce complexity for I_{DD4R} pattern programming.

Table 186: Data Pattern for I_{DD4W} (DBI On) for BL = 32

DBI On Case										
	DQ[7]	DQ[6]	DQ[5]	DQ[4]	DQ[3]	DQ[2]	DQ[1]	DQ[0]	DBI	# of 1s
BL0	0	0	0	0	0	0	0	0	1	1
BL1	1	1	1	1	0	0	0	0	0	4
BL2	0	0	0	0	0	0	0	0	0	0
BL3	0	0	0	0	1	1	1	1	0	4

Micron Technology, Inc. reserves the right to change products or specifications without notice.
© 2017 Micron Technology, Inc. All rights reserved.

Table 186: Data Pattern for I_{DD4W} (DBI On) for BL = 32 (Continued)

DBI On Case										
	DQ[7]	DQ[6]	DQ[5]	DQ[4]	DQ[3]	DQ[2]	DQ[1]	DQ[0]	DBI	# of 1s
BL4	0	0	0	0	0	0	1	1	0	2
BL5	0	0	0	0	1	1	1	1	0	4
BL6	0	0	0	0	0	0	1	1	1	3
BL7	1	1	1	1	0	0	0	0	0	4
BL8	0	0	0	0	0	0	0	0	1	1
BL9	1	1	1	1	0	0	0	0	0	4
BL10	0	0	0	0	0	0	0	0	0	0
BL11	0	0	0	0	1	1	1	1	0	4
BL12	0	0	0	0	0	0	1	1	0	2
BL13	0	0	0	0	1	1	1	1	0	4
BL14	0	0	0	0	0	0	1	1	1	3
BL15	1	1	1	1	0	0	0	0	0	4
BL16	0	0	0	0	0	0	1	1	1	3
BL17	1	1	1	1	0	0	0	0	0	4
BL18	0	0	0	0	0	0	1	1	0	2
BL19	0	0	0	0	1	1	1	1	0	4
BL20	0	0	0	0	0	0	0	0	0	0
BL21	0	0	0	0	1	1	1	1	0	4
BL22	0	0	0	0	0	0	0	0	1	1
BL23	1	1	1	1	0	0	0	0	0	4
BL24	0	0	0	0	0	0	1	1	0	2
BL25	0	0	0	0	1	1	1	1	0	4
BL26	0	0	0	0	0	0	1	1	1	3
BL27	1	1	1	1	0	0	0	0	0	4
BL28	0	0	0	0	0	0	0	0	1	1
BL29	1	1	1	1	0	0	0	0	0	4
BL30	0	0	0	0	0	0	0	0	0	0
BL31	0	0	0	0	1	1	1	1	0	4
BL32	0	0	0	0	0	0	0	0	1	1
BL33	1	1	1	1	0	0	0	0	0	4
BL34	0	0	0	0	0	0	0	0	0	0
BL35	0	0	0	0	1	1	1	1	0	4
BL36	0	0	0	0	0	0	1	1	0	2
BL37	0	0	0	0	1	1	1	1	0	4
BL38	0	0	0	0	0	0	1	1	1	3
BL39	1	1	1	1	0	0	0	0	0	4
BL40	0	0	0	0	0	0	0	0	1	1

Micron Technology, Inc. reserves the right to change products or specifications without notice.
© 2017 Micron Technology, Inc. All rights reserved.

Table 186: Data Pattern for I_{DD4W} (DBI On) for BL = 32 (Continued)

DBI On Case										
	DQ[7]	DQ[6]	DQ[5]	DQ[4]	DQ[3]	DQ[2]	DQ[1]	DQ[0]	DBI	# of 1s
BL41	1	1	1	1	0	0	0	0	0	4
BL42	0	0	0	0	0	0	0	0	0	0
BL43	0	0	0	0	1	1	1	1	0	4
BL44	0	0	0	0	0	0	1	1	0	2
BL45	0	0	0	0	1	1	1	1	0	4
BL46	0	0	0	0	0	0	1	1	1	3
BL47	1	1	1	1	0	0	0	0	0	4
BL48	0	0	0	0	0	0	1	1	1	3
BL49	1	1	1	1	0	0	0	0	0	4
BL50	0	0	0	0	0	0	1	1	0	2
BL51	0	0	0	0	1	1	1	1	0	4
BL52	0	0	0	0	0	0	0	0	0	0
BL53	0	0	0	0	1	1	1	1	0	4
BL54	0	0	0	0	0	0	0	0	1	1
BL55	1	1	1	1	0	0	0	0	0	4
BL56	0	0	0	0	0	0	1	1	0	2
BL57	0	0	0	0	1	1	1	1	0	4
BL58	0	0	0	0	0	0	1	1	1	3
BL59	1	1	1	1	0	0	0	0	0	4
BL60	0	0	0	0	0	0	0	0	1	1
BL61	1	1	1	1	0	0	0	0	0	4
BL62	0	0	0	0	0	0	0	0	0	0
BL63	0	0	0	0	1	1	1	1	0	4
# of 1s	16	16	16	16	16	16	32	32	16	

Note: 1. DBI enabled burst: BL0, BL6, BL8, BL14, BL16, BL22, BL26, BL28, BL32, BL38, BL40, BL46, BL48, BL54, BL58, and BL60.

Table 187: Data Pattern for I_{DD4R} (DBI On) for BL = 32

DBI On Case										
	DQ[7]	DQ[6]	DQ[5]	DQ[4]	DQ[3]	DQ[2]	DQ[1]	DQ[0]	DBI	# of 1s
BL0	0	0	0	0	0	0	0	0	1	1
BL1	1	1	1	1	0	0	0	0	0	4
BL2	0	0	0	0	0	0	0	0	0	0
BL3	0	0	0	0	1	1	1	1	0	4
BL4	0	0	0	0	0	0	1	1	0	2
BL5	0	0	0	0	1	1	1	1	0	4

Micron Technology, Inc. reserves the right to change products or specifications without notice.
© 2017 Micron Technology, Inc. All rights reserved.

Table 187: Data Pattern for I_{DD4R} (DBI On) for BL = 32 (Continued)

DBI On Case										
	DQ[7]	DQ[6]	DQ[5]	DQ[4]	DQ[3]	DQ[2]	DQ[1]	DQ[0]	DBI	# of 1s
BL6	0	0	0	0	0	0	1	1	1	3
BL7	1	1	1	1	0	0	0	0	0	4
BL8	0	0	0	0	0	0	0	0	1	1
BL9	1	1	1	1	0	0	0	0	0	4
BL10	0	0	0	0	0	0	0	0	0	0
BL11	0	0	0	0	1	1	1	1	0	4
BL12	0	0	0	0	0	0	1	1	0	2
BL13	0	0	0	0	1	1	1	1	0	4
BL14	0	0	0	0	0	0	1	1	1	3
BL15	1	1	1	1	0	0	0	0	0	4
BL16	0	0	0	0	0	0	1	1	1	3
BL17	1	1	1	1	0	0	0	0	0	4
BL18	0	0	0	0	0	0	1	1	0	2
BL19	0	0	0	0	1	1	1	1	0	4
BL20	0	0	0	0	0	0	0	0	0	0
BL21	0	0	0	0	1	1	1	1	0	4
BL22	0	0	0	0	0	0	0	0	1	1
BL23	1	1	1	1	0	0	0	0	0	4
BL24	0	0	0	0	0	0	1	1	0	2
BL25	0	0	0	0	1	1	1	1	0	4
BL26	0	0	0	0	0	0	1	1	1	3
BL27	1	1	1	1	0	0	0	0	0	4
BL28	0	0	0	0	0	0	0	0	1	1
BL29	1	1	1	1	0	0	0	0	0	4
BL30	0	0	0	0	0	0	0	0	0	0
BL31	0	0	0	0	1	1	1	1	0	4
BL32	0	0	0	0	0	0	1	1	0	2
BL33	0	0	0	0	1	1	1	1	0	4
BL34	0	0	0	0	0	0	1	1	1	3
BL35	1	1	1	1	0	0	0	0	0	4
BL36	0	0	0	0	0	0	0	0	1	1
BL37	1	1	1	1	0	0	0	0	0	4
BL38	0	0	0	0	0	0	0	0	0	0
BL39	0	0	0	0	1	1	1	1	0	4
BL40	0	0	0	0	0	0	1	1	0	2
BL41	0	0	0	0	1	1	1	1	0	4
BL42	0	0	0	0	0	0	1	1	1	3

Micron Technology, Inc. reserves the right to change products or specifications without notice.
© 2017 Micron Technology, Inc. All rights reserved.

Table 187: Data Pattern for I_{DD4R} (DBI On) for BL = 32 (Continued)

DBI On Case										
	DQ[7]	DQ[6]	DQ[5]	DQ[4]	DQ[3]	DQ[2]	DQ[1]	DQ[0]	DBI	# of 1s
BL43	1	1	1	1	0	0	0	0	0	4
BL44	0	0	0	0	0	0	0	0	1	1
BL45	1	1	1	1	0	0	0	0	0	4
BL46	0	0	0	0	0	0	0	0	0	0
BL47	0	0	0	0	1	1	1	1	0	4
BL48	0	0	0	0	0	0	0	0	1	1
BL49	1	1	1	1	0	0	0	0	0	4
BL50	0	0	0	0	0	0	0	0	0	0
BL51	0	0	0	0	1	1	1	1	0	4
BL52	0	0	0	0	0	0	1	1	1	3
BL53	1	1	1	1	0	0	0	0	0	4
BL54	0	0	0	0	0	0	1	1	0	2
BL55	0	0	0	0	1	1	1	1	0	4
BL56	0	0	0	0	0	0	0	0	0	0
BL57	0	0	0	0	1	1	1	1	0	4
BL58	0	0	0	0	0	0	0	0	1	1
BL59	1	1	1	1	0	0	0	0	0	4
BL60	0	0	0	0	0	0	1	1	0	2
BL61	0	0	0	0	1	1	1	1	0	4
BL62	0	0	0	0	0	0	1	1	1	3
BL63	1	1	1	1	0	0	0	0	0	4
# of 1s	16	16	16	16	16	16	32	32	16	

Note: 1. DBI enabled burst: BL0, BL6, BL8, BL14, BL16, BL22, BL26, BL28, BL34, BL36, BL42, BL44, BL48, BL52, BL58, and BL62.

Micron Technology, Inc. reserves the right to change products or specifications without notice.
© 2017 Micron Technology, Inc. All rights reserved.

I_{DD} Specifications

I_{DD} values are for the entire operating voltage range, and all of them are for the entire standard temperature range.

Table 188: I_{DD} Specification Parameters and Operating Conditions

LPDDR4: V_{DD2}, V_{DDQ} = 1.06–1.17V; V_{DD1} = 1.70–1.95V

LPDDR4X: V_{DD2}= 1.06–1.17V; V_{DDQ} = 0.57–0.65V; V_{DD1} = 1.70–1.95V

Parameter/Condition	Symbol	Power Supply	Notes
Operating one bank active-precharge current: $^{t}CK = {}^{t}CK$ (MIN); $^{t}RC = {}^{t}RC$ (MIN); CKE is HIGH; CS is LOW between valid commands; CA bus inputs are switching; Data bus inputs are stable; ODT is disabled	I_{DD01}	V_{DD1}	
	I_{DD02}	V_{DD2}	
	I_{DD0Q}	V_{DDQ}	2
Idle power-down standby current: $^{t}CK = {}^{t}CK$ (MIN); CKE is LOW; CS is LOW; All banks are idle; CA bus inputs are switching; Data bus inputs are stable; ODT is disabled	I_{DD2P1}	V_{DD1}	
	I_{DD2P2}	V_{DD2}	
	I_{DD2PQ}	V_{DDQ}	2
Idle power-down standby current with clock stop: CK_t = LOW, CK_c = HIGH; CKE is LOW; CS is LOW; All banks are idle; CA bus inputs are stable; Data bus inputs are stable; ODT is disabled	I_{DD2PS1}	V_{DD1}	
	I_{DD2PS2}	V_{DD2}	
	I_{DD2PSQ}	V_{DDQ}	2
Idle non-power-down standby current: $^{t}CK = {}^{t}CK$ (MIN); CKE is HIGH; CS is LOW; All banks are idle; CA bus inputs are switching; Data bus inputs are stable; ODT is disabled	I_{DD2N1}	V_{DD1}	
	I_{DD2N2}	V_{DD2}	
	I_{DD2NQ}	V_{DDQ}	2
Idle non-power-down standby current with clock stopped: CK_t = LOW; CK_c = HIGH; CKE is HIGH; CS is LOW; All banks are idle; CA bus inputs are stable; Data bus inputs are stable; ODT is disabled	I_{DD2NS1}	V_{DD1}	
	I_{DD2NS2}	V_{DD2}	
	I_{DD2NSQ}	V_{DDQ}	2
Active power-down standby current: $^{t}CK = {}^{t}CK$ (MIN); CKE is LOW; CS is LOW; One bank is active; CA bus inputs are switching; Data bus inputs are stable; ODT is disabled	I_{DD3P1}	V_{DD1}	
	I_{DD3P2}	V_{DD2}	
	I_{DD3PQ}	V_{DDQ}	2
Active power-down standby current with clock stop: CK_t = LOW, CK_c = HIGH; CKE is LOW; CS is LOW; One bank is active; CA bus inputs are stable; Data bus inputs are stable; ODT is disabled	I_{DD3PS1}	V_{DD1}	
	I_{DD3PS2}	V_{DD2}	
	I_{DD3PSQ}	V_{DDQ}	3
Active non-power-down standby current: $^{t}CK = {}^{t}CK$ (MIN); CKE is HIGH; CS is LOW; One bank is active; CA bus inputs are switching; Data bus inputs are stable; ODT is disabled	I_{DD3N1}	V_{DD1}	
	I_{DD3N2}	V_{DD2}	
	I_{DD3NQ}	V_{DDQ}	3
Active non-power-down standby current with clock stopped: CK_t = LOW, CK_c = HIGH; CKE is HIGH; CS is LOW; One bank is active; CA bus inputs are stable; Data bus inputs are stable; ODT is disabled	I_{DD3NS1}	V_{DD1}	
	I_{DD3NS2}	V_{DD2}	
	I_{DD3NSQ}	V_{DDQ}	3
Operating burst READ current: $^{t}CK = {}^{t}CK$ (MIN); CS is LOW between valid commands; One bank is active; BL = 16 or 32; RL = RL (MIN); CA bus inputs are switching; 50% data change each burst transfer; ODT is disabled	I_{DD4R1}	V_{DD1}	
	I_{DD4R2}	V_{DD2}	
	I_{DD4RQ}	V_{DDQ}	4

Micron Technology, Inc. reserves the right to change products or specifications without notice.
© 2017 Micron Technology, Inc. All rights reserved.

Table 188: I_{DD} Specification Parameters and Operating Conditions (Continued)

LPDDR4: V_{DD2}, V_{DDQ} = 1.06–1.17V; V_{DD1} = 1.70–1.95V

LPDDR4X: V_{DD2}= 1.06–1.17V; V_{DDQ} = 0.57–0.65V; V_{DD1} = 1.70–1.95V

Parameter/Condition	Symbol	Power Supply	Notes
Operating burst WRITE current: ^{t}CK = ^{t}CK (MIN); CS is LOW between valid commands; One bank is active; BL = 16 or 32; WL = WL (MIN); CA bus inputs are switching; 50% data change each burst transfer; ODT is disabled	I_{DD4W1}	V_{DD1}	
	I_{DD4W2}	V_{DD2}	
	I_{DD4WQ}	V_{DDQ}	3
All-bank REFRESH burst current: ^{t}CK = ^{t}CK (MIN); CKE is HIGH between valid commands; ^{t}RC = ^{t}RFCab (MIN); Burst refresh; CA bus inputs are switching; Data bus inputs are stable; ODT is disabled	I_{DD51}	V_{DD1}	
	I_{DD52}	V_{DD2}	
	I_{DD5Q}	V_{DDQ}	3
All-bank REFRESH average current: ^{t}CK = ^{t}CK (MIN); CKE is HIGH between valid commands; ^{t}RC = ^{t}REFI; CA bus inputs are switching; Data bus inputs are stable; ODT is disabled	I_{DD5AB1}	V_{DD1}	
	I_{DD5AB2}	V_{DD2}	
	I_{DD5ABQ}	V_{DDQ}	3
Per-bank REFRESH average current: ^{t}CK = ^{t}CK (MIN); CKE is HIGH between valid commands; ^{t}RC = ^{t}REFI/8; CA bus inputs are switching; Data bus inputs are stable; ODT is disabled	I_{DD5PB1}	V_{DD1}	
	I_{DD5PB2}	V_{DD2}	
	I_{DD5PBQ}	V_{DDQ}	3
Power-down self refresh current: CK_t = LOW, CK_c = HIGH; CKE is LOW; CA bus inputs are stable; Data bus inputs are stable; Maximum 1x self refresh rate; ODT is disabled	I_{DD61}	V_{DD1}	5, 6
	I_{DD62}	V_{DD2}	5, 6
	I_{DD6Q}	V_{DDQ}	3, 5, 6

Notes:
1. ODT disabled: MR11[2:0] = 000b.
2. I_{DD} current specifications are tested after the device is properly initialized.
3. Measured currents are the summation of V_{DDQ} and V_{DD2}.
4. Guaranteed by design with output load = 5pF and R_{ON} = 40 ohm.
5. The 1x self refresh rate is the rate at which the device is refreshed internally during self refresh before going into the elevated temperature range.
6. This is the general definition that applies to full-array self refresh.
7. For all I_{DD} measurements, $V_{IHCKE} = 0.8 \times V_{DD2}$; $V_{ILCKE} = 0.2 \times V_{DD2}$.

Micron Technology, Inc. reserves the right to change products or specifications without notice.
© 2017 Micron Technology, Inc. All rights reserved.

AC Timing

Table 189: Clock Timing

Parameter	Symbol	Min/ Max	Data Rate 1600	3200	3733	4267	Unit
Average clock period	^{t}CK(AVG)	Min	1250	625	535	468	ps
		Max	100	100	100	100	ns
Average HIGH pulse width	^{t}CH(AVG)	Min	0.46				^{t}CK(AVG)
		Max	0.54				
Average LOW pulse width	^{t}CL(AVG)	Min	0.46				^{t}CK(AVG)
		Max	0.54				
Absolute clock period	^{t}CK(ABS)	Min	^{t}CK(AVG)min + ^{t}JIT(per)min				ps
Absolute clock HIGH pulse width	^{t}CH(ABS)	Min	0.43				^{t}CK(AVG)
		Max	0.57				
Absolute clock LOW pulse width	^{t}CL(ABS)	Min	0.43				^{t}CK(AVG)
		Max	0.57				
Clock period jitter	^{t}JIT(per)allowed	Min	–70	–40	–34	–30	ps
		Max	70	40	34	30	
Maximum clock jitter between two consecutive clock cycles (includes clock period jitter)	^{t}JIT(cc)allowed	Max	140	80	68	60	ps

Table 190: Read Output Timing

Parameter	Symbol	Min/ Max	Data Rate 533	1066	1600	2133	2667	3200	3733	4267	Unit	Notes
DQS output access time from CK_t/CK_c	^{t}DQSCK	Min	1500								ps	1
		Max	3500									
DQS output access time from CK_t/CK_c - voltage variation	^{t}DQSCK_VOLT	Max	7								ps/mV	2
DQS output access time from CK_t/CK_c - temperature variation	^{t}DQSCK_TEMP	Max	4								ps/°C	3
CK to DQS rank to rank variation	^{t}DQSCK_rank2rank	Max	1.0								ns	4, 5
DQS_t, DQS_c to DQ skew total, per group, per access (DBI Disabled)	^{t}DQSQ	Max	0.18								UI	6
DQ output hold time total from DQS_t, DQS_c (DBI Disabled)	^{t}QH	Min	MIN(^{t}QSH, ^{t}QSL)								ps	6

Micron Technology, Inc. reserves the right to change products or specifications without notice.
© 2017 Micron Technology, Inc. All rights reserved.

Table 190: Read Output Timing (Continued)

Parameter	Symbol	Min/ Max	Data Rate								Unit	Notes
			533	1066	1600	2133	2667	3200	3733	4267		
Data output valid window time total, per pin (DBI-Disabled)	^{t}QW_total	Min	0.75			0.73		0.70			UI	6, 11
DQS_t, DQS_c to DQ skew total, per group, per access (DBI-Enabled)	^{t}DQSQ_DBI	Max	0.18								UI	6
DQ output hold time total from DQS_t, DQS_c (DBI-Enabled)	^{t}QH_DBI	Min	MIN(^{t}QSH_DBI, ^{t}QSL_DBI)								ps	6
Data output valid window time total, per pin (DBI-Enabled)	^{t}QW_total_DBI	Min	0.75			0.73		0.70			UI	6, 11
DQS_t, DQS_c differential output LOW time (DBI-Disabled)	^{t}QSL	Min	^{t}CL(ABS) - 0.05								^{t}CK(AVG)	9, 11
DQS_t, DQS_c differential output HIGH time (DBI-Disabled)	^{t}QSH	Min	^{t}CH(ABS) - 0.05								^{t}CK(AVG)	10, 11
DQS_t, DQS_c differential output LOW time (DBI-Enabled)	^{t}QSL-DBI	Min	^{t}CL(ABS) - 0.045								^{t}CK(AVG)	9, 11
DQS_t, DQS_c differential output HIGH time (DBI-Enabled)	^{t}QSH-DBI	Min	^{t}CH(ABS) - 0.045								^{t}CK(AVG)	10, 11
Read preamble	^{t}RPRE	Min	1.8								^{t}CK(AVG)	
Read postamble	^{t}RPST	Min	0.4 (or 1.4 if extra postamble is programmed in MR)								^{t}CK(AVG)	
DQS Low-Z from clock	^{t}LZ(DQS)	Min	(RL × ^{t}CK) + ^{t}DQSCK(MIN) - (^{t}RPRE(MAX) × ^{t}CK) - 200ps								ps	
DQ Low-Z from clock	^{t}LZ(DQ)	Min	(RL × ^{t}CK) + ^{t}DQSCK(MIN) - 200ps								ps	
DQS High-Z from clock	^{t}HZ(DQS)	Max	(RL × ^{t}CK) + ^{t}DQSCK(MAX)+(BL/2 × ^{t}CK) + (^{t}RPST(MAX) × ^{t}CK) - 100ps								ps	
DQ High-Z from clock	^{t}HZ(DQ)	Max	(RL × ^{t}CK) + ^{t}DQSCK(MAX) + ^{t}DQSQ(MAX) + (BL/2 × ^{t}CK) - 100ps								ps	

Notes:
1. This parameter includes DRAM process, voltage, and temperature variation. It also includes the AC noise impact for frequencies >20 MHz and a max voltage of 45mV peak-to-peak from DC-20 MHz at a fixed temperature on the package. The voltage supply noise must comply with the component MIN/MAX DC operating conditions.
2. ^{t}DQSCK_volt max delay variation as a function of DC voltage variation for V_{DDQ} and V_{DD2}. The voltage supply noise must comply with the component MIN/MAX DC operating conditions. The voltage variation is defined as the MAX[ABS(^{t}DQSCK(MIN)@V1 - ^{t}DQSCK(MAX)@V2), ABS(^{t}DQSCK(MAX)@V1 - ^{t}DQSCK(MIN)@V2)]/ABS(V1 - V2).
3. ^{t}DQSCK_temp MAX delay variation as a function of temperature.
4. The same voltage and temperature are applied to ^{t}DQSCK_rank2rank.

Micron Technology, Inc. reserves the right to change products or specifications without notice.
© 2017 Micron Technology, Inc. All rights reserved.

5. ^{t}DQSCK_rank2rank parameter is applied to multi-ranks per byte lane within a package consisting of the same design die.
6. DQ-to-DQS differential jitter where the total includes the sum of deterministic and random timing terms for a specified BER.
7. The deterministic component of the total timing.
8. This parameter will be characterized and guaranteed by design.
9. ^{t}QSL describes the instantaneous differential output low pulse width on DQS_t - DQS_c, as measured from one falling edge to the next consecutive rising edge.
10. ^{t}QSH describes the instantaneous differential output high pulse width on DQS_t - DQS_c, as measured from one falling edge to the next consecutive rising edge.
11. This parameter is a function of input clock jitter. These values assume MIN ^{t}CH(ABS) and ^{t}CL(ABS). When the input clock jitter MIN ^{t}CH(ABS) and ^{t}CL(ABS) is 0.44 or greater than ^{t}CK(AVG), the minimum value of ^{t}QSL will be ^{t}CL(ABS) - 0.04 and ^{t}QSH will be ^{t}CH(ABS) - 0.04.

Table 191: Write Timing

Note UI = ^{t}CK(AVG)(MIN)/2

Parameter	Symbol	Min/ Max	Data Rate								Unit	Notes
			533	1066	1600	2133	2667	3200	3733	4267		
Rx timing window total at V_{dIVW} voltage levels	TdIVW_total	Max	0.22					0.25			UI	1, 2, 3
DQ and DMI input pulse width (at V_{CENT_DQ})	TdIPW	Min	0.45								UI	7
DQ-to-DQS offset	^{t}DQS2DQ	Min	200								ps	6
		Max	800									
DQ-to-DQ offset	^{t}DQDQ	Max	30								ps	7
DQ-to-DQS offset temperature variation	^{t}DQS2DQ_temp	Max	0.6								ps/°C	8
DQ-to-DQS offset voltage variation	^{t}DQS2DQ_volt	Max	33								ps/50mV	9
DQ-to-DQS offset rank to rank variation	^{t}DQS2DQ_rank2rank	Max	200								ps	10, 11
WRITE command to first DQS transition	^{t}DQSS	Min	0.75								^{t}CK(AVG)	
		Max	1.25									
DQS input HIGH-level width	^{t}DQSH	Min	0.4								^{t}CK(AVG)	
DQS input LOW-level width	^{t}DQSL	Min	0.4								^{t}CK(AVG)	
DQS falling edge to CK setup time	^{t}DSS	Min	0.2								^{t}CK(AVG)	
DQS falling edge from CK hold time	^{t}DSH	Min	0.2								^{t}CK(AVG)	
Write postamble	^{t}WPST	Min	0.4 (or 1.4 if extra postamble is programmed in MR)								^{t}CK(AVG)	

Micron Technology, Inc. reserves the right to change products or specifications without notice.
© 2017 Micron Technology, Inc. All rights reserved.

Table 191: Write Timing (Continued)

Note UI = ^{t}CK(AVG)(MIN)/2

Parameter	Symbol	Min/ Max	Data Rate								Unit	Notes
			533	1066	1600	2133	2667	3200	3733	4267		
Write preamble	^{t}WPRE	Min	1.8								^{t}CK(AVG)	

Notes:
1. Data Rx mask voltage and timing parameters are applied per pin and include the DRAM DQ-to-DQS voltage AC noise impact for frequencies >20 MHz with a maximum voltage of 45mV peak-to-peak at a fixed temperature on the package. The voltage supply noise must comply to the component MIN/MAX DC operating conditions.
2. Rx differential DQ-to-DQS jitter total timing window at the V_{dIVW} voltage levels.
3. Defined over the DQ internal V_{REF} range. The Rx mask at the pin must be within the internal $V_{REF(DQ)}$ range irrespective of the input signal common mode.
4. Rx mask defined for one pin toggling with other DQ signals in a steady state.
5. DQ-only minimum input pulse width defined at the $V_{CENT_DQ(pin_mid)}$.
6. DQ-to-DQS offset is within byte from DRAM pin to DRAM internal latch. Includes all DRAM process, voltage, and temperature variations.
7. DQ-to-DQ offset defined within byte from DRAM pin to DRAM internal latch for a given component.
8. ^{t}DQS2DQ(MAX) delay variation as a function of temperature.
9. ^{t}DQS2DQ(MAX) delay variation as a function of the DC voltage variation for V_{DDQ} and V_{DD2}. It includes the V_{DDQ} and V_{DD2} AC noise impact for frequencies >20 MHz and MAX voltage of 45mV peak-to-peak from DC-20 MHz at a fixed temperature on the package.
10. The same voltage and temperature are applied to ^{t}DQS2DQ_rank2rank.
11. ^{t}DQS2DQ_rank2rank parameter is applied to multi-ranks per byte lane within a package consisting of the same design die.

Table 192: CKE Input Timing

Parameter	Symbol	Min/ Max	Data Rate				Unit	Notes
			1600	3200	3733	4267		
CKE minimum pulse width (HIGH and LOW pulse width)	^{t}CKE	Min	MAX(7.5ns, 4*n*CK)				ns	1
Delay from valid command to CKE input LOW	^{t}CMDCKE	Min	MAX(1.75ns, 3*n*CK)				ns	1
Valid clock requirement after CKE input LOW	^{t}CKELCK	Min	MAX(5ns, 5*n*CK)				ns	1
Valid CS requirement before CKE input LOW	^{t}CSCKE	Min	1.75				ns	
Valid CS requirement after CKE input LOW	^{t}CKELCS	Min	MAX(5ns, 5*n*CK)				ns	1
Valid Clock requirement before CKE Input HIGH	^{t}CKCKEH	Min	MAX(1.75ns, 3*n*CK)				ns	1
Exit power-down to next valid command delay	^{t}XP	Min	MAX(7.5ns, 5*n*CK)				ns	1
Valid CS requirement before CKE input HIGH	^{t}CSCKEH	Min	1.75				ns	

Micron Technology, Inc. reserves the right to change products or specifications without notice.
© 2017 Micron Technology, Inc. All rights reserved.

Table 192: CKE Input Timing (Continued)

Parameter	Symbol	Min/ Max	Data Rate				Unit	Notes
			1600	3200	3733	4267		
Valid CS requirement after CKE input HIGH	^{t}CKEHCS	Min	MAX(7.5ns, 5*n*CK)				ns	1
Valid clock and CS requirement after CKE input LOW after MRW command	^{t}MRWCKEL	Min	MAX(14ns, 10*n*CK)				ns	1
Valid clock and CS requirement after CKE input LOW after ZQCAL START command	^{t}ZQCKE	Min	MAX(1.75ns, 3*n*CK)				ns	1

Note: 1. Delay time has to satisfy both analog time(ns) and clock count (*n*CK). For example, ^{t}CMDCKE will not expire until CK has toggled through at least 3 full cycles (3^{t}CK) and 3.75ns has transpired. The case that 3*n*CK is applied to is shown below.

Figure 164: ^{t}CMDCKE Timing

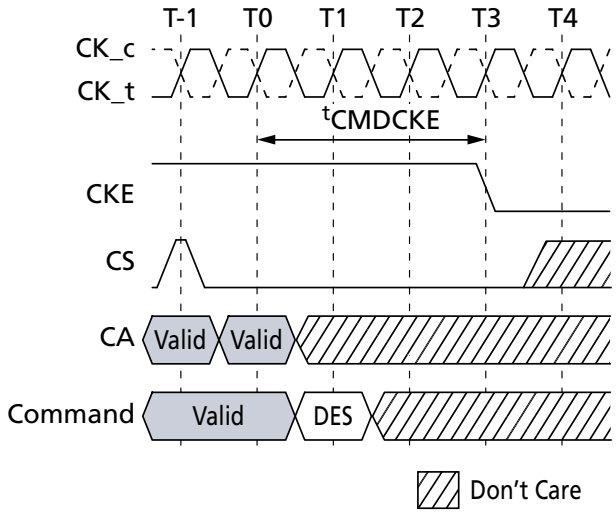

Table 193: Command Address Input Timing

Parameter	Symbol	Min/ Max	Data Rate								Unit	Notes
			533	1066	1600	2133	2667	3200	3733	4267		
Command/address valid window (referenced from CA V_{IL}/V_{IH} to CK V_{IX})	^{t}cIVW	Min	0.3								^{t}CK(AVG)	1, 2, 3
Address and control input pulse width (referenced to V_{REF})	^{t}cIPW	Min	0.55	0.55	0.55	0.6	0.6	0.6	0.6	0.6	^{t}CK(AVG)	4

Notes: 1. CA Rx mask timing parameters at the pin including voltage and temperature drift.
2. Rx differential CA to CK jitter total timing window at the VcIVW voltage levels.

Micron Technology, Inc. reserves the right to change products or specifications without notice.
© 2017 Micron Technology, Inc. All rights reserved.

3. Defined over the CA internal V_{REF} range. The Rx mask at the pin must be within the internal $V_{REF(CA)}$ range irrespective of the input signal common mode.
4. CA only minimum input pulse width defined at the V_{CENT_CA}(pin mid).

Table 194: Boot Timing Parameters (10–55 MHz)

Parameter	Symbol	Min/ Max	Value	Unit
Clock cycle time	^{t}CKb	Min	18	ns
		Max	100	
DQS output data acess time from CK	^{t}DQSCKb	Min	1.0	ns
		Max	10.0	
DQS edge to output data edge	^{t}DQSQb	Max	1.2	ns

Table 195: Mode Register Timing Parameters

Parameter	Symbol	Min/ Max	Data Rate				Unit
			1600	3200	3733	4267	
MODE REGISTER WRITE (MRW) command period	^{t}MRW	Min	MAX(10ns, 10*n*CK)				ns
MODE REGISTER SET command delay	^{t}MRD	Min	MAX(14ns, 10*n*CK)				ns
MODE REGISTER READ (MRR) command period	^{t}MRR	Min	8				^{t}CK(AVG)
Additional time after ^{t}XP has expired until the MRR command may be issued	^{t}MRRI	Min	^{t}RCD(MIN) + 3*n*CK				ns
Delay from MRW command to DQS driven out	^{t}SDO	Max	MAX(12*n*CK, 20ns)				ns

Table 196: Core Timing Parameters

Refresh rate is determined by the value in MR4 OP[2:0]

Parameter	Symbol	Min/ Max	Data Rate								Unit	Notes
			533	1066	1600	2133	2667	3200	3733	4267		
READ latency (DBI disabled)	RL-A	Min	6	10	14	20	24	28	32	36	^{t}CK(AVG)	
READ latency (DBI enabled)	RL-B	Min	6	12	16	22	28	32	36	40	^{t}CK(AVG)	
WRITE latency (Set A)	WL-A	Min	4	6	8	10	12	14	16	18	^{t}CK(AVG)	
WRITE latency (Set B)	WL-B	Min	4	8	12	18	22	26	30	34	^{t}CK(AVG)	

Micron Technology, Inc. reserves the right to change products or specifications without notice.
© 2017 Micron Technology, Inc. All rights reserved.

Table 196: Core Timing Parameters (Continued)

Refresh rate is determined by the value in MR4 OP[2:0]

Parameter	Symbol	Min/ Max	Data Rate								Unit	Notes
			533	1066	1600	2133	2667	3200	3733	4267		
ACTIVATE-to-ACTIVATE command period (same bank)	^{t}RC	Min	^{t}RAS + ^{t}RPab (with all-bank precharge) ^{t}RAS + ^{t}RPpb (with per-bank precharge)								ns	
Minimum self refresh time (entry to exit)	^{t}SR	Min	MAX(15ns, 3*n*CK)								ns	
Self refresh exit to next valid command delay	^{t}XSR	Min	MAX(^{t}RFCab + 7.5ns, 2*n*CK)								ns	
CAS-to-CAS delay	^{t}CCD	Min	8								^{t}CK(AVG)	
CAS-to-CAS delay masked write	^{t}CCDMW	Min	32								^{t}CK(AVG)	
Internal READ-to-PRE-CHARGE command delay	^{t}RTP	Min	MAX(7.5ns, 8*n*CK)								ns	
RAS-to-CAS delay	^{t}RCD	Min	MAX(18ns, 4*n*CK)								ns	
Row precharge time (single bank)	^{t}RPpb	Min	MAX(18ns, 3*n*CK)								ns	
Row precharge time (all banks)	^{t}RPab	Min	MAX(21ns, 3*n*CK)								ns	
Row active time	^{t}RAS	Min	MAX(42ns, 3*n*CK)								ns	
		Max	MIN(9 × ^{t}REFI × Refresh Rate, 70.2)								µs	
Write recovery time	^{t}WR	Min	MAX(18ns, 4*n*CK)								ns	
Write-to-read delay	^{t}WTR	Min	MAX(10ns, 8*n*CK)								ns	
Active bank A to active bank B	^{t}RRD	Min	MAX(10ns, 4*n*CK)							MAX(7.5ns, 4*n*CK)	ns	1
Precharge-to-precharge delay	^{t}PPD	Min	4								^{t}CK(AVG)	2
Four-bank activate window	^{t}FAW	Min	40							30	ns	1
Delay from SRE command to CKE input LOW	^{t}ESCKE	Min	MAX(1.75ns, 3*n*CK)								–	3

Notes:
1. 4267 Mb/s timing value is supported at lower data rates if the device is supporting 4266 Mb/s speed grade.
2. Precharge to precharge timing restriction does not apply to AUTO PRECHARGE commands.
3. Delay time has to satisfy both analog time (ns) and clock count (*n*CK). It means that ^{t}ESCKE will not expire until CK has toggled through at least three full cycles (3 ^{t}CK) and 1.75ns has transpired. The case which 3*n*CK is applied to is shown below.

Micron Technology, Inc. reserves the right to change products or specifications without notice.
© 2017 Micron Technology, Inc. All rights reserved.

Figure 165: ^{t}ESCKE Timing

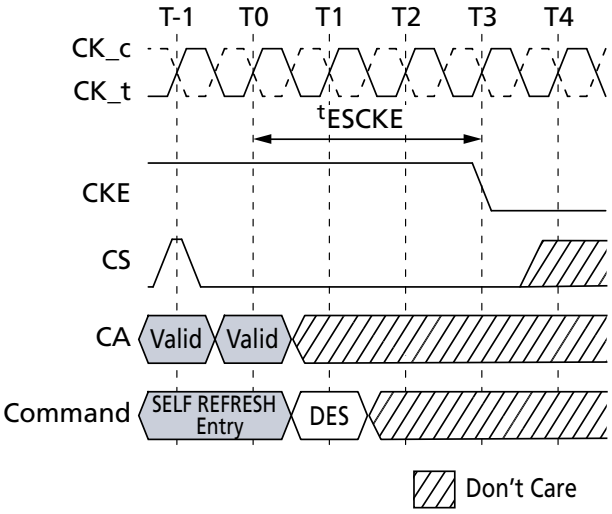

Table 197: CA Bus ODT Timing

Parameter	Symbol	Min/ Max	Data Rate 533-4267
CA ODT value update time	^{t}ODTUP	Min	RU(20ns/^{t}CK(AVG))

Table 198: CA Bus Training Parameters

Parameter	Symbol	Min/ Max	Data Rate 1600	3200	3733	4267	Unit	Notes
Valid clock requirement after CKE input LOW	^{t}CKELCK	Min	MAX(5ns, 5*n*CK)				^{t}CK	
Data setup for V_{REF} training mode	^{t}DStrain	Min	2				ns	
Data hold for V_{REF} training mode	^{t}DHtrain	Min	2				ns	
Asynchronous data read	^{t}ADR	Max	20				ns	
CA BUS TRAINING command-to-command delay	^{t}CACD	Min	RU(^{t}ADR/^{t}CK)				^{t}CK	1
Valid strobe requirement before CKE LOW	^{t}DQSCKE	Min	10				ns	
First CA BUS TRAINING command following CKE LOW	^{t}CAENT	Min	250				ns	
V_{REF} step time – multiple steps	^{t}VREFca_LONG	Max	250				ns	
V_{REF} step time – one step	^{t}VREFca_SHORT	Max	80				ns	
Valid clock requirement before CS HIGH	^{t}CKPRECS	Min	2^{t}CK + ^{t}XP				–	
Valid clock requirement after CS HIGH	^{t}CKPSTCS	Min	MAX(7.5ns, 5*n*CK)				–	

Micron Technology, Inc. reserves the right to change products or specifications without notice.
© 2017 Micron Technology, Inc. All rights reserved.

Table 198: CA Bus Training Parameters (Continued)

Parameter	Symbol	Min/ Max	Data Rate				Unit	Notes
			1600	3200	3733	4267		
Minimum delay from CS to DQS toggle in command bus training	^{t}CS_VREF	Min	2				^{t}CK	
Minimum delay from CKE HIGH to strobe High-Z	^{t}CKEHDQS	Min	10				ns	
CA bus training CKE HIGH to DQ tri-state	^{t}MRZ	Min	1.5				ns	
ODT turn-on latency from CKE	^{t}CKELODTon	Min	20				ns	
ODT turn-off latency from CKE	^{t}CKEHODToff	Min	20				ns	
Exit command bus training mode to next valid command delay	^{t}XCBT_Short	Min	MAX(200ns, 5*n*CK)				–	2
	^{t}XCBT_Middle	Min	MAX(200ns, 5*n*CK)				–	2
	^{t}XCBT_Long	Min	MAX(250ns, 5*n*CK)				–	2

Notes:
1. If ^{t}CACD is violated, the data for samples which violate ^{t}CACD will not be available, except for the last sample (where ^{t}CACD after this sample is met). Valid data for the last sample will be available after ^{t}ADR.
2. Exit command bus training mode to next valid command delay time depends on value of $V_{REF(CA)}$ setting: MR12 OP[5:0] and $V_{REF(CA)}$ range: MR12 OP[6] of FSP-OP 0 and 1. The details are shown in ^{t}FC value mapping table. Additionally exit command bus training mode to next valid command delay time may affect $V_{REF(DQ)}$ setting. Settling time of $V_{REF(DQ)}$ level is same as $V_{REF(CA)}$ level.

Table 199: Asynchronous ODT Turn On and Turn Off Timing

Symbol	800–2133 MHz	Unit
^{t}ODTon(MIN)	1.5	ns
^{t}ODTon(MAX)	3.5	ns
^{t}ODToff(MIN)	1.5	ns
^{t}ODToff(MAX)	3.5	ns

Table 200: Temperature Derating Parameters

Parameter	Symbol	Min/ Max	Data Rate				Unit
			1600	3200	3733	4267	
DQS output access time from CK_t/CK_c (derated)	^{t}DQSCKd	Max	3600				ps
RAS-to-CAS delay (derated)	^{t}RCDd	Min	^{t}RCD + 1.875				ns
ACTIVATE-to-ACTIVATE command period (same bank, derated)	^{t}RCd	Min	^{t}RC + 3.75				ns
Row active time (derated)	^{t}RASd	Min	^{t}RAS + 1.875				ns
Row precharge time (derated)	^{t}RPd	Min	^{t}RP + 1.875				ns

Micron Technology, Inc. reserves the right to change products or specifications without notice.
© 2017 Micron Technology, Inc. All rights reserved.

Table 200: Temperature Derating Parameters (Continued)

Parameter	Symbol	Min/ Max	Data Rate				Unit
			1600	3200	3733	4267	
Active bank A to active bank B (derated)	^{t}RRDd	Min	^{t}RRD + 1.875				ns

Note: 1. At higher temperatures (>85°C), AC timing derating may be required. If derating is required the device will set MR4 OP[2:0] = 110b.

Micron Technology, Inc. reserves the right to change products or specifications without notice.
© 2017 Micron Technology, Inc. All rights reserved.

CA Rx Voltage and Timing

The command and address (CA), including CS input receiver compliance mask for voltage and timing, is shown in the CA Receiver (Rx) Mask figure below. All CA and CS signals apply the same compliance mask and operate in single data rate mode.

The CA input Rx mask for voltage and timing is applied across all pins, as shown in the figure below. The Rx mask defines the area that the input signal must not encroach if the DRAM input receiver is expected to successfully capture a valid input signal; it is not the valid data eye.

Figure 166: CA Receiver (Rx) Mask

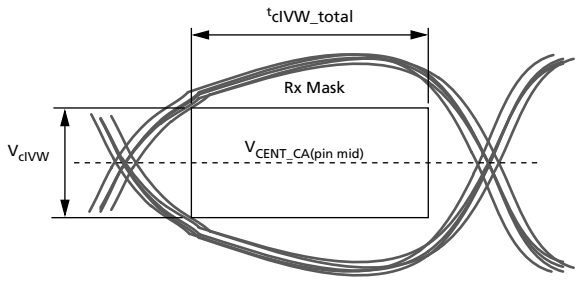

Figure 167: Across Pin $V_{REF\ (CA)}$ Voltage Variation

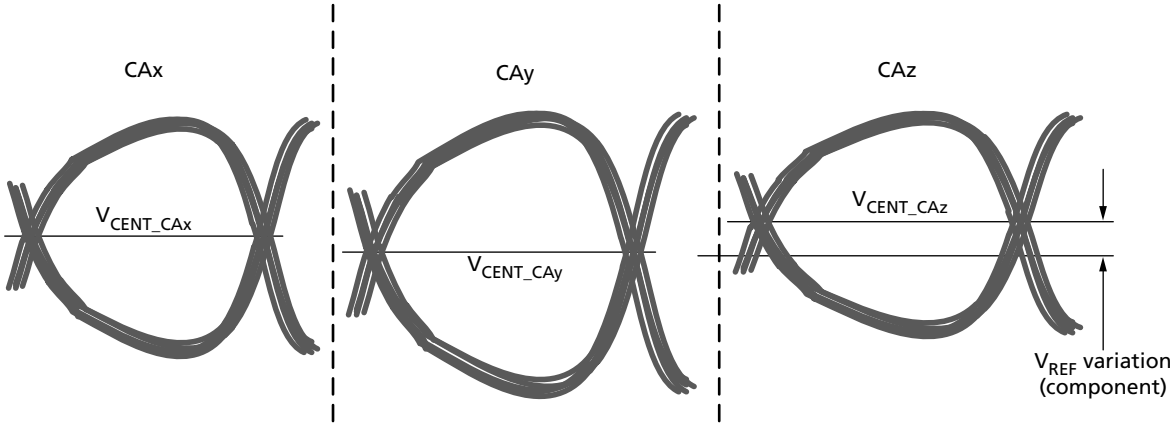

$V_{CENT_CA(pin\ mid)}$ is defined as the midpoint between the largest V_{CENT_CA} voltage level and the smallest V_{CENT_CA} voltage level across all CA and CS pins for a given DRAM component. Each CA V_{CENT} level is defined by the center, which is, the widest opening of the cumulative data input eye, as depicted in the figure above. This clarifies that any DRAM component level variation must be accounted for within the CA Rx mask. The component-level V_{REF} will be set by the system to account for R_{ON} and ODT settings.

Micron Technology, Inc. reserves the right to change products or specifications without notice.
© 2017 Micron Technology, Inc. All rights reserved.

Figure 168: CA Timings at the DRAM Pins

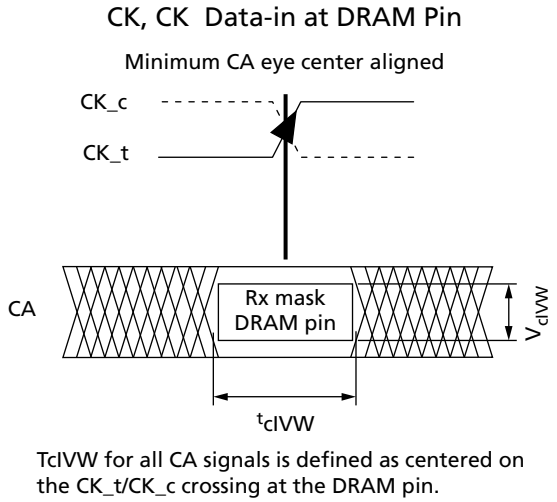

Note: 1. All of the timing terms in above figure are measured from the CK_t/CK_c to the center (midpoint) of the TcIVW window taken at the VcIVW_total voltage levels centered around $V_{CENT_CA(pin\ mid)}$.

Figure 169: CA ^{t}cIPW and SRIN_cIVW Definition (for Each Input Pulse)

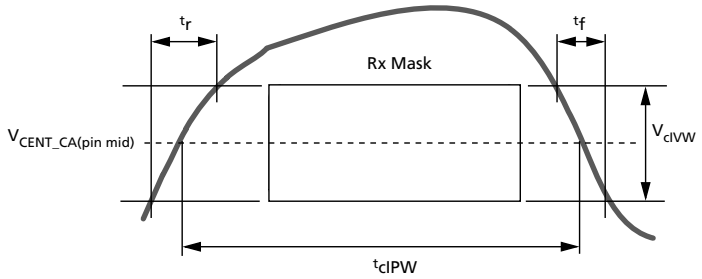

Note: 1. SRIN_cIVW = V_{dIVW_total}/(^{t}r or ^{t}f); signal must be monotonic within ^{t}r and ^{t}f range.

Figure 170: CA V_{IHL_AC} Definition (for Each Input Pulse)

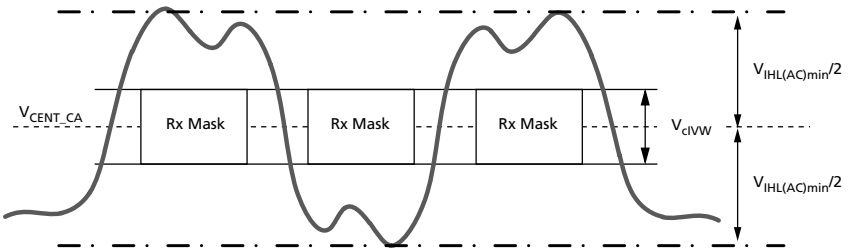

Micron Technology, Inc. reserves the right to change products or specifications without notice.
© 2017 Micron Technology, Inc. All rights reserved.

Table 201: DRAM CMD/ADR, CS

UI = ^{t}CK(AVG)MIN

Symbol	Parameter	DQ – 1333[7]		DQ – 1600/1867		DQ – 3200/3733		DQ – 4267		Unit	Notes
		Min	Max	Min	Max	Min	Max	Min	Max		
V_{clVW}	Rx mask voltage peak-to-peak	–	175	–	175	–	155	–	145	mV	1, 2, 3
$V_{IHL(AC)}$	CA AC input pulse amplitude peak-to-peak	210	–	210	–	190	–	180	–	mV	4, 6
SRIN_clVW	Input slew rate over V_{clVW}	1	7	1	7	1	7	1	7	V/ns	5

Notes:
1. CA Rx mask voltage and timing parameters at the pin, including voltage and temperature drift.
2. Rx mask voltage V_{clVW} total(MAX) must be centered around $V_{CENT_CA(pin\ mid)}$.
3. Defined over the CA internal V_{REF} range. The Rx mask at the pin must be within the internal $V_{REF(CA)}$ range irrespective of the input signal common mode.
4. CA-only input pulse signal amplitude into the receiver must meet or exceed $V_{IHL(AC)}$ at any point over the total UI. No timing requirement above level. $V_{IHL(AC)}$ is the peak-to-peak voltage centered around $V_{CENT_CA(pin\ mid)}$, such that $V_{IHL(AC)}/2$ (MIN) must be met both above and below V_{CENT_CA}.
5. Input slew rate over V_{clVW} mask is centered at $V_{CENT_CA(pin\ mid)}$.
6. $V_{IHL(AC)}$ does not have to be met when no transitions are occurring.
7. The Rx voltage and absolute timing requirements apply for DQ operating frequencies at or below 1333 for all speed bins. For example the ^{t}clVW (ps) = 450ps at or below 1333 operating frequencies.

Micron Technology, Inc. reserves the right to change products or specifications without notice.
© 2017 Micron Technology, Inc. All rights reserved.

DQ Tx Voltage and Timing

DRAM Data Timing

Figure 171: Read Data Timing Definitions – ^{t}QH and ^{t}DQSQ Across DQ Signals per DQS Group

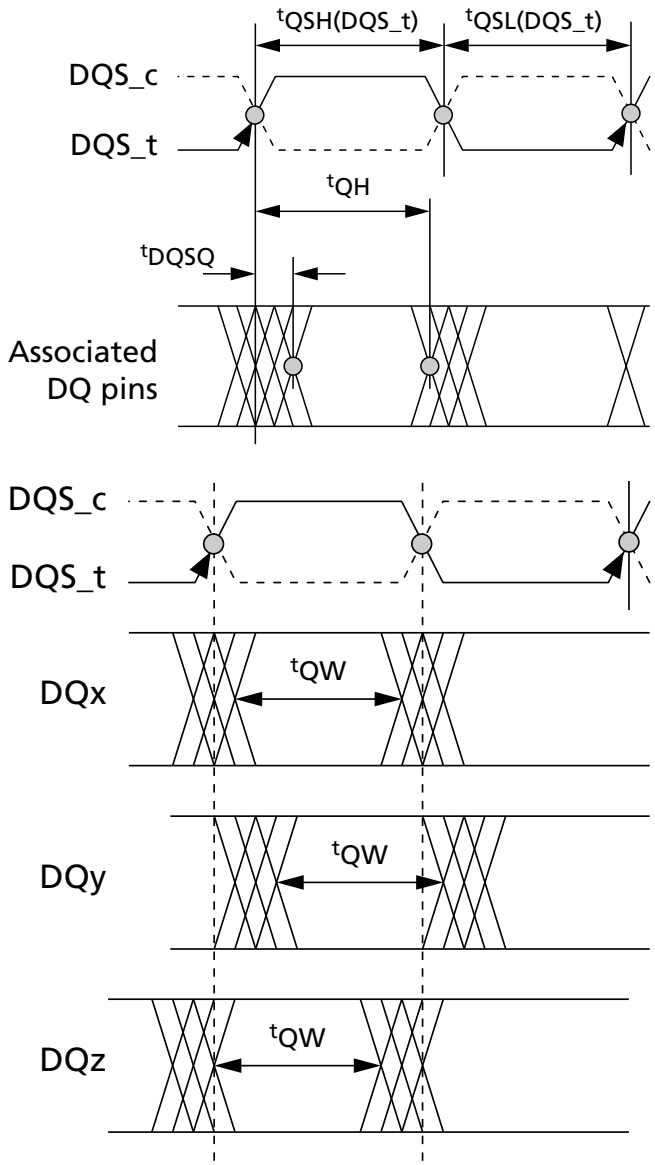

Micron Technology, Inc. reserves the right to change products or specifications without notice.
© 2017 Micron Technology, Inc. All rights reserved.

DQ Rx Voltage and Timing

The DQ input receiver mask for voltage and timing is applied per pin, as shown in the DQ Receiver (Rx) Mask figure below. The total mask (V_{dIVW_total}, TdIVW_total) defines the area that the input signal must not encroach in order for the DQ input receiver to successfully capture an input signal. The mask is a receiver property, and it is not the valid data eye.

Figure 172: DQ Receiver (Rx) Mask

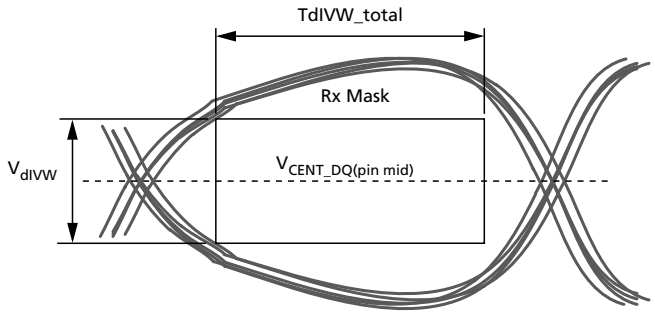

Figure 173: Across Pin V_{REF} DQ Voltage Variation

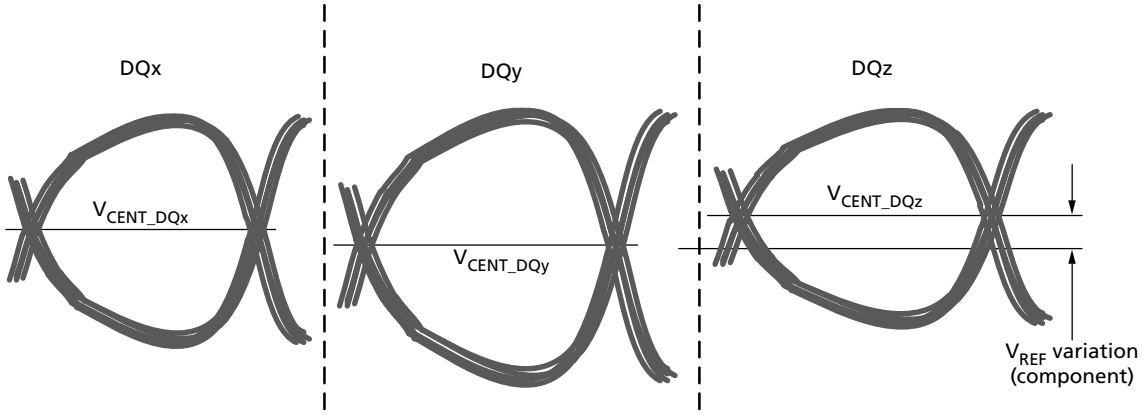

$V_{CENT_DQ(pin_mid)}$ is defined as the midpoint between the largest V_{CENT_DQ} voltage level and the smallest V_{CENT_DQ} voltage level across all DQ pins for a given DRAM component. Each V_{CENT_DQ} is defined by the center, which is the widest opening of the cumulative data input eye as shown in the figure above. This clarifies that any DRAM component level variation must be accounted for within the DRAM Rx mask. The component-level V_{REF} will be set by the system to account for R_{ON} and ODT settings.

Micron Technology, Inc. reserves the right to change products or specifications without notice.
© 2017 Micron Technology, Inc. All rights reserved.

Figure 174: DQ-to-DQS ^{t}DQS2DQ and ^{t}DQDQ

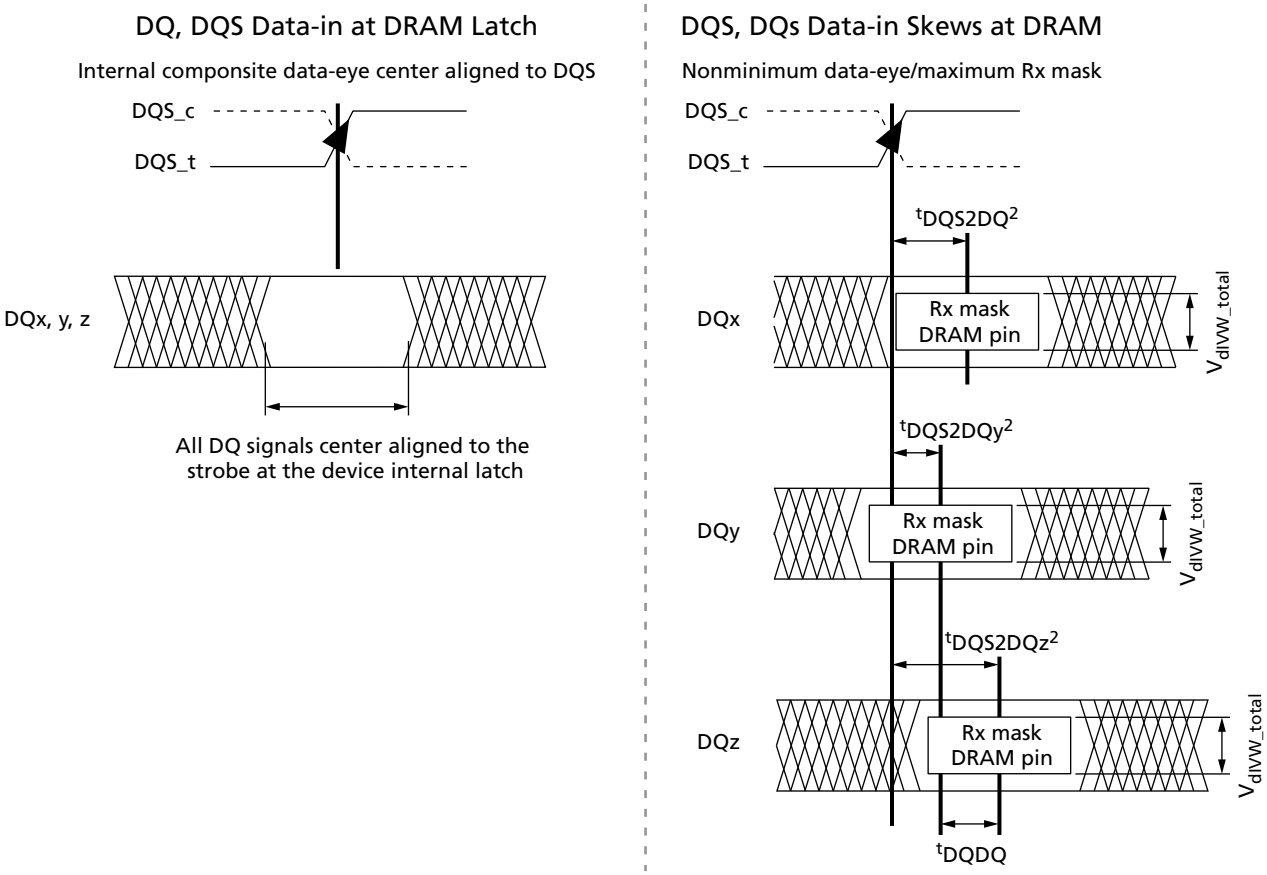

Notes:
1. These timings at the DRAM pins are referenced from the internal latch.
2. ^{t}DQS2DQ is measured at the center (midpoint) of the TdIVW window.
3. DQz represents the MAX ^{t}DQS2DQ in this example.
4. DQy represents the MIN ^{t}DQS2DQ in this example.

All of the timing terms in DQ to DQS_t are measured from the DQS_t/DQS_c to the center (midpoint) of the TdIVW window taken at the V_{dIVW_total} voltage levels centered around $V_{CENT_DQ(pin_mid)}$. In figure above, the timings at the pins are referenced with respect to all DQ signals center-aligned to the DRAM internal latch. The data-to-data offset is defined as the difference between the MIN and MAX ^{t}DQS2DQ for a given component.

Micron Technology, Inc. reserves the right to change products or specifications without notice.
© 2017 Micron Technology, Inc. All rights reserved.

Figure 175: DQ ^{t}DIPW and SRIN_dIVW Definition for Each Input Pulse

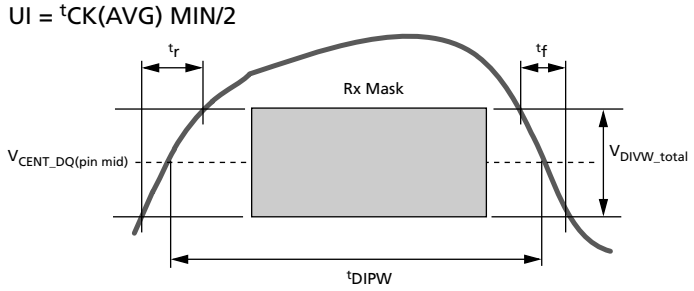

Note: 1. SRIN_dIVW = V_{dIVW_total}/(^{t}r or ^{t}f) signal must be monotonic within ^{t}r and ^{t}f range.

Figure 176: DQ $V_{IHL(AC)}$ Definition (for Each Input Pulse)

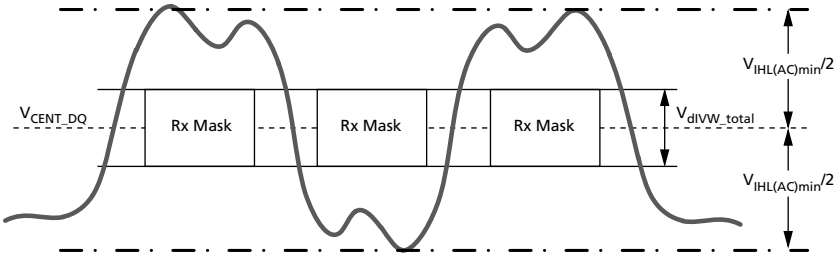

Table 202: DQs In Receive Mode

Note UI = ^{t}CK(AVG)(MIN)/2

Symbol	Parameter	1600/1867		2133/2400		3200/3733		4267		Unit	Notes
		Min	Max	Min	Max	Min	Max	Min	Max		
V_{dIVW_total}	Rx mask voltage – peak-to-peak	–	140	–	140	–	140	–	120	mV	1, 2, 3
$V_{IHL(AC)}$	DQ AC input pulse amplitude peak-to-peak	180	–	180	–	180	–	170	–	mV	5, 7
SRIN_dIVW	Input slew rate over V_{dIVW_total}	1	7	1	7	1	7	1	7	V/ns	6

Notes:
1. Data Rx mask voltage and timing parameters are applied per pin and include the DRAM DQ-to-DQS voltage AC noise impact for frequencies >20 MHz with a maximum voltage of 45mV peak-to-peak at a fixed temperature on the package. The voltage supply noise must comply to the component MIN/MAX DC operating conditions.
2. Rx mask voltage V_{dIVW_total}(MAX) must be centered around $V_{CENT_DQ(pin_mid)}$.
3. Defined over the DQ internal V_{REF} range. The Rx mask at the pin must be within the internal V_{REF} DQ range irrespective of the input signal common mode.
4. Deterministic component of the total Rx mask voltage or timing. Parameter will be characterized and guaranteed by design.
5. DQ-only input pulse amplitude into the receiver must meet or exceed $V_{IHL(AC)}$ at any point over the total UI. No timing requirement above level. $V_{IHL(AC)}$ is the peak-to-peak voltage centered around $V_{CENT_DQ(pin_mid)}$, such that $V_{IHL(AC)}$/2 (MIN) must be met both above and below V_{CENT_DQ}.
6. Input slew rate over V_{dIVW} mask centered at $V_{CENT_DQ(pin_mid)}$.

Micron Technology, Inc. reserves the right to change products or specifications without notice.
© 2017 Micron Technology, Inc. All rights reserved.

7. $V_{IHL(AC)}$ does not have to be met when no transitions are occurring.

Clock Specification

The specified clock jitter is a random jitter with Gaussian distribution. Input clocks violating minimum or maximum values may result in device malfunction.

Table 203: Definitions and Calculations

Symbol	Description	Calculation	Notes
^{t}CK(avg) and *n*CK	The average clock period across any consecutive 200-cycle window. Each clock period is calculated from rising clock edge to rising clock edge. Unit ^{t}CK(avg) represents the actual clock average ^{t}CK(avg) of the input clock under operation. Unit *n*CK represents one clock cycle of the input clock, counting from actual clock edge to actual clock edge. ^{t}CK(avg) can change no more than ±1% within a 100-clock-cycle window, provided that all jitter and timing specifications are met.	$^{t}CK(avg) = \left(\sum_{j=1}^{N} {}^{t}CK_j\right)/N$ Where N = 200	
^{t}CK(abs)	The absolute clock period, as measured from one rising clock edge to the next consecutive rising clock edge.		1
^{t}CH(avg)	The average HIGH pulse width, as calculated across any 200 consecutive HIGH pulses.	$^{t}CH(avg) = \left(\sum_{j=1}^{N} {}^{t}CH_j\right)/(N \times {}^{t}CK(avg))$ Where N = 200	
^{t}CL(avg)	The average LOW pulse width, as calculated across any 200 consecutive LOW pulses.	$^{t}CL(avg) = \left(\sum_{j=1}^{N} {}^{t}CL_j\right)/(N \times {}^{t}CK(avg))$ Where N = 200	
^{t}JIT(per)	The single-period jitter defined as the largest deviation of any signal ^{t}CK from ^{t}CK(avg).	$^{t}JIT(per) = \text{min/max of} \left({}^{t}CK_i - {}^{t}CK(avg)\right)$ Where i = 1 to 200	1
^{t}JIT(per),act	The actual clock jitter for a given system.		
^{t}JIT(per), allowed	The specified clock period jitter allowance.		
^{t}JIT(cc)	The absolute difference in clock periods between two consecutive clock cycles. ^{t}JIT(cc) defines the cycle-to-cycle jitter.	$^{t}JIT(cc) = \text{max of} \left({}^{t}CK_{i+1} - {}^{t}CK_i\right)$	1
^{t}ERR(nper)	The cumulative error across *n* multiple consecutive cycles from ^{t}CK(avg).	$^{t}ERR(nper) = \left(\sum_{j=i}^{i+n-1} {}^{t}CK_j\right) - (n \times {}^{t}CK(avg))$	1
^{t}ERR(nper),act	The actual clock jitter over *n* cycles for a given system.		

Micron Technology, Inc. reserves the right to change products or specifications without notice.
© 2017 Micron Technology, Inc. All rights reserved.

Table 203: Definitions and Calculations (Continued)

Symbol	Description	Calculation	Notes
^{t}ERR(nper), allowed	The specified clock jitter allowance over *n* cycles.		
^{t}ERR(nper),min	The minimum ^{t}ERR(nper).	^{t}ERR(nper),min = (1 + 0.68LN(n)) × ^{t}JIT(per),min	2
^{t}ERR(nper),max	The maximum ^{t}ERR(nper).	^{t}ERR(nper),max = (1 + 0.68LN(n)) × ^{t}JIT(per),max	2
^{t}JIT(duty)	Defined with absolute and average specifications for ^{t}CH and ^{t}CL, respectively.	^{t}JIT(duty),min = MIN((^{t}CH(abs),min – ^{t}CH(avg),min), (^{t}CL(abs),min – ^{t}CL(avg),min)) × ^{t}CK(avg) ^{t}JIT(duty),max = MAX((^{t}CH(abs),max – ^{t}CH(avg),max), (^{t}CL(abs),max – ^{t}CL(avg),max)) × ^{t}CK(avg)	

Notes: 1. Not subject to production testing.
2. Using these equations, ^{t}ERR(nper) tables can be generated for each ^{t}JIT(per),act value.

^{t}CK(abs), ^{t}CH(abs), and ^{t}CL(abs)

These parameters are specified with their average values; however, the relationship between the average timing and the absolute instantaneous timing (defined in the following table) is applicable at all times.

Table 204: ^{t}CK(abs), ^{t}CH(abs), and ^{t}CL(abs) Definitions

Parameter	Symbol	Minimum	Unit
Absolute clock period	^{t}CK(abs)	^{t}CK(avg),min + ^{t}JIT(per),min	ps[1]
Absolute clock HIGH pulse width	^{t}CH(abs)	^{t}CH(avg),min + ^{t}JIT(duty),min[2]/^{t}CK(avg),min	^{t}CK(avg)
Absolute clock LOW pulse width	^{t}CL(abs)	^{t}CL(avg),min + ^{t}JIT(duty),min[2]/^{t}CK(avg),min	^{t}CK(avg)

Notes: 1. ^{t}CK(avg),min is expressed in ps for this table.
2. ^{t}JIT(duty),min is a negative value.

Clock Period Jitter

LPDDR4 devices can tolerate some clock period jitter without core timing parameter derating. This section describes device timing requirements with clock period jitter (^{t}JIT(per)) in excess of the values found in the AC Timing table. Calculating cycle time derating and clock cycle derating are also described.

Clock Period Jitter Effects on Core Timing Parameters

Core timing parameters (^{t}RCD, ^{t}RP, ^{t}RTP, ^{t}WR, ^{t}WRA, ^{t}WTR, ^{t}RC, ^{t}RAS, ^{t}RRD, ^{t}FAW) extend across multiple clock cycles. Clock period jitter impacts these parameters when measured in numbers of clock cycles. Within the specification limits, the device is characterized and verified to support ^{t}nPARAM = RU[^{t}PARAM/^{t}CK(avg)]. During device operation where clock jitter is outside specification limits, the number of clocks, or ^{t}CK(avg), may need to be increased based on the values for each core timing parameter.

Micron Technology, Inc. reserves the right to change products or specifications without notice.
© 2017 Micron Technology, Inc. All rights reserved.

Cycle Time Derating for Core Timing Parameters

For a given number of clocks (^{t}nPARAM), when ^{t}CK(avg) and ^{t}ERR(^{t}nPARAM),act exceed ^{t}ERR(^{t}nPARAM),allowed, cycle time derating may be required for core timing parameters.

$$\text{CycleTimeDerating} = \max\left\{\left(\frac{{}^{t}\text{PARAM} + {}^{t}\text{ERR}({}^{t}\text{nPARAM}),\text{act} - {}^{t}\text{ERR}({}^{t}\text{nPARAM}),\text{allowed}}{{}^{t}\text{nPARAM}} - {}^{t}\text{CK(avg)}\right), 0\right\}$$

Cycle time derating analysis should be conducted for each core timing parameter. The amount of cycle time derating required is the maximum of the cycle time deratings determined for each individual core timing parameter.

Clock Cycle Derating for Core Timing Parameters

For each core timing parameter and a given number of clocks (^{t}nPARAM), clock cycle derating should be specified with ^{t}JIT(per).

For a given number of clocks (^{t}nPARAM), when ^{t}CK(avg) plus (^{t}ERR(^{t}nPARAM),act) exceed the supported cumulative ^{t}ERR(^{t}nPARAM),allowed, derating is required. If the equation below results in a positive value for a core timing parameter (^{t}CORE), the required clock cycle derating will be that positive value (in clocks).

$$\text{ClockCycleDerating} = \text{RU}\left\{\frac{{}^{t}\text{PARAM} + {}^{t}\text{ERR}({}^{t}\text{nPARAM}),\text{act} - {}^{t}\text{ERR}({}^{t}\text{nPARAM}),\text{allowed}}{{}^{t}\text{CK(avg)}}\right\} - {}^{t}\text{nPARAM}$$

Cycle-time derating analysis should be conducted for each core timing parameter.

Clock Jitter Effects on Command/Address Timing Parameters

Command/address timing parameters (^{t}IS, ^{t}IH, ^{t}ISb, ^{t}IHb) are measured from a command/address signal (CS or CA[5:0]) transition edge to its respective clock signal (CK_t/CK_c) crossing. The specification values are not affected by the ^{t}JIT(per) applied, because the setup and hold times are relative to the clock signal crossing that latches the command/address. Regardless of clock jitter values, these values must be met.

Clock Jitter Effects on READ Timing Parameters

^{t}RPRE

When the device is operated with input clock jitter, ^{t}RPRE must be derated by the ^{t}JIT(per),act,max of the input clock that exceeds ^{t}JIT(per),allowed,max. Output deratings are relative to the input clock:

$${}^{t}\text{RPRE(min,derated)} = 0.9 - \left(\frac{{}^{t}\text{JIT(per)},\text{act,max} - {}^{t}\text{JIT(per)},\text{allowed,max}}{{}^{t}\text{CK(avg)}}\right)$$

For example, if the measured jitter into a LPDDR4 device has ^{t}CK(avg) = 625ps, ^{t}JIT(per),act,min = –xx, and ^{t}JIT(per),act,max = +xx ps, then ^{t}RPRE,min,derated = 0.9 - (^{t}JIT(per),act,max - ^{t}JIT(per),allowed,max)/^{t}CK(avg) = 0.9 - (xx - xx)/xx = yy ^{t}CK(avg).

Micron Technology, Inc. reserves the right to change products or specifications without notice.
© 2017 Micron Technology, Inc. All rights reserved.

^{t}LZ(DQ), ^{t}HZ(DQ), ^{t}DQSCK, ^{t}LZ(DQS), ^{t}HZ(DQS)

These parameters are measured from a specific clock edge to a data signal transition (DM*n* or DQ*m*, where: *n* = 0,1; and *m* = 0–15, and specified timings must be met with respect to that clock edge. Therefore, they are not affected by ^{t}JIT(per).

^{t}QSH, ^{t}QSL

These parameters are affected by duty cycle jitter, represented by ^{t}CH(abs)min and ^{t}CL(abs)min. These parameters determine the absolute data-valid window at the device pin. The absolute minimum data-valid window at the device pin = MIN {(^{t}QSH(abs)min - ^{t}DQSQmax), (^{t}QSL(abs)min - ^{t}DQSQmax)}. This minimum data valid window must be met at the target frequency regardless of clock jitter.

^{t}RPST

^{t}RPST is affected by duty cycle jitter, represented by ^{t}CL(abs). Therefore, ^{t}RPST(abs)min can be specified by ^{t}CL(abs)min. ^{t}RPST(abs)min = ^{t}CL(abs)min - 0.05 = ^{t}QSL(abs)min.

Clock Jitter Effects on WRITE Timing Parameters

^{t}DS, ^{t}DH

These parameters are measured from a data signal (DMI*n or* DQ*m*, where *n* = 0, 1 and *m* = 0–15) transition edge to its respective data strobe signal (DQSn_t, DQSn_c: *n* = 0,1) crossing. The specification values are not affected by the amount of ^{t}JIT(per) applied, because the setup and hold times are relative to the data strobe signal crossing that latches the command/address. Regardless of clock jitter values, these values must be met.

^{t}DSS, ^{t}DSH

These parameters are measured from a data signal (DQS_t, DQSn_c) crossing to its respective clock signal (CK_t, CK_c) crossing. When the device is operated with input clock jitter, this parameter needs to be derated by the actual $t_{JIT(per)act}$ of the input clock in excess of the allowed period jitter $t_{JIT(per)allowed}$.

^{t}DQSS

^{t}DQSS is measured from a data strobe signal (DQSn_t, DQSn_c) crossing to its respective clock signal (CK_t, CK_c) crossing. When the device is operated with input clock jitter, this parameter must be derated by the actual ^{t}JIT(per),act of the input clock in excess of ^{t}JIT(per)allowed.

$$^{t}\text{DQSS(min,derated)} = 0.75 - \left(\frac{^{t}\text{JIT(per),act,min} - {}^{t}\text{JIT(per),allowed, min}}{^{t}\text{CK(avg)}}\right)$$

$$^{t}\text{DQSS(max,derated)} = 1.25 - \left(\frac{^{t}\text{JIT(per),act,max} - {}^{t}\text{JIT(per),allowed, max}}{^{t}\text{CK(avg)}}\right)$$

For example, if the measured jitter into an LPDDR4 device has ^{t}CK(avg) = 625ps, ^{t}JIT(per),act,min = -xxps, and ^{t}JIT(per),act,max = +xx ps, then:

^{t}DQSS,(min,derated) = 0.75 - (-xx + yy)/625 = xxxx ^{t}CK(avg)

^{t}DQSS,(max,derated) = 1.25 - (xx – yy)/625 = xxxx ^{t}CK(avg)

Micron Technology, Inc. reserves the right to change products or specifications without notice.
© 2017 Micron Technology, Inc. All rights reserved.

LPDDR4 1.10V V_{DDQ}

This section defines LPDDR4 specifications to enable 1.10 V_{DDQ} operation of LPDDR4 devices.

Power-Up and Initialization - LPDDR4

To ensure proper functionality for power-up and reset initialization, default values for the MR settings are provided in the table below.

Table 205: Mode Register Default Settings

Item	Mode Register Setting	Default Setting	Description
FSP-OP/WR	MR13 OP[7:6]	00b	FSP-OP/WR[0] are enabled
WLS	MR2 OP[6]	0b	WRITE latency set A is selected
WL	MR2 OP[5:3]	000b	WL = 4
RL	MR2 OP[2:0]	000b	RL = 6, *n*RTP = 8
*n*WR	MR1 OP[6:4]	000b	*n*WR = 6
DBI-WR/RD	MR3 OP[7:6]	00b	Write and read DBI are disabled
CA ODT	MR11 OP[6:4]	000b	CA ODT is disabled
DQ ODT	MR11 OP[2:0]	000b	DQ ODT is disabled
$V_{REF(CA)}$ setting	MR12 OP[6]	1b	$V_{REF(CA)}$ range[1] is enabled
$V_{REF(CA)}$ value	MR12 OP[5:0]	001101b	Range1: 27.2% of V_{DD2}
$V_{REF(DQ)}$ setting	MR14 OP[6]	1b	$V_{REF(DQ)}$ range[1] enabled
$V_{REF(DQ)}$ value	MR14 OP[5:0]	001101b	Range1: 27.2% of V_{DDQ}

Micron Technology, Inc. reserves the right to change products or specifications without notice.
© 2017 Micron Technology, Inc. All rights reserved.

Mode Register Definition - LPDDR4

Mode register definitions are provided in the Mode Register Assignments table. In the access column of the table, R indicates read-only; W indicates write-only; R/W indicates read- or write-capable or enabled. The MRR command is used to read from a register. The MRW command is used to write to a register.

Table 206: Mode Register Assignments

Notes 1–5 apply to entire table

MR#	MA[5:0]	Function	Access	OP7	OP6	OP5	OP4	OP3	OP2	OP1	OP0
0	00h	Device info	R	CATR	RFU	RFU	RZQI		RFU	Latency mode	REF
1	01h	Device feature 1	W	RD-PST	*n*WR (for AP)			RD-PRE	WR-PRE	BL	
2	02h	Device feature 2	W	WR Lev	WLS	WL			RL		
3	03h	I/O config-1	W	DBI-WR	DBI-RD	PDDS			PPRP	WR-PST	PU-CAL
4	04h	Refresh and training	R /W	TUF	Thermal offset		PPRE	SR abort	Refresh rate		
5	05h	Basic config-1	R	Manufacturer ID							
6	06h	Basic config-2	R	Revision ID1							
7	07h	Basic config-3	R	Revision ID2							
8	08h	Basic config-4	R	I/O width		Density				Type	
9	09h	Test mode	W	Vendor-specific test mode							
10	0Ah	I/O calibration	W	RFU							ZQ RST
11	0Bh	ODT	W	RFU	CA ODT			RFU	DQ ODT		
12	0Ch	$V_{REF(CA)}$	R/W	RFU	VR_{CA}	$V_{REF(CA)}$					
13	0Dh	Register control	W	FSP-OP	FSP-WR	DMD	RRO	VRCG	VRO	RPT	CBT
14	0Eh	$V_{REF(DQ)}$	R/W	RFU	VR_{DQ}	$V_{REF(DQ)}$					
15	0Fh	DQI-LB	W	Lower-byte invert register for DQ calibration							
16	10h	PASR_Bank	W	PASR bank mask							
17	11h	PASR_Seg	W	PASR segment mask							
18	12h	IT-LSB	R	DQS oscillator count – LSB							
19	13h	IT-MSB	R	DQS oscillator count – MSB							
20	14h	DQI-UB	W	Upper-byte invert register for DQ calibration							
21	15h	Vendor use	W	RFU							
22	16h	ODT feature 2	W	ODTD for x8_2ch		ODTD-CA	ODTE-CS	ODTE-CK	SoC ODT		
23	17h	DQS oscillator stop	W	DQS oscillator run-time setting							
24	18h	TRR control	R/W	TRR mode	TRR mode BAn			Unltd MAC	MAC value		
25	19h	PPR resources	R	B7	B6	B5	B4	B3	B2	B1	B0
26–29	1Ah~1Dh	–	–	Reserved for future use							

Micron Technology, Inc. reserves the right to change products or specifications without notice.
© 2017 Micron Technology, Inc. All rights reserved.

Table 206: Mode Register Assignments (Continued)

Notes 1–5 apply to entire table

MR#	MA[5:0]	Function	Access	OP7	OP6	OP5	OP4	OP3	OP2	OP1	OP0
30	1Eh	Reserved for test	W	SDRAM will ignore							
31	1Fh	–	–	Reserved for future use							
32	20h	DQ calibration pattern A	W	See DQ calibration section							
33–38	21h≈26h	Do not use	–	Do not use							
39	27h	Reserved for test	W	SDRAM will ignore							
40	28h	DQ calibration pattern B	W	See DQ calibration section							
41–47	29h≈2Fh	Do not use	–	Do not use							
48–63	30h≈3Fh	Reserved	–	Reserved for future use							

Notes:
1. RFU bits must be set to 0 during MRW commands.
2. RFU bits are read as 0 during MRR commands.
3. All mode registers that are specified as RFU or write-only shall return undefined data when read via an MRR command.
4. RFU mode registers must not be written.
5. Writes to read-only registers will not affect the functionality of the device.

Table 207: MR0 Device Feature 0 (MA[5:0] = 00h)

OP7	OP6	OP5	OP4	OP3	OP2	OP1	OP0
CATR	RFU		RZQI		RFU	Latency mode	REF

Table 208: MR0 Op-Code Bit Definitions

Register Information	Type	OP	Definition	Notes
Refresh mode	Read only	OP[0]	0b: Both legacy and modified refresh mode supported 1b: Only modified refresh mode supported	
Latency mode	Read only	OP[1]	0b: Device supports normal latency 1b: Device supports byte mode latency	5, 6
Built-in self-test for RZQ information	Read only	OP[4:3]	00b: RZQ self-test not supported 01b: ZQ may connect to V_{SSQ} or float 10b: ZQ may short to V_{DDQ} 11b: ZQ pin self-test completed, no error condition detected (ZQ may not connect to V_{SSQ}, float, or short to V_{DDQ})	1–4

Micron Technology, Inc. reserves the right to change products or specifications without notice.
© 2017 Micron Technology, Inc. All rights reserved.

Table 208: MR0 Op-Code Bit Definitions (Continued)

Register Information	Type	OP	Definition	Notes
CA terminating rank	Read only	OP[7]	0b: CA for this rank is not terminated 1b: CA for this rank is terminated	7

Notes:
1. RZQI MR value, if supported, will be valid after the following sequence:
   - Completion of MPC[ZQCAL START] command to either channel
   - Completion of MPC[ZQCAL LATCH] command to either channel then ^{t}ZQLAT is satisfied

   RZQI value will be lost after reset.
2. If ZQ is connected to V_{SSQ} to set default calibration, OP[4:3] must be set to 01b. If ZQ is not connected to V_{SSQ}, either OP[4:3] = 01b or OP[4:3] = 10b might indicate a ZQ pin assembly error. It is recommended that the assembly error be corrected.
3. In the case of possible assembly error, the device will default to factory trim settings for R_{ON}, and will ignore ZQ CALIBRATION commands. In either case, the device may not function as intended.
4. If the ZQ pin self-test returns OP[4:3] = 11b, the device has detected a resistor connected to the ZQ pin. However, this result cannot be used to validate the ZQ resistor value or that the ZQ resistor meets the specified limits (that is, 240Ω ±1%).
5. See byte mode addendum spec for byte mode latency details.
6. Byte mode latency for 2Ch. x16 device is only allowed when it is stacked in a same package with byte mode device.
7. CATR indicates whether CA for the rank will be terminated or not as a result of ODTCA pad connection and MR22 OP[5] settings for x16 devices, MR22 OP[7:5] settings for byte mode devices.

Table 209: MR3 I/O Configuration 1 (MA[5:0] = 03h)

OP7	OP6	OP5	OP4	OP3	OP2	OP1	OP0
DBI-WR	DBI-RD	PDDS			PPRP	WR-PST	PU-CAL

Micron Technology, Inc. reserves the right to change products or specifications without notice.
© 2017 Micron Technology, Inc. All rights reserved.

Table 210: MR3 Op-Code Bit Definitions

Feature	Type	OP	Definition	Notes
PU-CAL (Pull-up calibration point)	Write-only	OP[0]	0b: V_{DDQ}/2.5 1b: V_{DDQ}/3 (default)	1-4
WR-PST (WR postamble length)		OP[1]	0b: WR postamble = 0.5 × ^{t}CK (default) 1b: WR postamble = 1.5 × ^{t}CK	2, 3, 5
PPRP (Post-package repair protection)		OP[2]	0b: PPR protection disabled (default) 1b: PPR protection enabled	6
PDDS (Pull-down drive strength)		OP[5:3]	000b: RFU 001b: R_{ZQ}/1 010b: R_{ZQ}/2 011b: R_{ZQ}/3 100b: R_{ZQ}/4 101b: R_{ZQ}/5 110b:R_{ZQ}/6 (default) 111b: Reserved	1, 2, 3
DBI-RD (DBI-read enable)		OP[6]	0b: Disabled (default) 1b: Enabled	2, 3
DBI-WR (DBI-write enable)		OP[7]	0b: Disabled (default) 1b: Enabled	2, 3

Notes:
1. All values are typical. The actual value after calibration will be within the specified tolerance for a given voltage and temperature. Recalibration may be required as voltage and temperature vary.
2. There are two physical registers assigned to each bit of this MR parameter, designated set point 0 and set point 1. Only the registers for the set point determined by the state of the FSP-WR bit (MR13 OP[6]) will be written to with an MRW command to this MR address, or read from with an MRR command to this address.
3. There are two physical registers assigned to each bit of this MR parameter, designated set point 0 and set point 1.The device will operate only according to the values stored in the registers for the active set point, for example, the set point determined by the state of the FSP-OP bit (MR13 OP[7]). The values in the registers for the inactive set point will be determined by the state of the FSP-OP bit (MR13 OP[7]). The values in the registers for the inactive set point will be ignored by the device, and may be changed without affecting device operation.
4. For dual channel device, PU-CAL (MR3-OP[0]) must be set the same for both channels on a die. The SDRAM will read the value of only one register (Ch.A or Ch.B), vendor-specific, so both channels must be set the same.
5. 1.5 × ^{t}CK apply > 1.6 GHz clock.
6. If MR3 OP[2] is set to 1b, PPR protection mode is enabled. The PPR protection bit is a sticky bit and can only be set to 0b by a power on reset. MR4 OP[4] controls entry to PPR mode. If PPR protection is enabled then the DRAM will not allow writing of 1b to MR4 OP[4].

Micron Technology, Inc. reserves the right to change products or specifications without notice.
© 2017 Micron Technology, Inc. All rights reserved.

Table 211: MR12 Register Information (MA[5:0] = 0Ch)

OP7	OP6	OP5	OP4	OP3	OP2	OP1	OP0
RFU	VR_{CA}	$V_{REF(CA)}$					

Table 212: MR12 Op-Code Bit Definitions

Feature	Type	OP	Data	Notes
$V_{REF(CA)}$ $V_{REF(CA)}$ settings	Read/ Write	OP[5:0]	000000b–110010b: See V_{REF} Settings Table All others: Reserved	1–3, 5, 6
VR_{CA} $V_{REF(CA)}$ range	Read/ Write	OP[6]	0b: $V_{REF(CA)}$ range[0] enabled 1b: $V_{REF(CA)}$ range[1] enabled (default)	1, 2, 4, 5, 6

Notes:
1. This register controls the $V_{REF(CA)}$ levels for frequency set point[1:0]. Values from either VR(ca)[0] or VR(ca)[1] may be selected by setting MR12 OP[6] appropriately.
2. A read to MR12 places the contents of OP[7:0] on DQ[7:0]. Any RFU bits and unused DQ will be set to 0. See the MRR Operation section.
3. A write to MR12 OP[5:0] sets the internal $V_{REF(CA)}$ level for FSP[0] when MR13 OP[6] = 0b or sets the internal $V_{REF(CA)}$ level for FSP[1] when MR13 OP[6] = 1b. The time required for $V_{REF(CA)}$ to reach the set level depends on the step size from the current level to the new level. See the $V_{REF(CA)}$ training section.
4. A write to MR12 OP[6] switches the device between two internal $V_{REF(CA)}$ ranges. The range (range[0] or range[1]) must be selected when setting the $V_{REF(CA)}$ register. The value, once set, will be retained until overwritten or until the next power-on or reset event.
5. There are two physical registers assigned to each bit of this MR parameter, designated set point 0 and set point 1. Only the registers for the set point determined by the state of the FSP-WR bit (MR13 OP[6]) will be written to with an MRW command to this MR address, or read from with an MRR command to this address.
6. There are two physical registers assigned to each bit of this MR parameter, designated set point 0 and set point 1. The device will operate only according to the values stored in the registers for the active set point, for example, the set point determined by the state of the FSP-OP bit (MR13 OP[7]). The values in the registers for the inactive set point will be ignored by the device, and may be changed without affecting device operation.

Table 213: Mode Register 14 (MA[5:0] = 0Eh)

OP[7]	OP[6]	OP[5]	OP[4]	OP[3]	OP[2]	OP[1]	OP[0]
RFU	VR_{DQ}	$V_{REF(DQ)}$					

Micron Technology, Inc. reserves the right to change products or specifications without notice.
© 2017 Micron Technology, Inc. All rights reserved.

Table 214: MR14 Op-Code Bit Definition

Feature	Type	OP	Definition	Notes
$V_{REF(DQ)}$ $V_{REF(DQ)}$ setting	Read/ Write	OP[5:0]	000000b–110010b: See V_{REF} Settings table All others: Reserved	1–3, 5, 6
VR_{DQ} $V_{REF(DQ)}$ range		OP[6]	0b: $V_{REF(DQ)}$ range[0] enabled 1b: $V_{REF(DQ)}$ range[1] enabled (default)	1, 2, 4–6

Notes:
1. This register controls the $V_{REF(DQ)}$ levels for frequency set point[1:0]. Values from either VR_{DQ} [vendor defined] or VR_{DQ} [vendor defined] may be selected by setting OP[6] appropriately.
2. A read (MRR) to this register places the contents of OP[7:0] on DQ[7:0]. Any RFU bits and unused DQ will be set to 0. See the MRR Operation section.
3. A write to OP[5:0] sets the internal $V_{REF(DQ)}$ level for FSP[0] when MR13 OP[6] = 0b, or sets FSP[1] when MR13 OP[6] = 1b. The time required for $V_{REF(DQ)}$ to reach the set level depends on the step size from the current level to the new level. See the $V_{REF(DQ)}$ training section.
4. A write to OP[6] switches the device between two internal $V_{REF(DQ)}$ ranges. The range (range[0] or range[1]) must be selected when setting the $V_{REF(DQ)}$ register. The value, once set, will be retained until overwritten, or until the next power-on or reset event.
5. There are two physical registers assigned to each bit of this MR parameter, designated set point 0 and set point 1. Only the registers for the set point determined by the state of the FSP-WR bit (MR13 OP[6]) will be written to with an MRW command to this MR address, or read from with an MRR command to this address.
6. There are two physical registers assigned to each bit of this MR parameter, designated set point 0, and set point 1. The device will operate only according to the values stored in the registers for the active set point, for example, the set point determined by the state of the FSP-OP bit (MR13 OP[7]). The values in the registers for the inactive set point will be ignored by the device, and may be changed without affecting device operation.

Micron Technology, Inc. reserves the right to change products or specifications without notice.
© 2017 Micron Technology, Inc. All rights reserved.

Table 215: V_{REF} Setting for Range[0] and Range[1]

Notes 1–3 apply to entire table

Function	OP	Range[0] Values		Range[1] Values	
		$V_{REF(CA)}$ (% of V_{DD2})		$V_{REF(CA)}$ (% of V_{DD2})	
		$V_{REF(DQ)}$ (% of V_{DDQ})		$V_{REF(DQ)}$ (% of V_{DDQ})	
V_{REF} setting for MR12 and MR14	OP[5:0]	000000b: 10.0%	011010b: 20.4%	000000b: 22.0%	011010b: 32.4%
		000001b: 10.4%	011011b: 20.8%	000001b: 22.4%	011011b: 32.8%
		000010b: 10.8%	011100b: 21.2%	000010b: 22.8%	011100b: 33.2%
		000011b: 11.2%	011101b: 21.6%	000011b: 23.2%	011101b: 33.6%
		000100b: 11.6%	011110b: 22.0%	000100b: 23.6%	011110b: 34.0%
		000101b: 12.0%	011111b: 22.4%	000101b: 24.0%	011111b: 34.4%
		000110b: 12.4%	100000b: 22.8%	000110b: 24.4%	100000b: 34.8%
		000111b: 12.8%	100001b: 23.2%	000111b: 24.8%	100001b: 35.2%
		001000b: 13.2%	100010b: 23.6%	001000b: 25.2%	100010b: 35.6%
		001001b: 13.6%	100011b: 24.0%	001001b: 25.6%	100011b: 36.0%
		001010b: 14.0%	100100b: 24.4%	001010b: 26.0%	100100b: 36.4%
		001011b: 14.4%	100101b: 24.8%	001011b: 26.4%	100101b: 36.8%
		001100b: 14.8%	100110b: 25.2%	001100b: 26.8%	100110b: 37.2%
		001101b: 15.2%	100111b: 25.6%	001101b: 27.2% de-fault	100111b: 37.6%
		001110b: 15.6%	101000b: 26.0%	001110b: 27.6%	101000b: 38.0%
		001111b: 16.0%	101001b: 26.4%	001111b: 28.0%	101001b: 38.4%
		010000b: 16.4%	101010b: 26.8%	010000b: 28.4%	101010b: 38.8%
		010001b: 16.8%	101011b: 27.2%	010001b: 28.8%	101011b: 39.2%
		010010b: 17.2%	101100b: 27.6%	010010b: 29.2%	101100b: 39.6%
		010011b: 17.6%	101101b: 28.0%	010011b: 29.6%	101101b: 40.0%
		010100b: 18.0%	101110b: 28.4%	010100b: 30.0%	101110b: 40.4%
		010101b: 18.4%	101111b: 28.8%	010101b: 30.4%	101111b: 40.8%
		010110b: 18.8%	110000b: 29.2%	010110b: 30.8%	110000b: 41.2%
		010111b: 19.2%	110001b: 29.6%	010111b: 31.2%	110001b: 41.6%
		011000b: 19.6%	110010b: 30.0%	011000b: 31.6%	110010b: 42.0%
		011001b: 20.0%	All others: Reserved	011001b: 32.0%	All others: Reserved

Notes:
1. These values may be used for MR14 OP[5:0] and MR12 OP[5:0] to set the $V_{REF(CA)}$ or $V_{REF(DQ)}$ levels in the device.
2. The range may be selected in each of the MR14 or MR12 registers by setting OP[6] appropriately.
3. Each of the MR14 or MR12 registers represents either FSP[0] or FSP[1]. Two frequency set points each for CA and DQ are provided to allow for faster switching between terminated and unterminated operation or between different high-frequency settings, which may use different terminations values.

Micron Technology, Inc. reserves the right to change products or specifications without notice.
© 2017 Micron Technology, Inc. All rights reserved.

Table 216: MR22 Register Information (MA[5:0] = 16h)

OP7	OP6	OP5	OP4	OP3	OP2	OP1	OP0
ODTD for x8_2ch		ODTD-CA	ODTE-CS	ODTE-CK	SOC ODT		

Table 217: MR22 Register Information

Function	Type	OP	Data	Notes
SOC ODT (controller ODT value for V_{OH} calibration)	Write-only	OP[2:0]	000b: Disable (default) 001b: $R_{ZQ}/1$ 010b: $R_{ZQ}/2$ 011b: $R_{ZQ}/3$ 100b: $R_{ZQ}/4$ 101b: $R_{ZQ}/5$ 110b: $R_{ZQ}/6$ 111b: RFU	1, 2, 3
ODTE-CK (CK ODT enabled for non-terminating rank)	Write-only	OP[3]	0b: ODT-CK override disabled (default) 1b: ODT-CK override enabled	2, 3, 4, 6, 8
ODTE-CS (CS ODT enabled for non-terminating rank)	Write-only	OP[4]	0b: ODT-CS override disabled (default) 1b: ODT-CS override enabled	2, 3, 5, 6, 8
ODTD-CA (CA ODT termination disable)	Write-only	OP[5]	0b: CA ODT obeys ODT_CA bond pad (default) 1b: CA ODT disabled	2, 3, 6, 7, 8
ODTD for x8_2ch (Byte) mode	Write-only	OP[7:6]	See Byte Mode section	

Notes:
1. All values are typical.
2. There are two physical registers assigned to each bit of this MR parameter: designated set point 0 and set point 1. Only the registers for the set point determined by the state of the FSP-WR bit (MR13 OP[6]) will be written to with an MRW command or read from with an MRR command to this address.
3. There are two physical registers assigned to each bit of this MR parameter: designated set point 0 and set point 1. The device will operate only according to the values stored in the registers for the active set point determined by the state of the FSP-OP bit (MR13 OP[7]). The values in the registers for the inactive set point will be ignored by the device and may be changed without affecting device operation.
4. When OP[3] = 1 the CK signals will be terminated to the value set by MR11 OP[6:4] regardless of the state of the ODT_CA bond pad. This overrides the ODT_CA bond pad for configurations where CA is shared by two or more devices but CK is not, enabling CK to terminate on all devices.
5. When OP[4] = 1 the CS signal will be terminated to the value set by MR11 OP[6:4] regardless of the state of the ODT_CA bond pad. This overrides the ODT_CA bond pad for configurations where CA is shared by two or more devices but CS is not, enabling CS to terminate on all devices.
6. For system configurations where the CK, CS, and CA signals are shared between packages, the package design should provide for the ODT_CA ball to be bonded on the system board outside of the memory package. This provides the necessary control of the ODT function for all die with shared command bus signals.

Micron Technology, Inc. reserves the right to change products or specifications without notice.
© 2017 Micron Technology, Inc. All rights reserved.

7. When OP[5] = 0, CA[5:0] will terminate when the ODT_CA bond pad is HIGH and MR11 OP[6:4] is valid and disable termination when ODT_CA is LOW or MR11 OP[6:4] is disabled. When OP[5] = 1, termination for CA[5:0] is disabled regardless of the state of the ODT_CA bond pad or MR11 OP[6:4].
8. To ensure proper operation in a multi-rank configuration, when CA, CK or CS ODT is enabled via MR11 OP[6:4] and also via MR22 or ODT_CA pad setting, the rank providing ODT will continue to terminate the command bus in all DRAM states including Active, Self-refresh, Self-refresh Power-down, Active Power-down and Precharge Power-down.

Micron Technology, Inc. reserves the right to change products or specifications without notice.
© 2017 Micron Technology, Inc. All rights reserved.

Burst READ Operation - LPDDR4 ATE Condition

^{t}LZ(DQS), ^{t}LZ(DQ), ^{t}HZ(DQS), ^{t}HZ(DQ) Calculation

^{t}HZ and ^{t}LZ transitions occur in the same time window as valid data transitions. These parameters are referenced to a specific voltage level that specifies when the device output is no longer driving ^{t}HZ(DQS) and ^{t}HZ(DQ), or begins driving ^{t}LZ(DQS) and ^{t}LZ(DQ). This section shows a method to calculate the point when the device is no longer driving ^{t}HZ(DQS) and ^{t}HZ(DQ), or begins driving ^{t}LZ(DQS) and ^{t}LZ(DQ), by measuring the signal at two different voltages. The actual voltage measurement points are not critical as long as the calculation is consistent. The parameters ^{t}LZ(DQS), ^{t}LZ(DQ), ^{t}HZ(DQS), and ^{t}HZ(DQ) are defined as single ended.

^{t}LZ(DQS) and ^{t}HZ(DQS) Calculation for ATE (Automatic Test Equipment)

Figure 177: ^{t}LZ(DQS) Method for Calculating Transitions and Endpoint

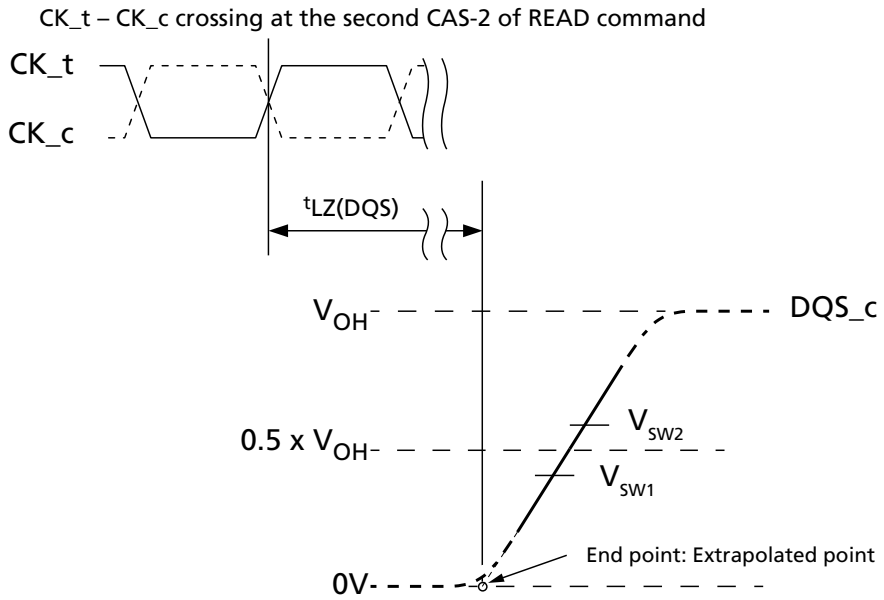

Notes:
1. Conditions for calibration: Pull down driver R_{ON} = 40 ohms, V_{OH} = V_{DDQ}/3.
2. Termination condition for DQS_t and DQS_C = 50 ohms to V_{SSQ}.
3. The V_{OH} level depends on MR22 OP[2:0] and MR3 OP[0] settings as well as device tolerances. Use the actual V_{OH} value for ^{t}HZ and ^{t}LZ measurements.

Micron Technology, Inc. reserves the right to change products or specifications without notice.
© 2017 Micron Technology, Inc. All rights reserved.

Figure 178: ^{t}HZ(DQS) Method for Calculating Transitions and Endpoint

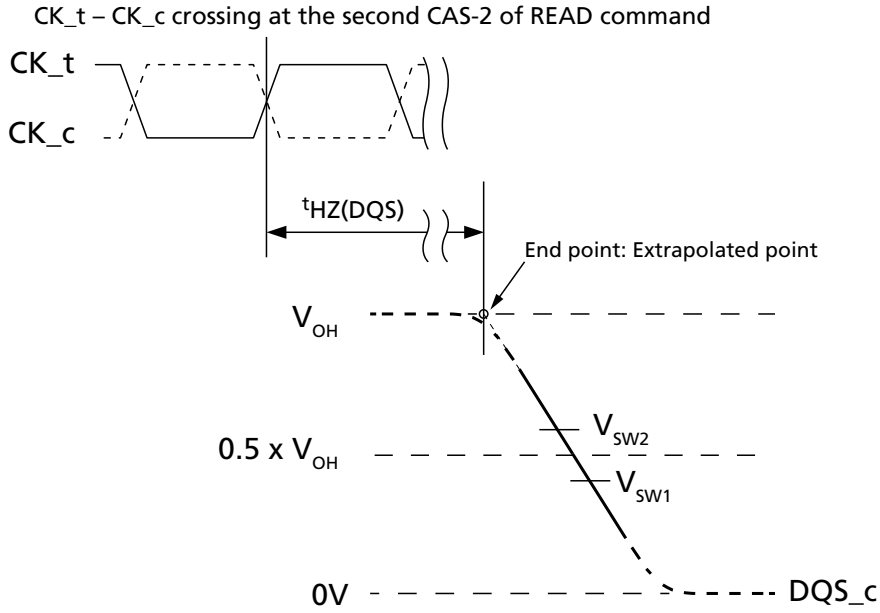

Notes:
1. Conditions for calibration: Pull down driver R_{ON} = 40 ohms, V_{OH} = V_{DDQ}/3.
2. Termination condition for DQS_t and DQS_C = 50 ohms to V_{SSQ}.
3. The V_{OH} level depends on MR22 OP[2:0] and MR3 OP[0] settings as well as device tolerances. Use the actual V_{OH} value for ^{t}HZ and ^{t}LZ measurements.

Table 218: Reference Voltage for ^{t}LZ(DQS), ^{t}HZ(DQS) Timing Measurements

Measured Parameter	Measured Parameter Symbol	Vsw1	Vsw2	Unit
DQS_c Low-Z time from CK_t, CK_c	^{t}LZ(DQS)	0.4 × V_{OH}	0.6 × V_{OH}	V
DQS_c High-Z time from CK_t, CK_c	^{t}HZ(DQS)	0.4 × V_{OH}	0.6 × V_{OH}	

Micron Technology, Inc. reserves the right to change products or specifications without notice.
© 2017 Micron Technology, Inc. All rights reserved.

^{t}LZ(DQ) and ^{t}HZ(DQ) Calculation for ATE (Automatic Test Equipment)

Figure 179: ^{t}LZ(DQ) Method for Calculating Transitions and Endpoint

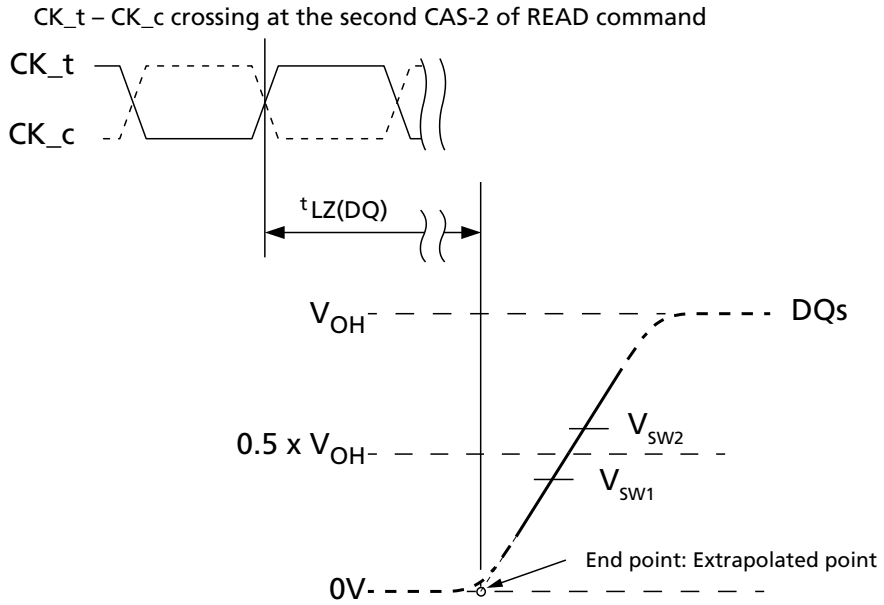

Notes:
1. Conditions for calibration: Pull down driver R_{ON} = 40 ohms, V_{OH} = V_{DDQ}/3.
2. Termination condition for DQ and DMI = 50 ohms to V_{SSQ}.
3. The V_{OH} level depends on MR22 OP[2:0] and MR3 OP[0] settings as well as device tolerances. Use the actual V_{OH} value for ^{t}HZ and ^{t}LZ measurements.

Figure 180: ^{t}HZ(DQ) Method for Calculating Transitions and Endpoint

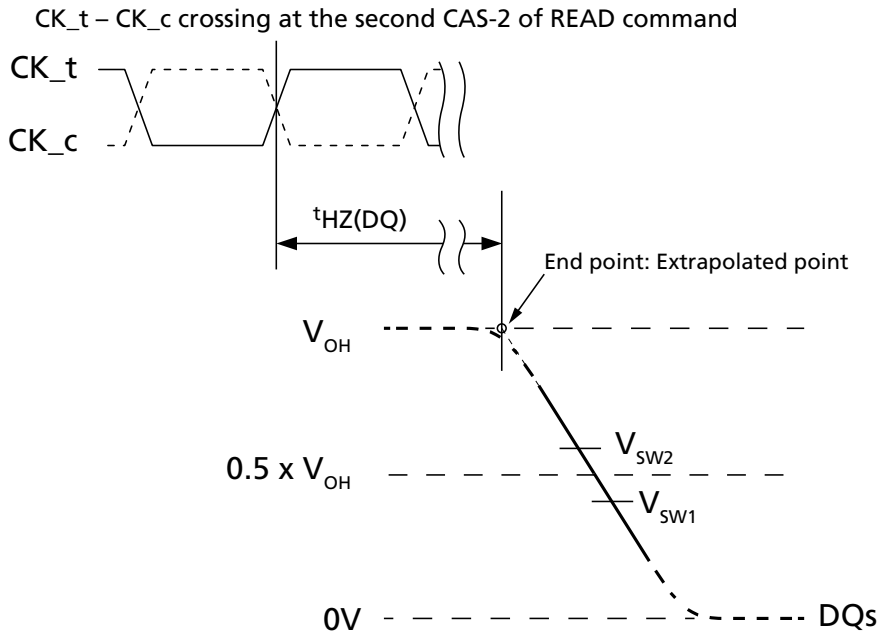

Notes:
1. Conditions for calibration: Pull down driver R_{ON} = 40 ohms, V_{OH} = V_{DDQ}/3.

Micron Technology, Inc. reserves the right to change products or specifications without notice.
© 2017 Micron Technology, Inc. All rights reserved.

2. Termination condition for DQ and DMI = 50 ohms to V_{SSQ}.
3. The V_{OH} level depends on MR22 OP[2:0] and MR3 OP[0] settings as well as device tolerances. Use the actual V_{OH} value for ^{t}HZ and ^{t}LZ measurements.

Table 219: Reference Voltage for ^{t}LZ(DQ), ^{t}HZ(DQ) Timing Measurements

Measured Parameter	Measured Parameter Symbol	Vsw1	Vsw2	Unit
DQ Low-Z time from CK_t, CK_c	^{t}LZ(DQ)	0.4 × V_{OH}	0.6 × V_{OH}	V
DQ High-Z time from CK_t, CK_c	^{t}HZ(DQ)	0.4 × V_{OH}	0.6 × V_{OH}	

Micron Technology, Inc. reserves the right to change products or specifications without notice.
© 2017 Micron Technology, Inc. All rights reserved.

V_{REF} Specifications - LPDDR4

Internal $V_{REF(CA)}$ Specifications

The device's internal $V_{REF(CA)}$ specification parameters are operating voltage range, step size, V_{REF} step time, V_{REF} full-range step time, and V_{REF} valid level.

The voltage operating range specifies the minimum required V_{REF} setting range for LPDDR4 devices. The minimum range is defined by $V_{REF,max}$ and $V_{REF,min}$.

Table 220: Internal $V_{REF(CA)}$ Specifications

Symbol	Parameter	Min	Typ	Max	Unit	Notes
$V_{REF(CA),max_r0}$	$V_{REF(CA)}$ range-0 MAX operating point	–	–	30%	V_{DD2}	1, 11
$V_{REF(CA),min_r0}$	$V_{REF(CA)}$ range-0 MIN operating point	10%	–	–	V_{DD2}	1, 11
$V_{REF(CA),max_r1}$	$V_{REF(CA)}$ range-1 MAX operating point	–	–	42%	V_{DD2}	1, 11
$V_{REF(CA),min_r1}$	$V_{REF(CA)}$ range-1 MIN operating point	22%	–	–	V_{DD2}	1, 11
$V_{REF(CA),step}$	$V_{REF(CA)}$ step size	0.30%	0.40%	0.50%	V_{DD2}	2
$V_{REF(CA),set_tol}$	$V_{REF(CA)}$ set tolerance	–1.00%	0.00%	1.00%	V_{DD2}	3, 4, 6
		–0.10%	0.00%	0.10%	V_{DD2}	3, 5, 7
$^{t}V_{REF}$_TIME-SHORT	$V_{REF(CA)}$ step time	–	–	100	ns	8
$^{t}V_{REF}$_TIME-MIDDLE		–	–	200	ns	12
$^{t}V_{REF}$_TIME-LONG		–	–	250	ns	9
$^{t}V_{REF_time_weak}$		–	–	1	ms	13, 14
$V_{REF(CA)_val_tol}$	$V_{REF(CA)}$ valid tolerance	–0.10%	0.00%	0.10%	V_{DD2}	10

Notes:
1. $V_{REF(CA)}$ DC voltage referenced to $V_{DD2(DC)}$.
2. $V_{REF(CA)}$ step size increment/decrement range. $V_{REF(CA)}$ at DC level.
3. $V_{REF(CA),new} = V_{REF(CA),old} + n \times V_{REF(CA),step}$; n = number of steps; if increment, use "+"; if decrement, use "–".
4. The minimum value of $V_{REF(CA)}$ setting tolerance = $V_{REF(CA),new}$ - 1.0% × V_{DD2}. The maximum value of $V_{REF(CA)}$ setting tolerance = $V_{REF(CA),new}$ + 1.0% × V_{DD2}. For n > 4.
5. The minimum value of $V_{REF(CA)}$ setting tolerance = $V_{REF(CA),new}$ - 0.10% × V_{DD2}. The maximum value of $V_{REF(CA)}$ setting tolerance = $V_{REF(CA),new}$ + 0.10% × V_{DD2}. For n < 4.
6. Measured by recording the minimum and maximum values of the $V_{REF(CA)}$ output over the range, drawing a straight line between those points and comparing all other $V_{REF(CA)}$ output settings to that line.
7. Measured by recording the minimum and maximum values of the $V_{REF(CA)}$ output across four consecutive steps (n = 4), drawing a straight line between those points and comparing all other $V_{REF(CA)}$ output settings to that line.
8. Time from MRW command to increment or decrement one step size for $V_{REF(CA)}$.
9. Time from MRW command to increment or decrement $V_{REF,min}$ to $V_{REF,max}$ or $V_{REF,max}$ to $V_{REF,min}$ change across the $V_{REF(CA)}$ range in V_{REF} voltage.
10. Only applicable for DRAM component level test/characterization purposes. Not applicable for normal mode of operation. V_{REF} valid is to qualify the step times which will be characterized at the component level.

Micron Technology, Inc. reserves the right to change products or specifications without notice.
© 2017 Micron Technology, Inc. All rights reserved.

11. DRAM range-0 or range-1 set by MR12 OP[6].
12. Time from MRW command to increment or decrement more than one step size up to a full range of V_{REF} voltage within the same $V_{REF(CA)}$ range.
13. Applies when VRCG high current mode is not enabled, specified by MR13 [OP3] = 0b.
14. $^{t}V_{REF}$_time_weak covers all $V_{REF(CA)}$ range and value change conditions are applied to $^{t}V_{REF}$_TIME-SHORT/MIDDLE/LONG.

Internal $V_{REF(DQ)}$ Specifications

The device's internal $V_{REF(DQ)}$ specification parameters are operating voltage range, step size, V_{REF} step tolerance, V_{REF} step time and V_{REF} valid level.

The voltage operating range specifies the minimum required V_{REF} setting range for LPDDR4 devices. The minimum range is defined by $V_{REF,max}$ and $V_{REF,min}$.

Table 221: Internal $V_{REF(DQ)}$ Specifications

Symbol	Parameter	Min	Typ	Max	Unit	Notes
$V_{REF(DQ),max_r0}$	V_{REF} MAX operating point Range-0	–	–	30%	V_{DDQ}	1, 11
$V_{REF(DQ),min_r0}$	V_{REF} MIN operating point Range-0	10%	–	–	V_{DDQ}	1, 11
$V_{REF(DQ),max_r1}$	V_{REF} MAX operating point Range-1	–	–	42%	V_{DDQ}	1, 11
$V_{REF(DQ),min_r1}$	V_{REF} MIN operating point Range-1	22%	–	–	V_{DDQ}	1, 11
$V_{REF(DQ),step}$	$V_{REF(DQ)}$ step size	0.30%	0.40%	0.50%	V_{DDQ}	2
$V_{REF(DQ),set_tol}$	$V_{REF(DQ)}$ set tolerance	–1.00%	0.00%	1.00%	V_{DDQ}	3, 4, 6
		–0.10%	0.00%	0.10%	V_{DDQ}	3, 5, 7
$^{t}V_{REF}$_TIME-SHORT	$V_{REF(DQ)}$ step time	–	–	100	ns	8
$^{t}V_{REF}$_TIME-MIDDLE		–	–	200	ns	12
$^{t}V_{REF}$_TIME-LONG		–	–	250	ns	9
$^{t}V_{REF_time_weak}$		–	–	1	ms	13, 14
$V_{REF(DQ),val_tol}$	$V_{REF(DQ)}$ valid tolerance	–0.10%	0.00%	0.10%	V_{DDQ}	10

Notes:
1. $V_{REF(DQ)}$ DC voltage referenced to $V_{DDQ(DC)}$.
2. $V_{REF(DQ)}$ step size increment/decrement range. $V_{REF(DQ)}$ at DC level.
3. $V_{REF(DQ),new} = V_{REF(DQ),old} + n \times V_{REF(DQ),step}$; n = number of steps; if increment, use "+"; if decrement, use "–".
4. The minimum value of $V_{REF(DQ)}$ setting tolerance = $V_{REF(DQ),new}$ - 1.0% × V_{DDQ}. The maximum value of $V_{REF(DQ)}$ setting tolerance = $V_{REF(DQ),new}$ + 1.0% × V_{DDQ}. For n > 4.
5. The minimum value of $V_{REF(DQ)}$setting tolerance = $V_{REF(DQ),new}$ - 0.10% × V_{DDQ}. The maximum value of $V_{REF(DQ)}$ setting tolerance = $V_{REF(DQ),new}$ + 0.10% × V_{DDQ}. For n < 4.
6. Measured by recording the minimum and maximum values of the $V_{REF(DQ)}$ output over the range, drawing a straight line between those points and comparing all other $V_{REF(DQ)}$ output settings to that line.
7. Measured by recording the minimum and maximum values of the $V_{REF(DQ)}$ output across four consecutive steps (n = 4), drawing a straight line between those points and comparing all other $V_{REF(DQ)}$ output settings to that line.
8. Time from MRW command to increment or decrement one step size for $V_{REF(DQ)}$.

Micron Technology, Inc. reserves the right to change products or specifications without notice.
© 2017 Micron Technology, Inc. All rights reserved.

9. Time from MRW command to increment or decrement $V_{REF,min}$ to $V_{REF,max}$ or $V_{REF,max}$ to $V_{REF,min}$ change across the $V_{REF(DQ)}$ Range in $V_{REF(DQ)}$ Voltage.
10. Only applicable for DRAM component level test/characterization purposes. Not applicable for normal mode of operation. V_{REF} valid is to qualify the step times which will be characterized at the component level.
11. DRAM range-0 or range-1 set by MR14 OP[6].
12. Time from MRW command to increment or decrement more than one step size up to a full range of V_{REF} voltage within the same $V_{REF(DQ)}$ range.
13. Applies when VRCG high current mode is not enabled, specified by MR13 [OP3] = 0.
14. $^{t}V_{REF_time_weak}$ covers all $V_{REF(DQ)}$ Range and Value change conditions are applied to $^{t}V_{REF_}$TIME-SHOR/MIDDLE/LONG.

Micron Technology, Inc. reserves the right to change products or specifications without notice.
© 2017 Micron Technology, Inc. All rights reserved.

Command Definitions and Timing Diagrams - LPDDR4

Pull Up/Pull Down Driver Characteristics and Calibration

Table 222: Pull-Down Driver Characteristics – ZQ Calibration

R_{ONPD},nom	Register	Min	Nom	Max	Unit
40 ohms	R_{ON40PD}	0.90	1.0	1.10	$R_{ZQ}/6$
48 ohms	R_{ON48PD}	0.90	1.0	1.10	$R_{ZQ}/5$
60 ohms	R_{ON60PD}	0.90	1.0	1.10	$R_{ZQ}/4$
80 ohms	R_{ON80PD}	0.90	1.0	1.10	$R_{ZQ}/3$
120 ohms	$R_{ON120PD}$	0.90	1.0	1.10	$R_{ZQ}/2$
240 ohms	$R_{ON240PD}$	0.90	1.0	1.10	$R_{ZQ}/1$

Note: 1. All value are after ZQ calibration. Without ZQ calibration, R_{ONPD} values are ±30%.

Table 223: Pull-Up Characteristics – ZQ Calibration

V_{OHPU},nom	V_{OH},nom	Min	Nom	Max	Unit
$V_{DDQ}/2.5$	440	0.90	1.0	1.10	V_{OH},nom
$V_{DDQ}/3$	367	0.90	1.0	1.10	V_{OH},nom

Notes: 1. All value are after ZQ calibration. Without ZQ calibration, R_{ONPD} values are ±30%.
2. V_{OH},nom (mV) values are based on a nominal V_{DDQ} = 1.1V.

Table 224: Terminated Valid Calibration Points

V_{OHPU}	ODT Value					
	240	120	80	60	48	40
$V_{DDQ}/2.5$	Valid	Valid	Valid	DNU	DNU	DNU
$V_{DDQ}/3$	Valid	Valid	Valid	Valid	Valid	Valid

Notes: 1. Once the output is calibrated for a given $V_{OH(nom)}$ calibration point, the ODT value may be changed without recalibration.
2. If the $V_{OH(nom)}$ calibration point is changed, then recalibration is required.
3. DNU = Do not use.

On-Die Termination for the Command/Address Bus

The on-die termination (ODT) feature allows the device to turn on/off termination resistance for CK_t, CK_c, CS, and CA[5:0] signals without the ODT control pin. The ODT feature is designed to improve signal integrity of the memory channel by allowing the DRAM controller to turn on and off termination resistance for any target DRAM devices via the mode register setting.

A simple functional representation of the DRAM ODT feature is shown below.

Micron Technology, Inc. reserves the right to change products or specifications without notice.
© 2017 Micron Technology, Inc. All rights reserved.

Figure 181: ODT for CA

$$R_{TT} = \frac{V_{OUT}}{|I_{OUT}|}$$

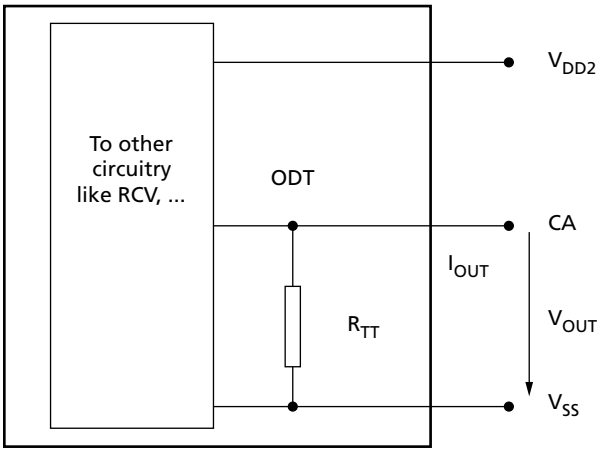

ODT Mode Register and ODT State Table

ODT termination values are set and enabled via MR11. The CA bus (CK_t, CK_c, CS, CA[5:0]) ODT resistance values are set by MR11 OP[6:4]. The default state for the CA is ODT disabled.

ODT is applied on the CA bus to the CK_t, CK_c, CS, and CA signals. The CA ODT of the device is designed to enable one rank to terminate the entire command bus in a multi-rank system, so only one termination load will be present even if multiple devices are sharing the command signals. For this reason, CA ODT remains on, even when the device is in the power-down or self refresh power-down state.

The die has a bond pad (ODT_CA) for multirank operations. When the ODT_CA pad is LOW, the die will not terminate the CA bus regardless of the state of the mode register CA ODT bits (MR11 OP[6:4]). If, however, the ODT_CA bond pad is HIGH and the mode register CA ODT bits are enabled, the die will terminate the CA bus with the ODT values found in MR11 OP[6:4]. In a multirank system, the terminating rank should be trained first, followed by the non-terminating rank(s).

Table 225: Command Bus ODT State

CA ODT MR11[6:4]	ODT_CA Bond Pad	ODTD-CA MR22 OP[5]	ODTE-CK MR22 OP[3]	ODTE-CS MR22 OP[4]	ODT State for CA	ODT State for CK	ODT State for CS
Disabled[1]	Valid[2]	Valid[3]	Valid[3]	Valid[3]	Off	Off	Off
Valid [3]	0	Valid[3]	0	0	Off	Off	Off
Valid [3]	0	Valid[3]	0	1	Off	Off	On
Valid [3]	0	Valid[3]	1	0	Off	On	Off
Valid [3]	0	Valid[3]	1	1	Off	On	On
Valid [3]	1	0	Valid[3]	Valid[3]	On	On	On

Micron Technology, Inc. reserves the right to change products or specifications without notice.
© 2017 Micron Technology, Inc. All rights reserved.

Table 225: Command Bus ODT State (Continued)

CA ODT MR11[6:4]	ODT_CA Bond Pad	ODTD-CA MR22 OP[5]	ODTE-CK MR22 OP[3]	ODTE-CS MR22 OP[4]	ODT State for CA	ODT State for CK	ODT State for CS
Valid [3]	1	1	Valid[3]	Valid[3]	Off	On	On

Notes:
1. Default value.
2. Valid = H or L (a defined logic level)
3. Valid = 0 or 1.
4. The state of ODT_CA is not changed when the device enters power-down mode. This maintains termination for alternate ranks in multirank systems.

ODT Mode Register and ODT Characteristics

Table 226: ODT DC Electrical Characteristics for Command/Address Bus – up to 3200 Mb/s

R_{ZQ} = 240Ω ±1% over entire operating range after calibration

MR11 OP[6:4]	R_{TT}	V_{OUT}	Min	Nom	Max	Unit	Notes
001b	240Ω	$V_{OL(DC)} = 0.1 \times V_{DD2}$	0.8	1.0	1.1	$R_{ZQ}/1$	1, 2
		$V_{OM(DC)} = 0.33 \times V_{DD2}$	0.9	1.0	1.1		
		$V_{OH(DC)} = 0.5 \times V_{DD2}$	0.9	1.0	1.2		
010b	120Ω	$V_{OL(DC)} = 0.1 \times V_{DD2}$	0.8	1.0	1.1	$R_{ZQ}/2$	1, 2
		$V_{OM(DC)} = 0.33 \times V_{DD2}$	0.9	1.0	1.1		
		$V_{OH(DC)} = 0.5 \times V_{DD2}$	0.9	1.0	1.2		
011b	80Ω	$V_{OL(DC)} = 0.1 \times V_{DD2}$	0.8	1.0	1.1	$R_{ZQ}/3$	1, 2
		$V_{OM(DC)} = 0.33 \times V_{DD2}$	0.9	1.0	1.1		
		$V_{OH(DC)} = 0.5 \times V_{DD2}$	0.9	1.0	1.2		
100b	60Ω	$V_{OL(DC)} = 0.1 \times V_{DD2}$	0.8	1.0	1.1	$R_{ZQ}/4$	1, 2
		$V_{OM(DC)} = 0.33 \times V_{DD2}$	0.9	1.0	1.1		
		$V_{OH(DC)} = 0.5 \times V_{DD2}$	0.9	1.0	1.2		
101b	48Ω	$V_{OL(DC)} = 0.1 \times V_{DD2}$	0.8	1.0	1.1	$R_{ZQ}/5$	1, 2
		$V_{OM(DC)} = 0.33 \times V_{DD2}$	0.9	1.0	1.1		
		$V_{OH(DC)} = 0.5 \times V_{DD2}$	0.9	1.0	1.2		
110b	40Ω	$V_{OL(DC)} = 0.1 \times V_{DD2}$	0.8	1.0	1.1	$R_{ZQ}/6$	1, 2
		$V_{OM(DC)} = 0.33 \times V_{DD2}$	0.9	1.0	1.1		
		$V_{OH(DC)} = 0.5 \times V_{DD2}$	0.9	1.0	1.2		
Mismatch, CA -CA within clock group		$0.33 \times V_{DD2}$	–	–	2	%	1, 2, 3

Notes:
1. The tolerance limits are specified after calibration with stable temperature and voltage. To understand the behavior of the tolerance limits when voltage or temperature changes after calibration, see the section on voltage and temperature sensitivity.
2. Pull-down ODT resistors are recommended to be calibrated at $0.33 \times V_{DD2}$. Other calibration points may be required to achieve the linearity specification shown above, for example, calibration at $0.5 \times V_{DD2}$ and $0.1 \times V_{DD2}$.

Micron Technology, Inc. reserves the right to change products or specifications without notice.
© 2017 Micron Technology, Inc. All rights reserved.

3. CA to CA mismatch within clock group variation for a given component including CK_t, CK_c ,and CS (characterized).

$$\text{CA-to-CA mismatch} = \frac{R_{ODT}\,(MAX) - R_{ODT}\,(MIN)}{R_{ODT}\,(AVG)}$$

Table 227: ODT DC Electrical Characteristics for Command/Address Bus – Beyond 3200 Mb/s

R_{ZQ} = 240Ω ±1% over entire operating range after calibration

MR11 OP[6:4]	R_{TT}	V_{OUT}	Min	Nom	Max	Unit	Notes
001b	240Ω	$V_{OL(DC)} = 0.1 \times V_{DD2}$	0.8	1.0	1.1	$R_{ZQ}/1$	1, 2
		$V_{OM(DC)} = 0.33 \times V_{DD2}$	0.9	1.0	1.1		
		$V_{OH(DC)} = 0.5 \times V_{DD2}$	0.9	1.0	1.3		
010b	120Ω	$V_{OL(DC)} = 0.1 \times V_{DD2}$	0.8	1.0	1.1	$R_{ZQ}/2$	1, 2
		$V_{OM(DC)} = 0.33 \times V_{DD2}$	0.9	1.0	1.1		
		$V_{OH(DC)} = 0.5 \times V_{DD2}$	0.9	1.0	1.3		
011b	80Ω	$V_{OL(DC)} = 0.1 \times V_{DD2}$	0.8	1.0	1.1	$R_{ZQ}/3$	1, 2
		$V_{OM(DC)} = 0.33 \times V_{DD2}$	0.9	1.0	1.1		
		$V_{OH(DC)} = 0.5 \times V_{DD2}$	0.9	1.0	1.3		
100b	60Ω	$V_{OL(DC)} = 0.1 \times V_{DD2}$	0.8	1.0	1.1	$R_{ZQ}/4$	1, 2
		$V_{OM(DC)} = 0.33 \times V_{DD2}$	0.9	1.0	1.1		
		$V_{OH(DC)} = 0.5 \times V_{DD2}$	0.9	1.0	1.3		
101b	48Ω	$V_{OL(DC)} = 0.1 \times V_{DD2}$	0.8	1.0	1.1	$R_{ZQ}/5$	1, 2
		$V_{OM(DC)} = 0.33 \times V_{DD2}$	0.9	1.0	1.1		
		$V_{OH(DC)} = 0.5 \times V_{DD2}$	0.9	1.0	1.3		
110b	40Ω	$V_{OL(DC)} = 0.1 \times V_{DD2}$	0.8	1.0	1.1	$R_{ZQ}/6$	1, 2
		$V_{OM(DC)} = 0.33 \times V_{DD2}$	0.9	1.0	1.1		
		$V_{OH(DC)} = 0.5 \times V_{DD2}$	0.9	1.0	1.3		
Mismatch, CA -CA within clock group		$0.33 \times V_{DD2}$	–	–	2	%	1, 2, 3

Notes:
1. The tolerance limits are specified after calibration with stable temperature and voltage. To understand the behavior of the tolerance limits when voltage or temperature changes after calibration, see the section on voltage and temperature sensitivity.
2. Pull-down ODT resistors are recommended to be calibrated at $0.33 \times V_{DD2}$. Other calibration points may be required to achieve the linearity specification shown above, e.g. calibration at $0.5 \times V_{DD2}$ and $0.1 \times V_{DD2}$.
3. CA to CA mismatch within clock group variation for a given component including CK_t, CK_c ,and CS (characterized).

$$\text{CA-to-CA mismatch} = \frac{R_{ODT}\,(MAX) - R_{ODT}\,(MIN)}{R_{ODT}\,(AVG)}$$

DQ On-Die Termination

On-die termination (ODT) is a feature that allows the device to turn on/off termination resistance for each DQ, DQS, and DMI signal without the ODT control pin. The ODT

Micron Technology, Inc. reserves the right to change products or specifications without notice.
© 2017 Micron Technology, Inc. All rights reserved.

feature is designed to improve signal integrity of the memory channel by allowing the DRAM controller to turn on and off termination resistance for any target DRAM devices during WRITE or MASK WRITE operation.

The ODT feature is off and cannot be supported in power-down and self refresh modes.

The switch is enabled by the internal ODT control logic, which uses the WRITE-1 or MASK WRITE-1 command and other mode register control information. The value of R_{TT} is determined by the MR bits.

$$R_{TT} = \frac{V_{OUT}}{|I_{OUT}|}$$

Figure 182: Functional Representation of DQ ODT

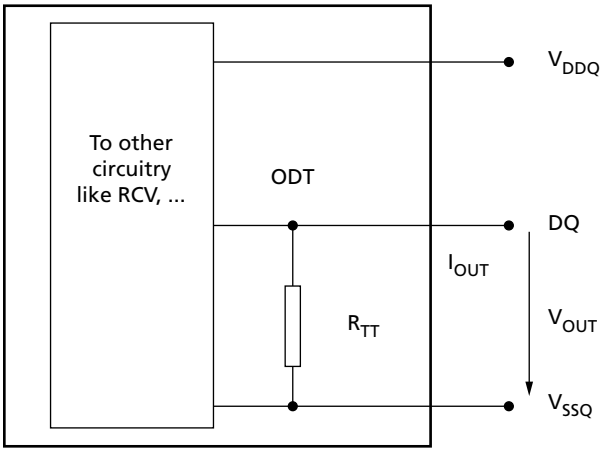

Table 228: ODT DC Electrical Characteristics for DQ Bus– up to 3200 Mb/s

R_{ZQ} = 240Ω ±1% over entire operating range after calibration

MR11 OP[2:0]	R_{TT}	V_{OUT}	Min	Nom	Max	Unit	Notes
001b	240Ω	$V_{OL(DC)} = 0.1 \times V_{DDQ}$	0.8	1.0	1.1	$R_{ZQ}/1$	1, 2
		$V_{OM(DC)} = 0.33 \times V_{DDQ}$	0.9	1.0	1.1		
		$V_{OH(DC)} = 0.5 \times V_{DDQ}$	0.9	1.0	1.2		
010b	120Ω	$V_{OL(DC)} = 0.1 \times V_{DDQ}$	0.8	1.0	1.1	$R_{ZQ}/2$	1, 2
		$V_{OM(DC)} = 0.33 \times V_{DDQ}$	0.9	1.0	1.1		
		$V_{OH(DC)} = 0.5 \times V_{DDQ}$	0.9	1.0	1.2		
011b	80Ω	$V_{OL(DC)} = 0.1 \times V_{DDQ}$	0.8	1.0	1.1	$R_{ZQ}/3$	1, 2
		$V_{OM(DC)} = 0.33 \times V_{DDQ}$	0.9	1.0	1.1		
		$V_{OH(DC)} = 0.5 \times V_{DDQ}$	0.9	1.0	1.2		
100b	60Ω	$V_{OL(DC)} = 0.1 \times V_{DDQ}$	0.8	1.0	1.1	$R_{ZQ}/4$	1, 2
		$V_{OM(DC)} = 0.33 \times V_{DDQ}$	0.9	1.0	1.1		
		$V_{OH(DC)} = 0.5 \times V_{DDQ}$	0.9	1.0	1.2		

Micron Technology, Inc. reserves the right to change products or specifications without notice.
© 2017 Micron Technology, Inc. All rights reserved.

Table 228: ODT DC Electrical Characteristics for DQ Bus– up to 3200 Mb/s (Continued)

R_{ZQ} = 240Ω ±1% over entire operating range after calibration

MR11 OP[2:0]	R_{TT}	V_{OUT}	Min	Nom	Max	Unit	Notes
101b	48Ω	$V_{OL(DC)}$ = 0.1 × V_{DDQ}	0.8	1.0	1.1	R_{ZQ}/5	1, 2
		$V_{OM(DC)}$ = 0.33 × V_{DDQ}	0.9	1.0	1.1		
		$V_{OH(DC)}$ = 0.5 × V_{DDQ}	0.9	1.0	1.2		
110b	40Ω	$V_{OL(DC)}$ = 0.1 × V_{DDQ}	0.8	1.0	1.1	R_{ZQ}/6	1, 2
		$V_{OM(DC)}$ = 0.33 × V_{DDQ}	0.9	1.0	1.1		
		$V_{OH(DC)}$ = 0.5 × V_{DDQ}	0.9	1.0	1.2		
Mismatch error, DQ-to-DQ within a channel		0.33 × V_{DDQ}	–	–	2	%	1, 2, 3

Notes:
1. The ODT tolerance limits are specified after calibration with stable temperature and voltage. To understand the behavior of the tolerance limits when voltage or temperature changes after calibration, see the following section on voltage and temperature sensitivity.
2. Pull-down ODT resistors are recommended to be calibrated at 0.33 × V_{DDQ}. Other calibration points may be required to achieve the linearity specification shown above, (for example, calibration at 0.5 × V_{DDQ} and –0.1 × V_{DDQ}.
3. DQ-to-DQ mismatch within byte variation for a given component, including DQS (characterized).

$$\text{DQ-to-DQ mismatch} = \frac{R_{ODT}\,(MAX) - R_{ODT}\,(MIN)}{R_{ODT}\,(AVG)}$$

Table 229: ODT DC Electrical Characteristics for DQ Bus – Beyond 3200 Mb/s

R_{ZQ} = 240Ω ±1% over entire operating range after calibration

MR11 OP[2:0]	R_{TT}	V_{OUT}	Min	Nom	Max	Unit	Notes
001b	240Ω	$V_{OL(DC)}$ = 0.1 × V_{DDQ}	0.8	1.0	1.1	R_{ZQ}/1	1, 2
		$V_{OM(DC)}$ = 0.33 × V_{DDQ}	0.9	1.0	1.1		
		$V_{OH(DC)}$ = 0.5 × V_{DDQ}	0.9	1.0	1.3		
010b	120Ω	$V_{OL(DC)}$ = 0.1 × V_{DDQ}	0.8	1.0	1.1	R_{ZQ}/2	1, 2
		$V_{OM(DC)}$ = 0.33 × V_{DDQ}	0.9	1.0	1.1		
		$V_{OH(DC)}$ = 0.5 × V_{DDQ}	0.9	1.0	1.3		
011b	80Ω	$V_{OL(DC)}$ = 0.1 × V_{DDQ}	0.8	1.0	1.1	R_{ZQ}/3	1, 2
		$V_{OM(DC)}$ = 0.33 × V_{DDQ}	0.9	1.0	1.1		
		$V_{OH(DC)}$ = 0.5 × V_{DDQ}	0.9	1.0	1.3		
100b	60Ω	$V_{OL(DC)}$ = 0.1 × V_{DDQ}	0.8	1.0	1.1	R_{ZQ}/4	1, 2
		$V_{OM(DC)}$ = 0.33 × V_{DDQ}	0.9	1.0	1.1		
		$V_{OH(DC)}$ = 0.5 × V_{DDQ}	0.9	1.0	1.3		
101b	48Ω	$V_{OL(DC)}$ = 0.1 × V_{DDQ}	0.8	1.0	1.1	R_{ZQ}/5	1, 2
		$V_{OM(DC)}$ = 0.33 × V_{DDQ}	0.9	1.0	1.1		
		$V_{OH(DC)}$ = 0.5 × V_{DDQ}	0.9	1.0	1.3		

Micron Technology, Inc. reserves the right to change products or specifications without notice.
© 2017 Micron Technology, Inc. All rights reserved.

Table 229: ODT DC Electrical Characteristics for DQ Bus – Beyond 3200 Mb/s (Continued)

R_{ZQ} = 240Ω ±1% over entire operating range after calibration

MR11 OP[2:0]	R_{TT}	V_{OUT}	Min	Nom	Max	Unit	Notes
110b	40Ω	$V_{OL(DC)}$ = 0.1 × V_{DDQ}	0.8	1.0	1.1	R_{ZQ}/6	1, 2
		$V_{OM(DC)}$ = 0.33 × V_{DDQ}	0.9	1.0	1.1		
		$V_{OH(DC)}$ = 0.5 × V_{DDQ}	0.9	1.0	1.3		
Mismatch error, DQ-to-DQ within a channel		0.33 × V_{DDQ}	–	–	2	%	1, 2, 3

Notes:
1. The ODT tolerance limits are specified after calibration with stable temperature and voltage. To understand the behavior of the tolerance limits when voltage or temperature changes after calibration, see the following section on voltage and temperature sensitivity.
2. Pull-down ODT resistors are recommended to be calibrated at 0.33 × V_{DDQ}. Other calibration points may be required to achieve the linearity specification shown above, for example, calibration at 0.5 × V_{DDQ} and –0.1 × V_{DDQ}.
3. DQ-to-DQ mismatch within byte variation for a given component, including DQS (characterized).

$$\text{DQ-to-DQ mismatch} = \frac{R_{ODT}\,(MAX) - R_{ODT}\,(MIN)}{R_{ODT}\,(AVG)}$$

Output Driver and Termination Register Temperature and Voltage Sensitivity

When temperature and/or voltage change after calibration, the tolerance limits are widen according to the tables below.

Table 230: Output Driver and Termination Register Sensitivity Definition

Resistor	Definition Point	Min	Max	Unit	Notes
R_{ONPD}	0.33 × V_{DDQ}	90 - (dR_{ONdT} · |ΔT|) - (dR_{ONdV} · |ΔV|)	110 + (dR_{ONdT} · |ΔT|) + (dR_{ONdV} · |ΔV|)	%	1, 2
V_{OHPU}	0.33 × V_{DDQ}	90 - (dV_{OHdT} · |ΔT|) - (dV_{OHdV} · |ΔV|)	110 + (dV_{OHdT} · |ΔT|) + (dV_{OHdV} · |ΔV|)		1, 2, 5
$R_{TT(I/O)}$	0.33 × V_{DDQ}	90 - (dR_{ONdT} · |ΔT|) - (dR_{ONdV} · |ΔV|)	110 + (dR_{ONdT} · |ΔT|) + (dR_{ONdV} · |ΔV|)		1, 2, 3
$R_{TT(IN)}$	0.33 × V_{DD2}	90 - (dR_{ONdT} · |ΔT|) - (dR_{ONdV}· |ΔV|)	110 + (dR_{ONdT} · |ΔT|) + (dR_{ONdV} · |ΔV|)		1, 2, 4

Notes:
1. ΔT = T - T(@calibration), ΔV = V - V(@calibration)
2. dR_{ONdT}, dR_{ONdV}, dV_{OHdT}, dV_{OHdV}, dR_{TTdV}, and dR_{TTdT} are not subject to production test but are verified by design and characterization.
3. This parameter applies to input/output pin such as DQS, DQ, and DMI.
4. This parameter applies to input pin such as CK, CA, and CS.
5. Refer to Pull-up/Pull-down Driver Characteristics for V_{OHPU}.

Table 231: Output Driver and Termination Register Temperature and Voltage Sensitivity

Symbol	Parameter	Min	Max	Unit
dR_{ONdT}	R_{ON} temperature sensitivity	0	0.75	%/°C
dR_{ONdV}	R_{ON} voltage sensitivity	0	0.20	%/mV

Micron Technology, Inc. reserves the right to change products or specifications without notice.
© 2017 Micron Technology, Inc. All rights reserved.

Table 231: Output Driver and Termination Register Temperature and Voltage Sensitivity (Continued)

Symbol	Parameter	Min	Max	Unit
dV_{OHdT}	V_{OH} temperature sensitivity	0	0.75	%/°C
dV_{OHdV}	V_{OH} voltage sensitivity	0	0.35	%/mV
dR_{TTdT}	R_{TT} temperature sensitivity	0	0.75	%/°C
dR_{TTdV}	R_{TT} voltage sensitivity	0	0.20	%/mV

AC and DC Operating Conditions - LPDDR4

Recommended DC Operating Conditions

Operation or timing that is not specified is illegal. To ensure proper operation, the device must be initialized properly.

Table 232: Recommended DC Operating Conditions

Symbol	Min	Typ	Max	DRAM	Unit	Notes
V_{DD1}	1.7	1.8	1.95	Core 1 power	V	1, 2
V_{DD2}	1.06	1.1	1.17	Core 2 power/Input buffer power	V	1, 2, 3
V_{DDQ}	1.06	1.1	1.17	I/O buffer power	V	2, 3

Notes:
1. V_{DD1} uses significantly less power than V_{DD2}.
2. The voltage range is for DC voltage only. DC voltage is the voltage supplied at the DRAM and is inclusive of all noise up to 20 MHz at the DRAM package ball.
3. The voltage noise tolerance from DC to 20 MHz exceeding a peak-to-peak tolerance of 45mV at the DRAM ball is not included in the TdIVW.

Output Slew Rate and Overshoot/Undershoot specifications - LPDDR4

Single-Ended Output Slew Rate

Table 233: Single-Ended Output Slew Rate

Note 1-5 applies to entire table

Parameter	Symbol	Value		Units
		Min	Max	
Single-ended output slew rate ($V_{OH} = V_{DDQ}/3$)	SRQse	3.5	9.0	V/ns
Output slew rate matching ratio (rise to fall)	–	0.8	1.2	–

Notes:
1. SR = Slew rate; Q = Query output; se = Single-ended signal
2. Measured with output reference load.
3. The ratio of pull-up to pull-down slew rate is specified for the same temperature and voltage, over the entire temperature and voltage range. For a given output, it represents the maximum difference between pull-up and pull-down drivers due to process variation.
4. The output slew rate for falling and rising edges is defined and measured between $V_{OL(AC)} = 0.2 \times V_{OH(DC)}$ and $V_{OH(AC)} = 0.8 \times V_{OH(DC)}$.

Micron Technology, Inc. reserves the right to change products or specifications without notice.
© 2017 Micron Technology, Inc. All rights reserved.

5. Slew rates are measured under average SSO conditions with 50% of the DQ signals per data byte switching.

Figure 183: Single-Ended Output Slew Rate Definition

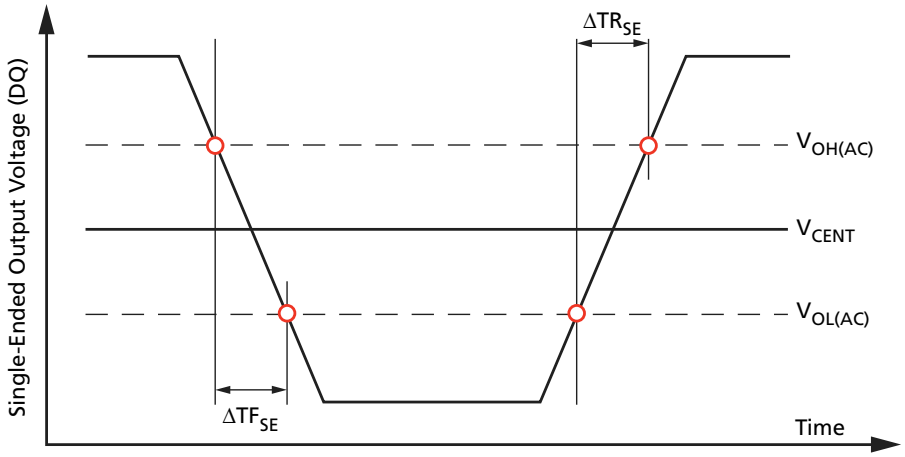

Differential Output Slew Rate

Table 234: Differential Output Slew Rate

Note 1-4 applies to entire table

Parameter	Symbol	Value		Units
		Min	Max	
Differential output slew rate ($V_{OH} = V_{DDQ}/3$)	SRQdiff	7	18	V/ns

Notes:
1. SR = Slew rate; Q = Query output; se = Differential signal
2. Measured with output reference load.
3. The output slew rate for falling and rising edges is defined and measured between $V_{OL(AC)} = -0.8 \times V_{OH(DC)}$ and $V_{OH(AC)} = 0.8 \times V_{OH(DC)}$.
4. Slew rates are measured under average SSO conditions with 50% of the DQ signals per data byte switching.

Micron Technology, Inc. reserves the right to change products or specifications without notice.
© 2017 Micron Technology, Inc. All rights reserved.

Figure 184: Differential Output Slew Rate Definition

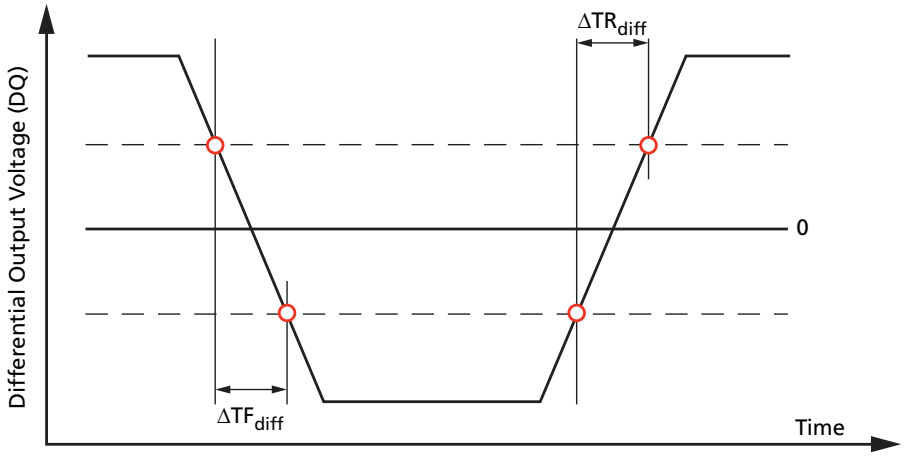

LVSTL I/O System - LPDDR4

LVSTL I/O cells are comprised of a driver pull-up and pull-down and a terminator.

Figure 185: LVSTL I/O Cell

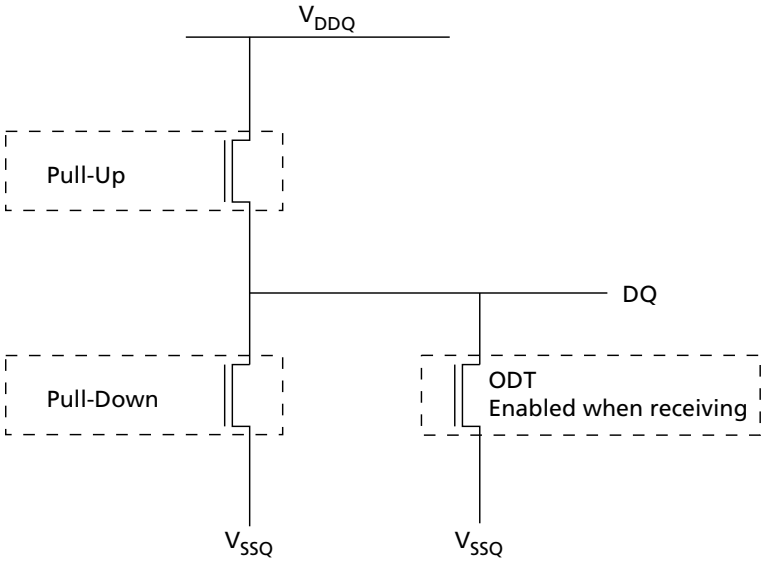

To ensure that the target impedance is achieved, calibrate the LVSTL I/O cell as following example:

1. Calibrate the pull-down device against a 240 ohm resistor to V_{DDQ} via the ZQ pin.

- Set strength control to minimum setting
- Increase drive strength until comparator detects data bit is less than $V_{DDQ}/3$
- NMOS pull-down device is calibrated to 120 ohms

2. Calibrate the pull-up device against the calibrated pull-down device.

Micron Technology, Inc. reserves the right to change products or specifications without notice.
© 2017 Micron Technology, Inc. All rights reserved.

- Set V_{OH} target and NMOS controller ODT replica via MRS (V_{OH} can be automatically controlled by ODT MRS)
- Set strength control to minimum setting
- Increase drive strength until comparator detects data bit is greater than V_{OH} target
- NMOS pull-up device is calibrated to V_{OH} target

Figure 186: Pull-Up Calibration

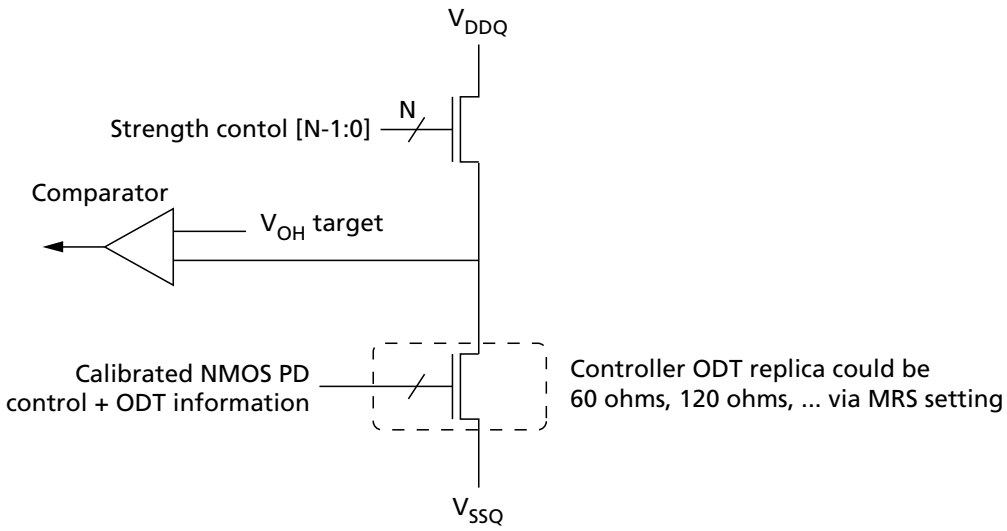

Micron Technology, Inc. reserves the right to change products or specifications without notice.
© 2017 Micron Technology, Inc. All rights reserved.

Revision History

Rev. C – 4/19

- Updated legal status of AUT to Production
- Updated legal status of SDP (MT53E256M16D1) to Production
- Added a reference to Automotive Qualification AEC-Q100 in Features

Rev. B – 5/18

- Updated legal status of AIT/AAT to Production
- Updated I_{DD} Specifications
- Added x16 I/O SDP Package

Rev. A – 11/17

- Initial release of preliminary datasheet with unified product for both LPDDR4/LPDDR4X and one MPN
- Part Number Chart: New Operating Voltage "E" = 1.10V V_{DD2}/0.60V or 1.10V V_{DDQ}
- Included LPDDR4 and LPDDR4X I_{DD} Specifications
- Based on JESD209-4B, JESD209-4-1

8000 S. Federal Way, P.O. Box 6, Boise, ID 83707-0006, Tel: 208-368-4000
www.micron.com/products/support Sales inquiries: 800-932-4992
Micron and the Micron logo are trademarks of Micron Technology, Inc.
All other trademarks are the property of their respective owners.
This data sheet contains minimum and maximum limits specified over the power supply and temperature range set forth herein. Although considered final, these specifications are subject to change, as further product development and data characterization sometimes occur.

Micron Technology, Inc. reserves the right to change products or specifications without notice.
© 2017 Micron Technology, Inc. All rights reserved.