THIS DRAWING IS UNPUBLISHED. RELEASED FOR PUBLICATION 2006
© COPYRIGHT 2006 Tyco Electronics AMP GmbH ALL RIGHTS RESERVED.

LOC	DIST
A1	–

REVISIONS

P	LTR	DESCRIPTION	DATE	DWN	APVD
	B2	ECR-16-015318	19SEP2017	GR	MKO
	B3	ECR-16-016768	15NOV2017	GR	MKO
	B4	ECR-17-013084	29MAR2018	SG	MKO
	B5	REVISED PER ECR-24-207461	07JUN2024	RK	WR

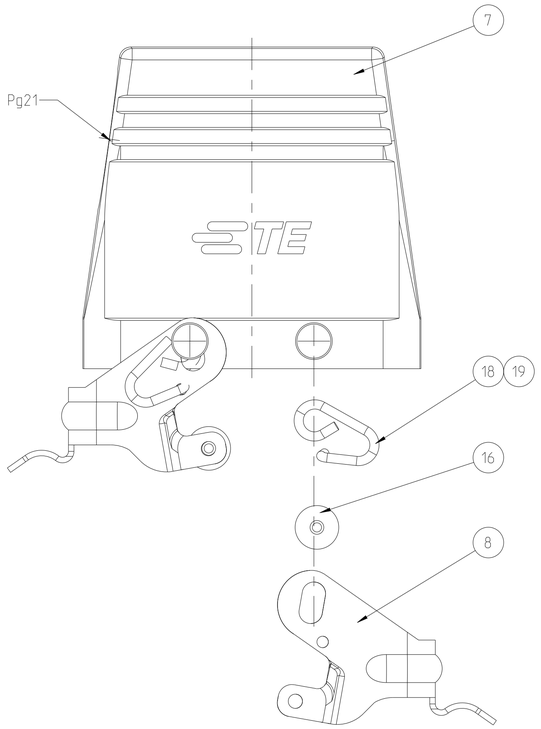

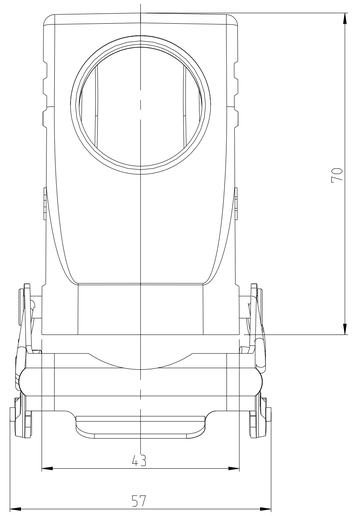

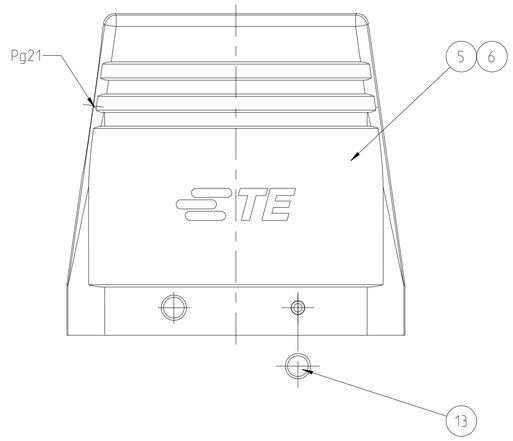

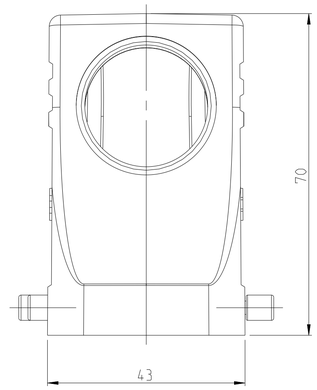

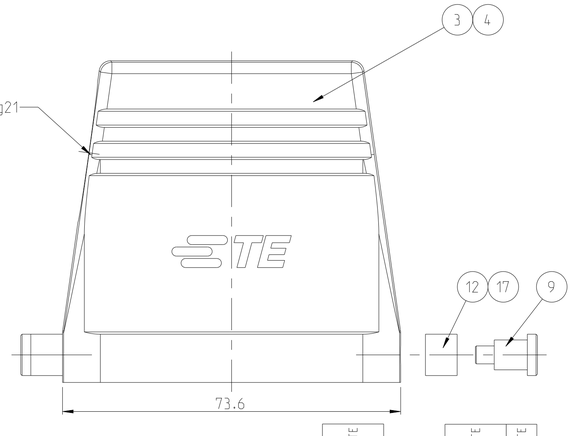

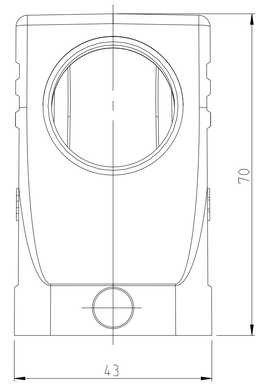

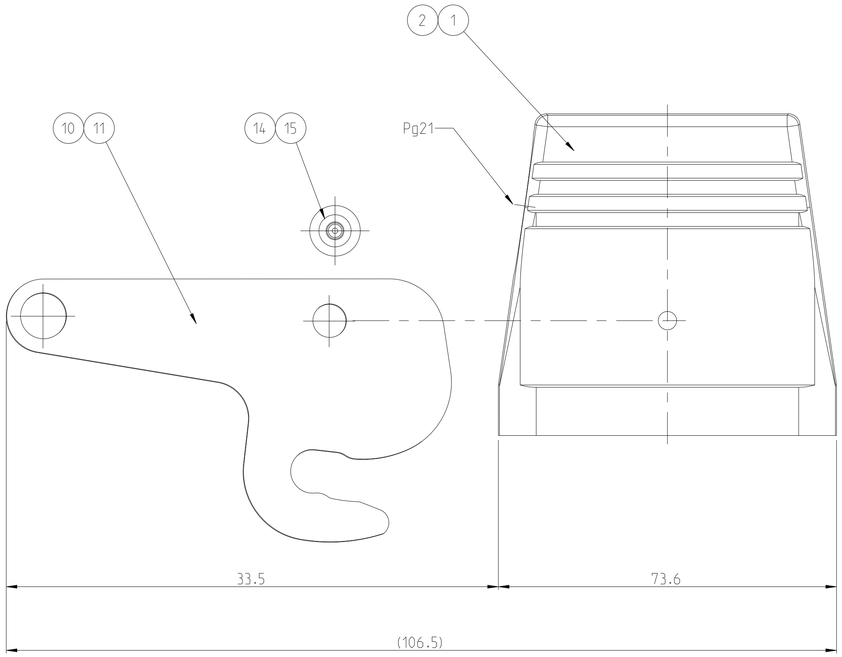

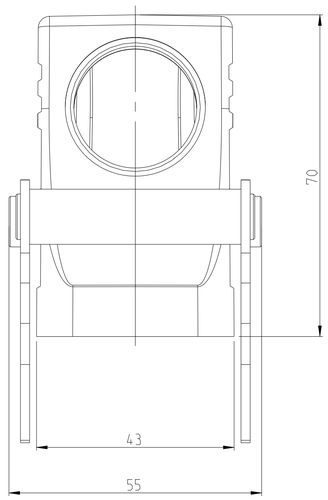

OBSOLETE				OBSOLETE		OBSOLETE					
2								BÜGELFEDER LINKS	FEDERSTAHLDRAHT	VERZINKT		19
2								BÜGELFEDER RECHTS	FEDERSTAHLDRAHT	VERZINKT		18
				2				GLEITROLLE	STAHL	VERZINKT	BLUE	17
4								BÜGELHALTER	STAHL	VERZINKT	BLUE	16
					2			BÜGELHALTER ZENTRALBÜGEL	V2A			15
							2	BÜGELHALTER ZENTRALBÜGEL	STAHL	VERZINKT	BLUE	14
	4							BÜGELBOLZEN	V2A			13
			2					BÜGELBOLZEN	V2A			12
					1			ZENTRAL-BÜGEL	V2A			11
							1	ZENTRAL-BÜGEL	STAHL	VERZINKT	BLUE	10
				2				LB-BÜGEL	STAHL	VERZINKT	BLUE	9
2								VS-BÜGEL	STAHL	VERZINKT	BLUE	8
1								HOOD HD.24	ALUMINIUM/ALU		GREY	7
	1							HOOD HD.24	ALUMINIUM/ALU	ALUMINIUM OXID	BLACK	6
		1						HOOD HD.24	ALUMINIUM/ALU		GREY	5
			1					HOOD HD.24	ALUMINIUM/ALU	ALUMINIUM OXID	BLACK	4
				1				HOOD HD.24	ALUMINIUM/ALU		GREY	3
					1			HOOD HD.24	ALUMINIUM/ALU	ALUMINIUM OXID	BLACK	2
							1	HOOD HD.24	ALUMINIUM/ALU		GREY	1
1-1	2-6	1-6	2-7	1-7	2-3	1-3		DESCRIPTION	MATERIAL	SURFACE	COLOR	ITEM

HD-Z.24.STS-ZB.1.21.G
~~HD-K/Z.24.STS-ZB.1.21.G~~
~~HD.24.STS-GR.1.21.G~~
HD-K.24.STS-GR.1.21.G
HD.24.STS.1.21.G
~~HD-K.24.STS.1.21.G~~
~~HD.24.STS-VS.1.21.G~~

THIS DRAWING IS A CONTROLLED DOCUMENT.

DIMENSIONS: mm

TOLERANCES UNLESS OTHERWISE SPECIFIED:
0 PLC ±
1 PLC ±
2 PLC ±
3 PLC ±
4 PLC ±
ANGLES ±1°

MATERIAL – –
FINISH – –

DWN R.SCHNEIDER 04JUL2011
CHK T.SCHNURPFEIL 04JUL2011
APVD –
PRODUCT SPEC –
APPLICATION SPEC –
WEIGHT –

TE Connectivity

NAME Hood HD.24 ASSY HD.24.STS.1.21.G –

SIZE A1 | CAGE CODE 00779 | DRAWING NO C-1102496 | RESTRICTED TO

CUSTOMER DRAWING | SCALE 5:1 | SHEET 1 OF 1 | REV B5