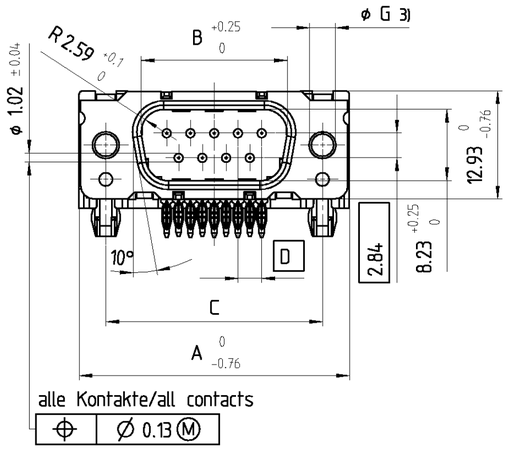

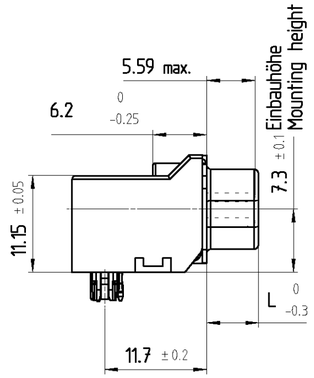

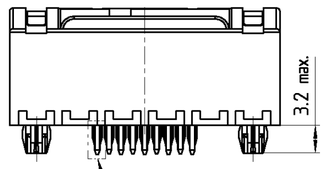

Einzelheit H
Detail H

Einzelheit H (20:1)
Detail H (20:1)

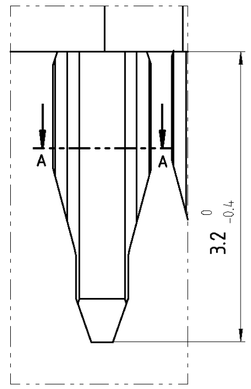

Schnitt AA (20:1)
Section (20:1)

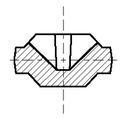

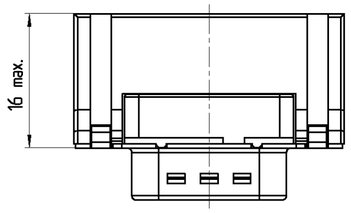

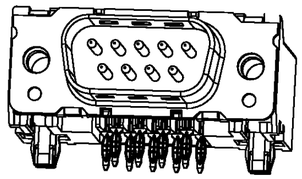

4) Plated-through hole ; incl. plating
suitable for compliant press-in zone
PCB-plating-through : 5...15 µm Sn or SnPb over min. 25 µm Cu
Drilled holes : ϕ1.15 ±0.025 and ϕ3.15 ±0.025
3) torqueretention >= 70 Ncm
2) according to DIN 41611 p.5, DIN IEC 353-5; incl. plating
1) according to DIN 41652 p.2 and p.4

4) Durchmetallisierte Löcher; incl. Oberflächenbehandlung
Geeignet für elastische Einpreßzonen
Metallierung des Loches: 5...15 µm Sn oder SnPb über min. 25 µm Cu
Bohrdurchmesser: ϕ1.15 ±0.025 und ϕ3.15 ±0.025
3) Verdrehsicherheit >= 70 Nm
2) Nach DIN 41611 T.5, DIN IEC 352-5; incl. Oberflächenbehandlung
1) Nach DIN 41652 T.2 und T.4

Sachnr./Ordercode V23529-R1✱✱✱-	Polzahl n Contacts n	Maß/Dimension A	B	C	D	L
C✱09	09	31.19	16.79	25.00 $^{+0.12}_{-0.13}$	2.74	6.12
C✱15	15	39.52	25.12	33.30 $^{+0.15}_{-0.1}$	2.74	6.12
C✱25	25	53.42	38.84	47.04 $^{+0.13}_{-0.13}$	2.76	5.99
C✱37	37	69.70	55.50	63.50 $^{+0.13}_{-0.13}$	2.76	5.99

Anforderungsstufe 1)
preformance level 1)

Sachnr./Ordercode V23529-	Maß/Dimension Ø G
R1✱02-C✱✱✱	M3
R1✱03-C✱✱✱	4-40UNC

1:1

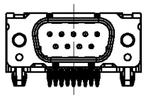

Dargestellt wird die 9-polige Ausführung V23529-R1202-C209
On the drawing : the 9 pole version V23529-R1202-C209

PROPRIETARY THIS INFORMATION IS CONFIDENTIAL AND PROPRIETARY TO TYCO ELECTRONICS CORPORATION AND ITS WORLDWIDE SUBSIDIARIES AND AFFLIATES. IT MAY NOT BE DISCLOSED TO ANYONE, OTHER THAN TYCO ELECTRONICS PERSONEL, WITHOUT WRITTEN AUTHORIZATION FROM TYCO ELECTRONICS CORPORATION, HARRISBURG, PENNSYLVANIA USA.

CHANGES TO THIS DRAWING MUST BE DONE ONLY IN CAD

PAPER SIZE A2

APPLICABLE SPEC.:

FINISH
DIMENSIONS APPLY PLATING

SCALE 2:1; 20:1; 1:1
WEIGHT
MATERIAL

tyco Electronics
Tyco Electronics Corporation
Oostkamp - Belgium
LOC GW
DIMENSIONS IN MM

REV.	CHANGE ORDER	DATE	APP.
A3	SR10-0222-02	21.5.02	KV
A2	SR10-0095-02	13.2.02	KV
A1	SR10-0154-01	13.4.01	KV
A	WO 00/7008	16.6.00	VS
03	W000/2525	25.05.00	KV
02	W097/4510	14.8.97	RST
01		23.1.97	RST
51		7.2.96	RST

DATE 7.2.96
NAME Sterckx
APP. EC CS CI

TOLERANCE UNLESS SPECIFIED OTHERWISE

NAME
Sub-D 90° abgewinkelt Standard Einpreß Stiftleiste
D-Sub 90° angled standard press fit Pin

NO. V23529-R✱✱✱✱-C✱✱✱-✱-7427
SHT. 1 OF 3

CUSTOMER DRAWING No.: C 2-1393481-5

PROPRIETARY: THIS INFORMATION IS CONFIDENTIAL AND PROPRIETARY TO TYCO ELECTRONICS CORPORATION AND ITS WORLDWIDE SUBSIDIARIES AND AFFILIATES. IT MAY NOT BE DISCLOSED TO ANYONE, OTHER THAN TYCO ELECTRONICS PERSONEL, WITHOUT WRITTEN AUTHORIZATION FROM TYCO ELECTRONICS CORPORATION, HARRISBURG, PENNSYLVANIA USA.

Ausführung mit Gewindebolzen
Version with studbolt
V23529-R1*04/R1*05-C***

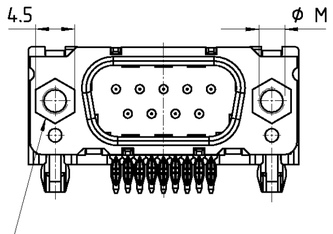

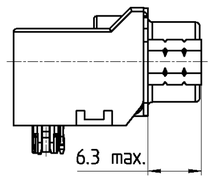

Sachnr./Ordercode V23529-	Maß/Dimension Ø M
R1*04-C***	M3
R1*05-C***	4-40UNC

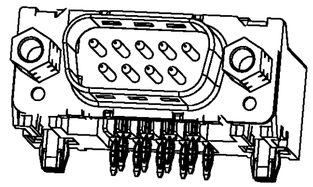

Leiterplattenbohrung (2:1)
PCB hole pattern (2:1)

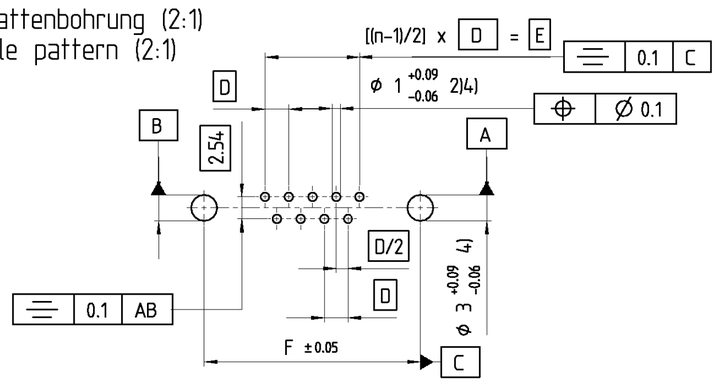

Sachnr./Ordercode V23529-R1***-	Polzahl n Contacts n	Maß/Dimension D	E	F
C*09	09	2.74	10.96	25.00
C*15	15	2.74	19.18	33.30
C*25	25	2.76	33.12	47.04
C*37	37	2.76	49.68	63.50

Anforderungsstufe 1)
performance level 1)

Verpreßhinweis
press-in information

Einpressen über Kunststoff mit:
- 2-Hub-Presse 60kN : 1-1393491-3
- Einpreßmaschine 60/100 kN : 4-1393488-2

Zu verwendenen Werkzeuge :
- Drückstück : 1393490-6
- Amboß : 3-1393489-5

Einstellhöhe : Abstand zwischen LP und angedrucktem Stempel : 11.15 bis 11.3mm

pressing in via the plastic body :
- 2-stroke press 60kN : 1-1393491-3
- press-fit machine 60/100kN : 4-1393488-2

pressing-in tools :
- Compression tool : 1393490-6
- anvil : 3-1393489-5

set-up heights : distance between PCB and compression tool : 11.15 to 11.3 mm

Erlauterungen siehe Seite 1
Remarks see page 1

APPLICABLE SPEC.:

FINISH

DIMENSIONS APPLY PLATING

tyco Electronics

Tyco Electronics Corporation
Oostkamp - Belgium

LOC GW

DIMENSIONS IN MM

SCALE 2:1

WEIGHT

MATERIAL

DATE 7.2.96
NAME Sterckx
DEP. EC CS CI

NAME Sub-D 90° abgewinkelt Standard Einpreß Stiftleiste
D-Sub 90° angeld standard press fit Pin

TOLERANCE UNLESS SPECIFIED OTHERWISE

NO. V23529-R****-C***-*-7427

SHT. 2 OF 3

REV.	CHANGE ORDER	DATE	APP.
A3	see page 1		

CUSTOMER DRAWING No.: C 2-1393481-5

Sub-D 90° abgewinkelt Einpreß // D-Sub 90° press-in

V 2 3 5 2 9 – + ✳ ✳ ✳ ✳ – + ✳ ✳ ✳

EINBAUHÖHE // MOUNTING HEIGHT

R = Standardbauhöhe 7.3mm// Standard Style 7.3 mm

AUFBAU // CONFIGURATION

1 = isoliert // insulated
2 = geschirmt 1) // shielded 1)

BESCHRIFTUNG // MARKING

1 = tyco // tyco
2 = Neutral // neutral
3 = Sonderbeschriftung A// special marking A
4 = Sonderbeschriftung B// special marking B
5 = Sonderbeschriftung C// special marking C

ANSCHLUßAUSFÜHRUNG // CONTACT TYPE

0, 1 = EP-Stiel 3.2 mm // press-in pin 3.2 mm long

BEFESTIGUNG Steckseite/Leiterplatteseite // MOUNTING CONNECTOR/PCB

01 = Loch Φ3 / ohne Massekontakt 1) // hole Φ3 / without grounding
02 = Gewinde M3 / mit Massekontakt // thread M3 / with grounding
03 = Gewinde 4-40 UNC / mit Massekontakt // thread 4-40 UNC / with grounding
04 = Gewindebolzen M3 / mit Massekontakt // studbolt srewlock M3 / with grounding
05 = Gewindebolzen 4-40 UNC / mit Massekontakt// studbolt srewlock 4-40 UNC / with grounding

STECKERPOLZAHL // NO OF CONTACTS

09 = 9-polig // 9-contact
15 = 15-polig // 15-contact
25 = 25-polig // 25-contact
37 = 37-polig // 37-contacto rea

ANFORDERUNGSSTUFE //PERFORMANCE LEVEL

2 = Anf. II // PL II

STECKERART //CONNECTOR TYPE

C = Stiftleiste mit Schirmfiederung // male connector with grounding fingers

1) in Vorbereitung // in preparation

Active part numbers. Contact Tyco Electronics for other configuration availability

Old Part Number	Tyco Part Number
V23529-R1102-C209	2-1393481-5
V23529-R1102-C215	2-1393481-6
V23529-R1102-C225	2-1393481-7
V23529-R1102-C237	2-1393481-8
V23529-R1103-C209	3-1393481-2
V23529-R1103-C215	3-1393481-3
V23529-R1103-C225	3-1393481-4
V23529-R1103-C237	2-1392010-7
V23529-R1105-C209	3-1393481-8
V23529-R1105-C215	3-1393481-9
V23529-R1105-C225	2-1393497-7
V23529-R1105-C237	4-1393481-0

PROPRIETARY THIS INFORMATION IS CONFIDENTIAL AND PROPRIETARY TO TYCO ELECTRONICS CORPORATION AND ITS WORLDWIDE SUBSIDIARIES AND AFFILIATES. IT MAY NOT BE DISCLOSED TO ANYONE, OTHER THAN TYCO ELECTRONICS PERSONEL, WITHOUT WRITTEN AUTHORIZATION FROM TYCO ELECTRONICS CORPORATION, HARRISBURG, PENNSYLVANIA USA.

CHANGES TO THIS DRAWING MUST BE DONE ONLY IN CAD

PAPER SIZE A2

APPLICABLE SPEC.:

FINISH

DIMENSIONS APPLY PLATING

tyco Electronics

Tyco Electronics Corporation
Oostkamp - Belgium

Loc GW DIMENSIONS IN MM

SCALE WEIGHT

MATERIAL

DATE	7.2.96	
NAME	Sterckx	
APP.	CI PD	

NAME
Sub-D 90° abgewinkelt Standard Einpreß Stiftleiste
D-Sub 90° angled standard press fit Pin

TOLERANCE UNLESS SPECIFIED OTHERWISE

NO. V23529-R✳✳✳✳-C✳✳✳-✳-7427

SHT. 3 OF 3

REV.	CHANGE ORDER	DATE	APP.
A3	see page 1		

CUSTOMER DRAWING No.: C 2-1393481-5