THIS DRAWING IS UNPUBLISHED. RELEASED FOR PUBLICATION -
© COPYRIGHT copyright_dBYe-TYCO ELECTRONICS CORPORATION ALL RIGHTS RESERVED.

REVISIONS

P	LTR	DESCRIPTION	DATE	DWN	APVD
	A1	REVISE DRAWING	09DEC2019	S.Z	E.J
	B	REVISE DRAWING	12NOV2020	S.Z	I.Y
	C	REVISE DRAWING	11APR2022	S.Y	Z.Z
	D	ECN-23-209902	25APR2023	S.Y	Z.Z

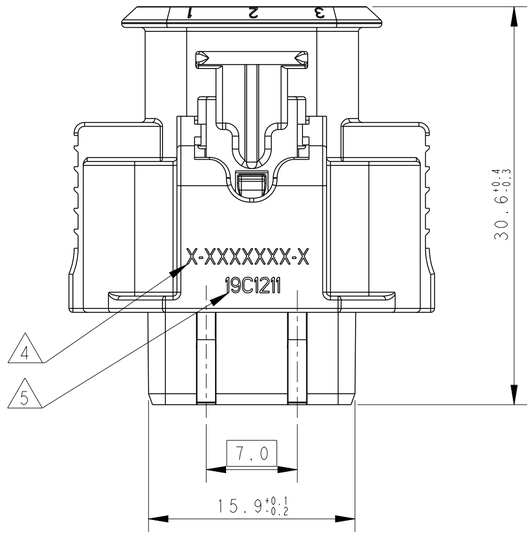

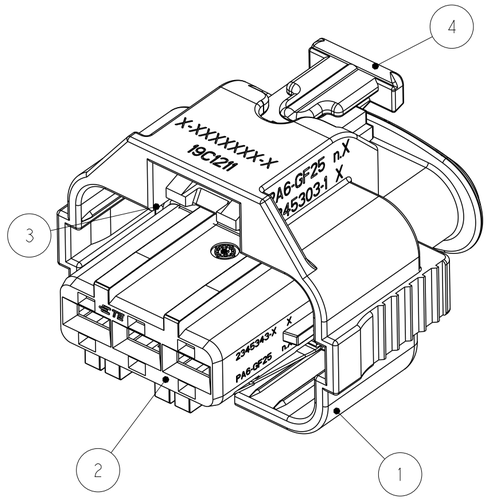

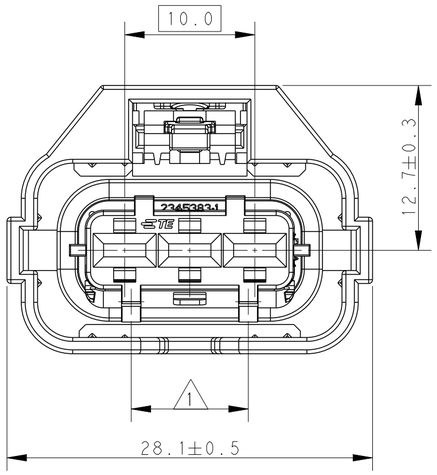

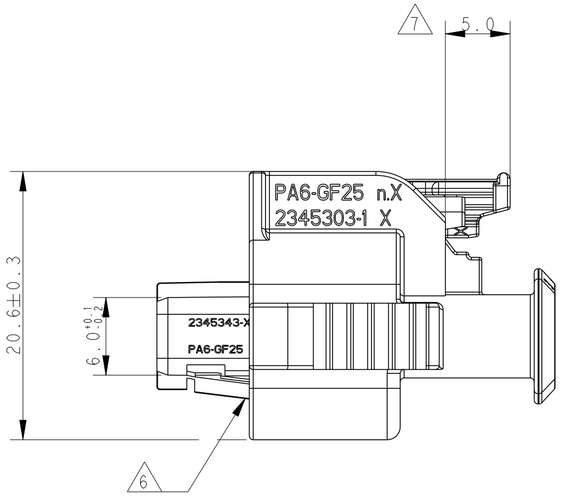

1. CODING IS AS FOLLOWS.SEE TABLE 1.

2. APPLIED RECEPTACLE CONTACT P/N:

DESCRIPTION	2.8mm SENSOR-FLAT RECEPTACLE OR EQUIVALENT	
PART NO.	967542 OR EQU	967543 OR EQU
WIRE SIZE	0.5~1.0	>1.0~2.5

3. APPLIED WIRE SEAL P/N:

DESCRIPTION	SINGLE-WIRE SEAL(5mm HOLE)	
PART NO.	828904	828905
INSULATION DIA.(Ø)	1.2~2.1mm	2.2~3.0mm

4. LASERPRINT MARK THE PRODUCT PART NUMBER. CHARACTER SIZE APPROX 1.2MM RAISE.CHARACTER LOCATION AND ORIENTATION AS SHOWN

5. LASERPRINT MARK DATE CODE:
INDENTIFIES THE YEAR, MONTH, DAY AND HOUR OF ASSEMBLY.
YEAR: FIRST AND SECOND DIGITS(17=2017)
MONTH: THIRD DIGIT , EXCLUDING I , A=JAN, B=FEB, C=MARCH...(K=OCTOBER)
DAY: FOURTH AND FIFTH DIGITS(14=14th DAY)
HOUR: SIXTH AND SEVENTH DIGITS(11=11AM)

6. SUPPLY CONDITION: HINGE IN PRELOCKED POSITION

7. SUPPLY CONDITION: CPA IN PRELOCKED POSITION

TABLE 1

CODE 1:2345390-1	CODE 11:2345390-2
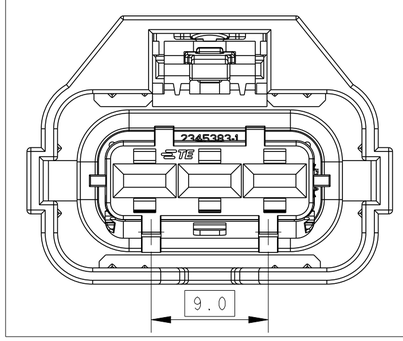	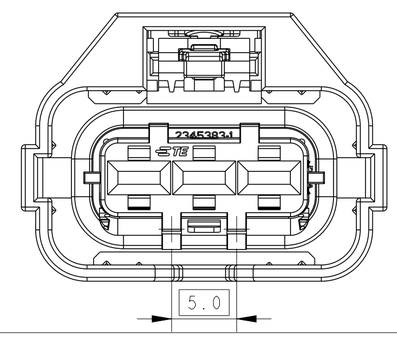

QTY PER ASSY		PARTS LIST				
5.6	5.6	WEIGHT OF EACH ASSY NO. [g]				
D	D	REVISON OF EACH ASSY NO.				
-2	-1	U/M	COLOR	MATERIAL	DESCRIPTION	ITEM
1	1	PC	BLACK	PA6-GF25	HOUSING	1
	1	PC	BLUE	PA6-GF25	CODE 1	2
1		PC	YELLOW	PA6-GF25	CODE 11	2
1	1	PC	GREEN	SILICON	INNER SEAL	3
1	1	PC	RED	PA46-GF15	CPA	4

THIS DRAWING IS A CONTROLLED DOCUMENT.

DIMENSIONS: mm

TOLERANCES UNLESS OTHERWISE SPECIFIED: ±0.3
0 PLC ±-
1 PLC ±-
2 PLC ±-
3 PLC ±-
4 PLC ±-
ANGLES ±5°

MATERIAL: SEE TABLE
FINISH: N/A

DWN D.ZHAO 26APR2019
CHK E.JIANG 26APR2019
APVD I.YIN 26APR2019
PRODUCT SPEC 108-32584
APPLICATION SPEC 114-160078
WEIGHT -

TE Connectivity

NAME: SEALED-3P-PLUG-CPA-ASSEMBLY (FLAT SENSOR CONNECTOR)

SIZE A2 | CAGE CODE | DRAWING NO C-2345390 | RESTRICTED TO -

CUSTOMER DRAWING | SCALE 2:1 | SHEET 1 OF 1 | REV D