Amphenol® NEXUS® Technologies

RUGGEDIZED CONNECTORS AND SWITCHES

TABLE OF CONTENTS:

3. About Amphenol NEXUS Technologies
4. Technologies Overview

6. Telephone Plugs and Jacks
7. Ruggedized Telephone Plugs
8. Ruggedized Telephone Jacks
9. Ruggedized Jack/Switch Combinations
10. Wiring Sequence and Mating Chart

11. M55116 Audio & M55116 Type Audio Connectors
12. Military & Commercial Connectors
14. How to Order
15. PCB Receptacles
16. Mating Chart
17. M55116 Type Right-angle Plug Connectors
18. Plug Size Comparison
19. TAC Connectors
20. Size Comparison

21. Watertight Breakaway Connectors
22. Part Numbers
24. Cable Harness Information and Mating Chart

25. Microphone Plugs and Jacks
25. Plug Part Numbers
26. Jack Part Numbers

27. MIL-C-8805/3 Push Button Switches
27. Hyrdo-Switch
28. How to Order
29. Contact Arrangements and Button Types
30. Conversion Table and Adapter Type

31. Problem Solver

ABOUT AMPHENOL NEXUS TECHNOLOGIES:

Since 1961, Amphenol NEXUS Technologies connectors have become the standard in military and commercial communication headset markets. Today, Amphenol NEXUS Technologies connectors are typically specified in OEM headset applications where “breakaway-style” audio connectors are required. Amphenol NEXUS Technologies switches have a very strong, ‘tactile-feedback’ feature that makes them ideal for applications that require a positive means of knowing that the switch has actuated. In addition, Amphenol NEXUS Technologies switches are designed for applications that require a durable, reliable and cost effective switching means. Other applications of Amphenol NEXUS Technologies connectors and pushbutton switches are in Auto Racing, Powerboat Racing, Telecommunications, Simulation Controls, Medical Products, Farm Equipment, and Commercial Aviation Electronics.

Amphenol NEXUS Technologies currently operates out of a 16,000 sq ft. facility, which is located in Stamford, CT. Amphenol NEXUS Technologies currently has over 60 employees, many of whom have been with Amphenol NEXUS Technologies for over 20 years. Amphenol NEXUS Technologies facilities and equipment include: thermoset and thermoplastic molding machines, stamping presses, numerous assembly fixtures, CNC Tool Room, Heat Treating equipment, Special Plating equipment, Testing Lab, Clean Room for switch assembly, CAD (Computer Aided Design), and other special proprietary processes that are designed to manufacture dependable quality products.

Amphenol NEXUS Technologies’ Quality Assurance System meets or exceeds the requirements of MIL-I-45208, MIL-Q-9858, MIL-STD-45662, and the sampling requirements of MIL-STD-105. We also use SPC to selectively monitor critical processes, which helps ensure process capability. We are currently on the U.S. Government’s QPL (Qualified Products List) for the following military specifications: MIL-DTL-9177, MIL-DTL-55116, and MIL-S-8805/3. All at Amphenol NEXUS Technologies, look forward to serving you with products that meet your satisfaction. Please contact us today to discuss your requirements.

OUR FACILITY:

- CNC Machining
- Thermoset and Thermoplastic Molding Machines
- Stamping Presses
- Numerous Assembly Fixtures
- Heat Treating Equipment
- CAD (Computer Aided Design)
- Tool Room, Test Lab, Clean Room
- Specialty Proprietary Processes

MARKETS SERVED:

- Military Radio Systems
- Military Ground Vehicles
- Missiles and Ordnance
- Commercial and Military Aerospace
- Telecommunications
- Medical Products
- Naval
- Simulation Controls
- Auto and Powerboat Racing

TECHNOLOGIES OVERVIEW:

SCOPE:

We specialize in designing and manufacturing high quality audio-style connectors, electro-mechanical devices, low voltage connectors, push button switches, and more.

LEGACY:

We have over 50 years of solving unique customer needs quickly. Most of our product lines were born out of rapidly designing the right solution for a customer issue.

LOOKING AHEAD:

As part of the Amphenol Military and Aerospace group, we can collaborate to provide unmatched product and technological solutions for any system need.

PRODUCTS :

TELEPHONE PLUGS AND JACKS

4, 5, 6 and 8-conductor plugs, jacks, and panel-mount jacks, Jack-switch combinations are available.

M55116-TYPE CONNECTORS

Mil-spec qualified for all shell styles and cable sizes. Many custom shielded designs, including right angle plugs and miniaturized TAC Series, which is less than half the size of standard M55116.

MICROPHONE PLUGS AND JACKS

2 and 3-pin with custom overmolded designs.

PUSH BUTTON SWITCHES

MIL-C-8805 qualified. 50,000 mechanical cycles. Momentary snap or push-pull versions. Many variations available with mounting types, button styles, colors, and watertight.

7 AND 10-CONDUCTOR WATERPROOF BREAKAWAY CONNECTORS

Overmolded or wire-strain relief available. Solder or insulation piercing contacts for tool-less assembly. Miniature versions 50% smaller than the standards.

OTHER CUSTOM DESIGNS

Specialized Missile Launch connectors, Downhole Rotatable Connectors for drilling operations, and many others.

TECHNOLOGIES :

DECREASED CONNECTOR SIZE

Plug and receptacle diameter at .500 inches for our miniaturized lines, 40% smaller than D38999 size 9 plug connector.

HARSH ENVIRONMENT

Waterproof, both mated and unmated, in 6 feet of water. Temperature range: -55C to +85C. Up to 5,000 mating cycles for most connectors. Also dust/ debris proof.

MULTIPLE CONTACT OPTIONS

Molded-in wiping action or spring-loaded contacts come with multiple termination options: solder, crimp, insulation piercing for tool-less assembly, PCB tails.

SPECIAL FEATURES

Shielded and grounded versions of most connectors available. Higher level builds, such as filter connectors, cable assemblies, and flex assemblies also available when collaborating with Amphenol sister divisions.

(Bayonet)

(Breakaway)

VARIOUS MATING STYLES

Bayonet coupling; Blind-Mate connectors; Quick-Disconnect/ Breakaway Connectors, using <15lbs mating/unmating force without a lanyard.

MARKETS SERVED :

Amphenol NEXUS Technologies proudly serves the following markets:

C4 Systems	Commercial Aerospace	Commercial/ Industrial	Medical Products
Soldier Systems	Missiles/ Ordnance	Telecommunications	Auto/Powerboat Racing
Military Vehicles	Naval	Simulation Controls	Many Others

FACILITY FACTS :

- Part of the Amphenol Family since July 2008
- Operates out of a 16,000 square foot facility
- Over 50 employees with more than 20 years of experience

TELEPHONE PLUGS AND JACKS:

Shells:	Plastic	
Contacts:	Plugs:	Nickel-plated Brass
		Monel
	Jacks:	Nickel-plated BeCu
Solder Contact Terminals:	Pre-tinned over nickel plating	
Contact Resistance:	≤ .02Ω	
Insulation Resistance:	≥ 1,000 mΩ	
Dielectric Withstanding Voltage:	≥ 500 V RMS	
Insertion Force:	13 lbs maximum	
Withdrawal Force:	6-10 lbs	

Amphenol NEXUS Technologies has been a long-time manufacturer and qualified military supplier of airborne audio connectors, see MIL-DTL-9177. Our special ruggedized design has been the industry standard on military and commercial helmets and headsets for many years.

In addition to the military qualified parts, we offer a number of connector options for different mounting styles, switch functions, and soldier attachments. Electrical, mechanical, and environmental features of these connectors include:

- Environment Resisting
- RFI/EMI Protection
- Low-level Circuit Capabilities
- High Cross-talk Resistance

This connector design isn't just limited to communications systems. Other markets are exploring the benefits of the quick-disconnect, rotatable connector design for harsh environments including drilling systems and other commercial/industrial applications.

RUGGEDIZED TELEPHONE PLUGS:

TP-120

Conductors: 4
Conductor Type:
Nickel-Plated Brass
Description:
1-Piece contacts molded into a plastic body.

TP-120-5

Conductors: 4
Conductor Type:
Nickel-Plated Brass
Description:
No plastic housing and strain relief clip; for custom molding directly to cable

TP-120-7

Conductors: 4
Conductor Type:
Nickel-Plated Brass
Description:
No plastic housing; for custom molding directly to cable

TP-101

Mil-Spec Designation:
U-174/U M9177/2-1
Conductors: 4
Conductor Type:
Monel
Description:
1-Piece contacts molded into a plastic body.

TP-102

Mil-Spec Designation:
U-93A/U M9177/1-1
Conductors: 4
Conductor Type:
Nickel-Plated Brass
Description:
1-piece contacts molded into a plastic body; accommodates larger cable diameter

TP-105

Mil-Spec Designation:
U-384/U M642/14-01
Conductors: 5
Conductor Type:
Monel
Description:
1-Piece contacts molded into a red plastic body.

TP-106

Conductors: 6
Conductor Type:
Nickel-Plated Brass and BeCu
Description:
6-Conductor Biaxial Shielded Plug

TP-108

Conductors: 8
Conductor Type:
Nickel-Plated Brass and BeCu
Description:
8-Conductor Biaxial Shielded Plug

TPSJ-101

Conductors: 4
Conductor Type:
Monel and Nickel-Plated BeCu
Description:
Telephone Plug with DPDT slide switch and MJ-101 jack section

RUGGEDIZED TELEPHONE JACKS:

TJ-120

Conductors: 4
Conductor Type:
Nickel-Plated BeCu
Description:
Flange Rear-Mounted Jack

TJG-120

Conductors: 5
Conductor Type:
Nickel-Plated BeCu
Description:
Flange Rear-Mounted Jack; with an extra contact added in a normally open circuit with the #1 contact. Insertion of a 4-conductor plug closes the #1-5 contact circuit.

TJS-120

Conductors: 5
Conductor Type:
Nickel-Plated BeCu
Description:
Flange Rear-Mounted Jack; with an extra contact added in a normally closed circuit with the #1 contact. Insertion of a 4-conductor plug closes the #1-5 contact circuit.

TJT-120

Conductors: 4
Conductor Type:
Nickel-Plated BeCu
Description:
Threaded Front-Mounted Jack

TJGT-120

Conductors: 5
Conductor Type:
Nickel-Plated BeCu
Description:
Threaded Front-Mounted Jack; with an extra contact added in a normally open circuit with the #1 contact. Insertion of a 4-conductor plug closes the #1-5 contact circuit.

TJ-101

Conductors: 4
Conductor Type:
Nickel-Plated BeCu
Description:
In-Line Jack; Contacts molded into a plastic body

TJ-102

Mil-Spec Designation:
U-92A/U M9177/3-1
Conductors: 4
Conductor Type:
Nickel-Plated BeCu
Description:
In-Line Jack; Contacts molded into a plastic body; accommodates larger cable diameter

TJ-105

Mil-Spec Designation:
U-385/U M641/22-01
Conductors: 5
Conductor Type:
Nickel-Plated BeCu
Description:
In-Line Jack; contacts molded into a red plastic body

TJ-106

Conductors: 6
Conductor Type:
Nickel-Plated Brass and BeCu
Description:
In-Line 6-Conductor Biaxial Shielded Jack

TJ-108

Conductors: 8
Conductor Type:
Nickel-Plated Brass and BeCu
Description:
In-Line 8-Conductor Biaxial Shielded Jack

NEXUS Part Number		Number of Conductors	Conductor Type	Description
TJT-102*	M9177/4-1	4	Nickel-Plated BeCu	Front Panel-Mounted version of TJ-102
TJT-105*		5	Nickel-Plated BeCu	Threaded Front-Mounted Jack; with red plastic body
TJT-125*		5	Nickel-Plated BeCu	Threaded Front-Mounted Jack; threaded mounting is contact #5
TJ-106PM*		6	Nickel-Plated Brass and BeCu	Panel Mount 6-Conductor Biaxial Shielded Jack
TJ-108PM*		8	Nickel-Plated Brass and BeCu	Panel Mount 8-Conductor Biaxial Shielded Jack

**Image not shown*

RUGGEDIZED JACK/SWITCH COMBINATIONS:

TJS-102

Mil-Spec Designation:
U-94/U M9177/5-2
Conductors: 4
Conductor Type:
Nickel-Plated BeCu
Description:
Combines a TJ-102 type jack with a momentary contact push-button switch and clothing clip

TJS-105

Conductors: 5
Conductor Type:
Nickel-Plated BeCu
Description:
Combines a TJ-105 type jack with a momentary contact push-button switch and clothing clip

TJS-106

Conductors: 6
Conductor Type:
Nickel-Plated Brass and BeCu
Description:
Telephone Jack Switch, Biaxial Shielded, 6 Conductors

TJSS-106

Conductors: 6
Conductor Type:
Nickel-Plated Brass and BeCu
Description:
Telephone Jack, 2 Switches, Biaxial Shileded, 6

TJS-108

Conductors: 8
Conductor Type:
Nickel-Plated Brass and BeCu
Description:
Telephone Jack Switch, Biaxial Shielded, 8 Conductors

TJSS-108

Conductors: 8
Conductor Type:
Nickel-Plated Brass and BeCu
Description:
Telephone Jack, 2 switches, Biaxial Shielded, 8 Conductors

TELEPHONE PLUGS & JACKS - WIRING SEQUENCE:

SUGGESTED WIRING SEQUENCE		
Monaural Headsets	Contact #1	Microphone, High
	Contact #2	Earphones, High
	Contact #3	Microphone, Low
	Contact #4	Earphones, Low
Binaural Headsets	Contact #1	Microphone, High
	Contact #2	Left Earphone
	Contact #3	Microphone, Low
	Contact #4	Right Earphone
	Contact #5	Earphones, Low

TELEPHONE PLUGS & JACKS - MATING CHART:

		PLUGS								
	MATES WITH	TP-120	TP-120-5	TP-120-7	TP-101	TP-102	TP-105	TP-106	TP-108	TPSJ-101
JACKS	TJ-120	X	X	X	X	X				X
	TJG-120	X	X	X	X	X				X
	TJS-120	X	X	X	X	X				X
	TJT-120	X	X	X	X	X				X
	TJGT-120	X	X	X	X	X				X
	TJST-120	X	X	X	X	X				X
	TJ-101	X	X	X	X	X				X
	TJ-102	X	X	X	X	X				X
	TJT-102	X	X	X	X	X				X
	TJ-105						X			
	TJT-105						X			
	TJT-125						X			
	TJ-106							X		
	TJ-106PM							X		
	TJ-108								X	
	TJ-108PM								X	
SWITCH COMBINATIONS	TJS-102	X	X	X	X	X				
	TJS-105						X			
	TJS-106							X		
	TJSS-106							X		
	TJS-108								X	
	TJSS-106								X	

M55116 AUDIO & M55116 TYPE AUDIO CONNECTORS

TECHNICAL SPECIFICATIONS	
Shell:	Stainless Steel, 303, Passivated
Mating:	Bayonet Coupling
Mating Cycles:	3,000
Temperature:	-55°C to +85°C
Insert Material:	Thermoset Plastic
Contacts:	Gold-plated Brass / Silver-plated BeCu (Springs)
Current Rating:	0.5 amperes
Voltage Rating:	60V max
Contact Depression:	1.25-1.75 lbs per contact
Contact Resistance:	.050 Ω max
Insulation Resistance:	1000 megaohms min, except for connectors unmated after immersion test shall not be less than 100 megaohms
Dielectric Withstanding Voltage; Sea Level:	500V RMS
Water Immersion:	6 feet of water up to 48 hours (mated & unmated)

Amphenol NEXUS Technologies manufactures the complete line of qualified MIL-DTL-55116 audio connectors which are used throughout military and commercial radio systems and intercom systems for ground, vehicle, airborne, and naval communications.

This connector series encompasses waterproof, polarized plugs and receptacles for use in audio frequency circuits at 60 volts maximum potential and 0.5 amperes maximum current. Connectors utilize either crimp sleeve or solder cup contacts. The rigid contacts in the plug connector mate with the pogo-pin, or spring loaded, contacts in the receptacle. In-line plugs and receptacles come with a wire strain relief. Receptacles are also available in panel-mount.

In addition to the standard versions, Amphenol NEXUS Technologies also designs and builds a wide variety of custom M55116-type connectors with options such as: PCB contacts, unique shell geometries, grounded and shielded connectors, and right-angle plug connectors. We also designed a complete miniaturized line of M55116 style connectors, the TAC Series, that meets the same performance requirements as the standard connectors in less than half the size and weight.

M55116 MILITARY & COMMERCIAL CONNECTORS:

Standard Plug Drawing :

AP-146 shown below, dimensions refer to all standard plugs in chart on page HOW TO ORDER

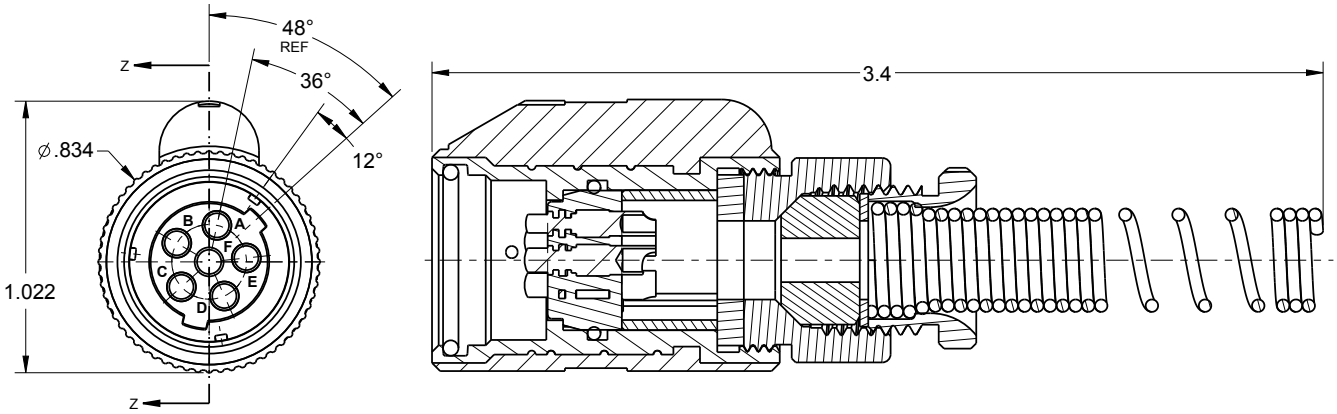

Shielded Plug Drawing :

AP-136 shown below, dimensions refer to the four shielded plugs in chart on page HOW TO ORDER

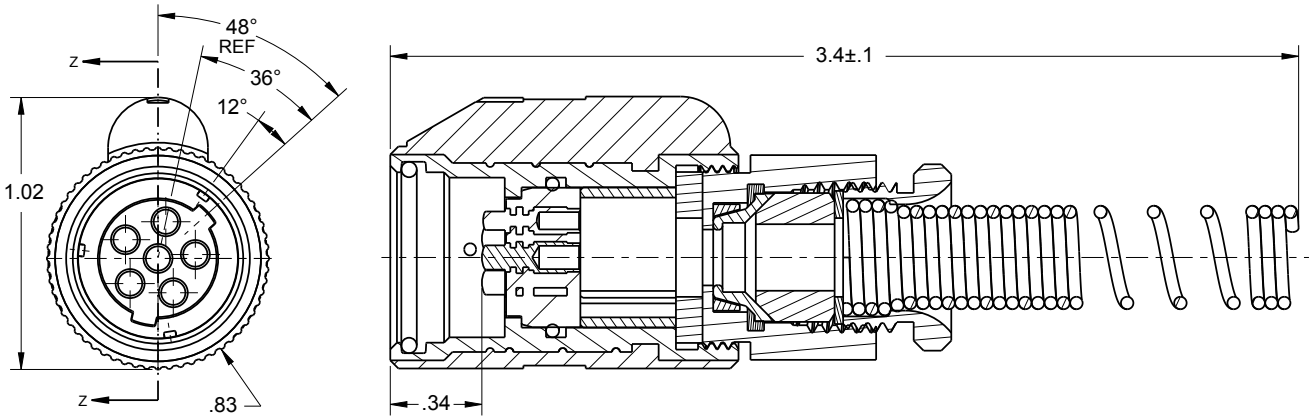

In-Line Receptacle Drawing :

AJ-166 shown below, represents receptacles with wire strain relief in chart on page HOW TO ORDER

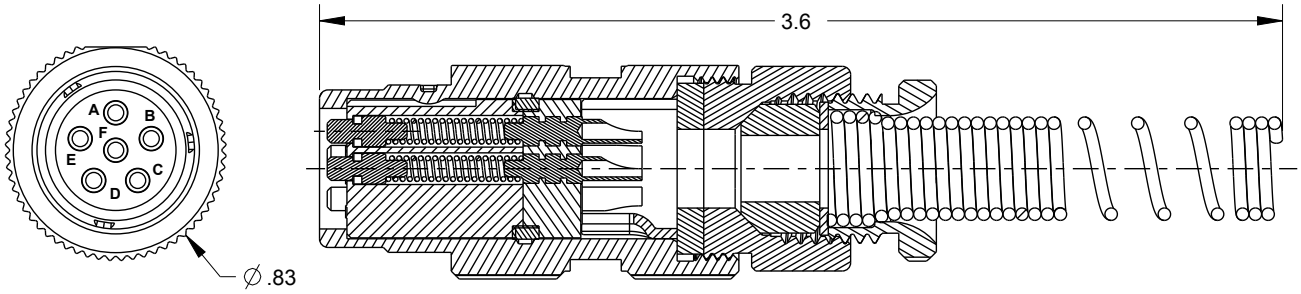

M55116 MILITARY & COMMERCIAL CONNECTORS:

Panel Mount Receptacle Drawing :

AJ-146 shown below, dimensions are the same for both the 5-pin and 6-pin layout

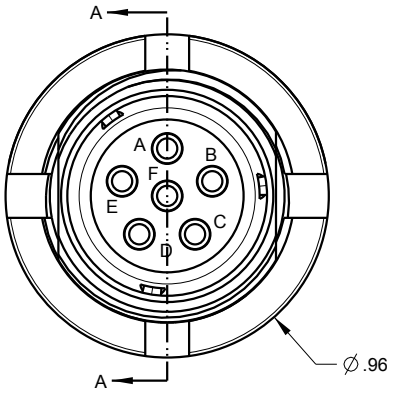

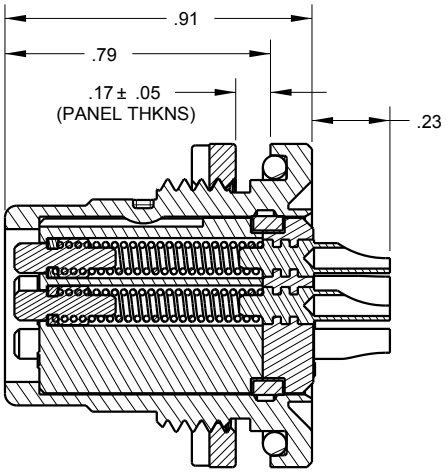

SECTION A-A
SCALE 3.000

5-pin Insert Layout :

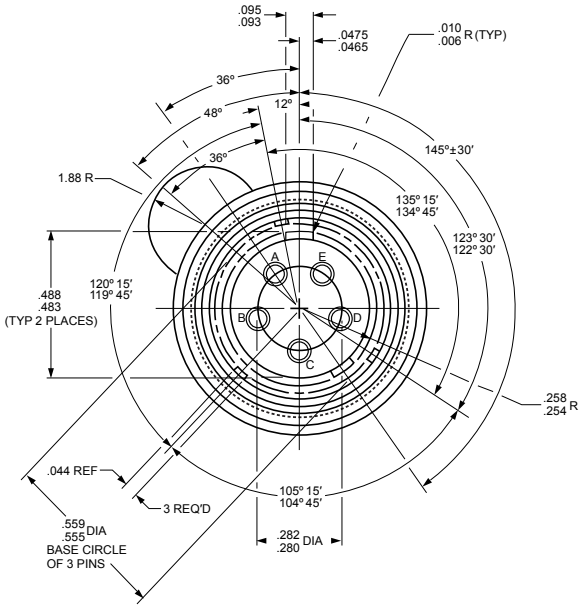

6-pin Insert Layout :

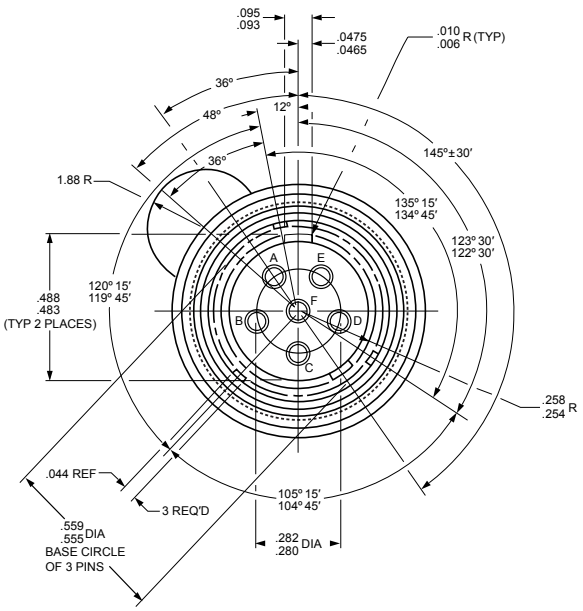

HOW TO ORDER:

Two Step Process Example :

1.	2.
Connector List	Cable Dimensions for Strain Relief
AP-125	X

1. Connector List

NEXUS Part Number	Mil-Spec Designation	Connector Type	Number of Contacts	Contact Type	Strain Relief
AP-125	M55116/1	Standard Plug	5	Crimp	Wire
AP-126	M55116/2	Standard Plug	6	Crimp	Wire
AP-145	M55116/3	Standard Plug	5	Solder	Wire
AP-146	M55116/4	Standard Plug	6	Solder	Wire
AP-155	M55116/5	Standard Plug	5	Crimp	Molded
AP-156	M55116/6	Standard Plug	6	Crimp	Molded
AP-165	M55116/7	Standard Plug	5	Solder	Molded
AP-166	M55116/8	Standard Plug	6	Solder	Molded
AJ-145	M55116/9	Panel Mout Receptacle	5	Solder Cup Spring	N/A
AJ-146	M55116/10	Panel Mout Receptacle	6	Solder Cup Spring	N/A
AJ-155	M55116/11	In-line Receptacle	5	Crimp Sleeve Spring	Wire
AJ-156	M55116/12	In-line Receptacle	6	Crimp Sleeve Spring	Wire
AJ-165	M55116/13	In-line Receptacle	5	Solder Cup Spring	Wire
AJ-166	M55116/14	In-line Receptacle	6	Solder Cup Spring	Wire
AP-105	U-182B/U	Standard Plug	5	Crimp	Molded
AP-106		Standard Plug	6	Crimp	Molded
AP-115	U-229B/U	Standard Plug	5	Crimp	Wire
AP-116		Standard Plug	6	Crimp	Wire
AP-135		Shielded Plug	5	Crimp	Wire
AP-136		Shielded Plug	6	Crimp	Wire
AP-175		Shielded Plug	5	Solder	Wire
AP-176		Shielded Plug	6	Solder	Wire

2. Cable Dimensions for Strain Relief

Dash Number	Mil-Spec Designation
-0	N/A (for Panel-Mount Receptacles Only
-1	.165 +/- .010
-2	.228 +/- .010
-3	.250 +/- .010
-4	.290 +/- .010
-5	.325 +/- .010

M55116 PCB RECEPTACLES:

PCB CONTACT OPTIONS				
PART #	Ø "A" ± .002	Ø "B"	"C"	"D"
AJ-146RMPC/1	.040	.089	.115	.169
AJ-146RMPC/2	.040	—	—	.437
AJ-146RMPC/3	.028	.089	.188	.590
AJ-146RMPC/4	.028	.089	.125	.194
AJ-146RMPC/5	.028	.089	.218	.257
AJ-146RMPC/6	.040	—	—	.110
AJ-146RMPC/7	.028	.089	.150	.437
AJ-146RMPC/8	.030	—	—	.120
AJ-146RMPC/9	.028	.089	.140	.390
AJ-146RMPC/10	.040	—	—	.744
AJ-146RMPC/11	.030	—	—	.594
AJ-146RMPC/13	.040	—	—	.900

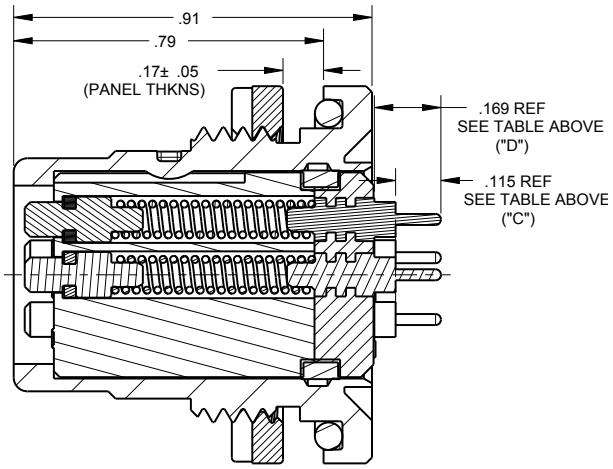

SECTION Z-Z
SCALE 4.000

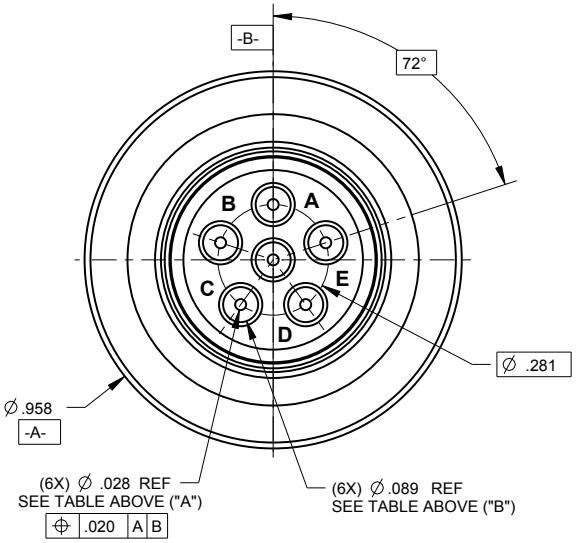

M55116 MATING CHART:

		JACKS					
		M55116/9 AJ-145	M55116/10 AJ-146	M55116/11 AJ-155	M55116/12 AJ-156	M55116/13 AJ-165	M55116/14 AJ-166
PLUGS	M55116/1 AP-125	X		X		X	
	M55116/2 AP-126		X		X		X
	M55116/3 AP-145	X		X		X	
	M55116/4 AP-146		X		X		X
	M55116/5 AP-155	X		X		X	
	M55116/6 AP-156		X		X		X
	M55116/7 AP-165	X		X		X	
	M55116/8 AP-166		X		X		X
	AP-105	X		X		X	
	AP-106		X		X		X
	AP-115	X		X		X	
	AP-116		X		X		X
	AP-135	X		X		X	
	AP-136		X		X		X
	AP-175	X		X		X	
	AP-176		X		X		X
	AP-186		X		X		X

M55116 TYPE RIGHT-ANGLE PLUG CONNECTORS

AP-RA Series Connectors

With space at a premium in today's military vehicles and systems, Amphenol NEXUS Technologies has met that demand with its new Right-Angle M55116-Type Plug Connectors.

Amphenol NEXUS Technologies has re-designed our in-line 5-and 6-conductor shielded plugs to have a 90° back-end to redirect the wires for space-saving purposes. Additionally, the cable location can then be indexed 180°.

FEATURES:

- 90° back-end to redirect the cables which saves almost 2 inches from the standard straight audio plug.
- Connector can be indexed, or clocked, in 13 different locations within a 180° spectrum to accommodate any system configuration.
- Molded-in pin contacts with standard solder cup or crimp-style terminals.
- Contacts provide self-cleaning feature and eliminate issues with pin/socket open contacts.
- Multiple wire strain reliefs accommodates .165 to .325 cable diameters.

OPTIONS:

- 5- or 6- contacts available, either solder or crimp versions.
- Wire strain relief can be supplied for larger/smaller size cable diameters.
- Over-molded versions are available.

HOW TO ORDER:

Contact Amphenol NEXUS Technologies for pricing, availability, or other technical questions

1.	2.	3.	4.	5.
Base Part Number	Contact Type	Number of Pins	Right Angle Designation	Other Options
AP-	13	6	RA-	OM

2. Contact Type

	Designates
13	Crimp
17	Solder

3. Number of Pins

	Designates
5	5 Pins
6	6 Pins

5. Other Options

Designates			
1	.165 Strain Relief	4	.290 Strain Relief
2	.228 Strain Relief	5	.325 Strain Relief
3	.250 Strain Relief	OM	Over-molded version

M55116 TYPE RIGHT-ANGLE PLUG SIZE COMPARISON:

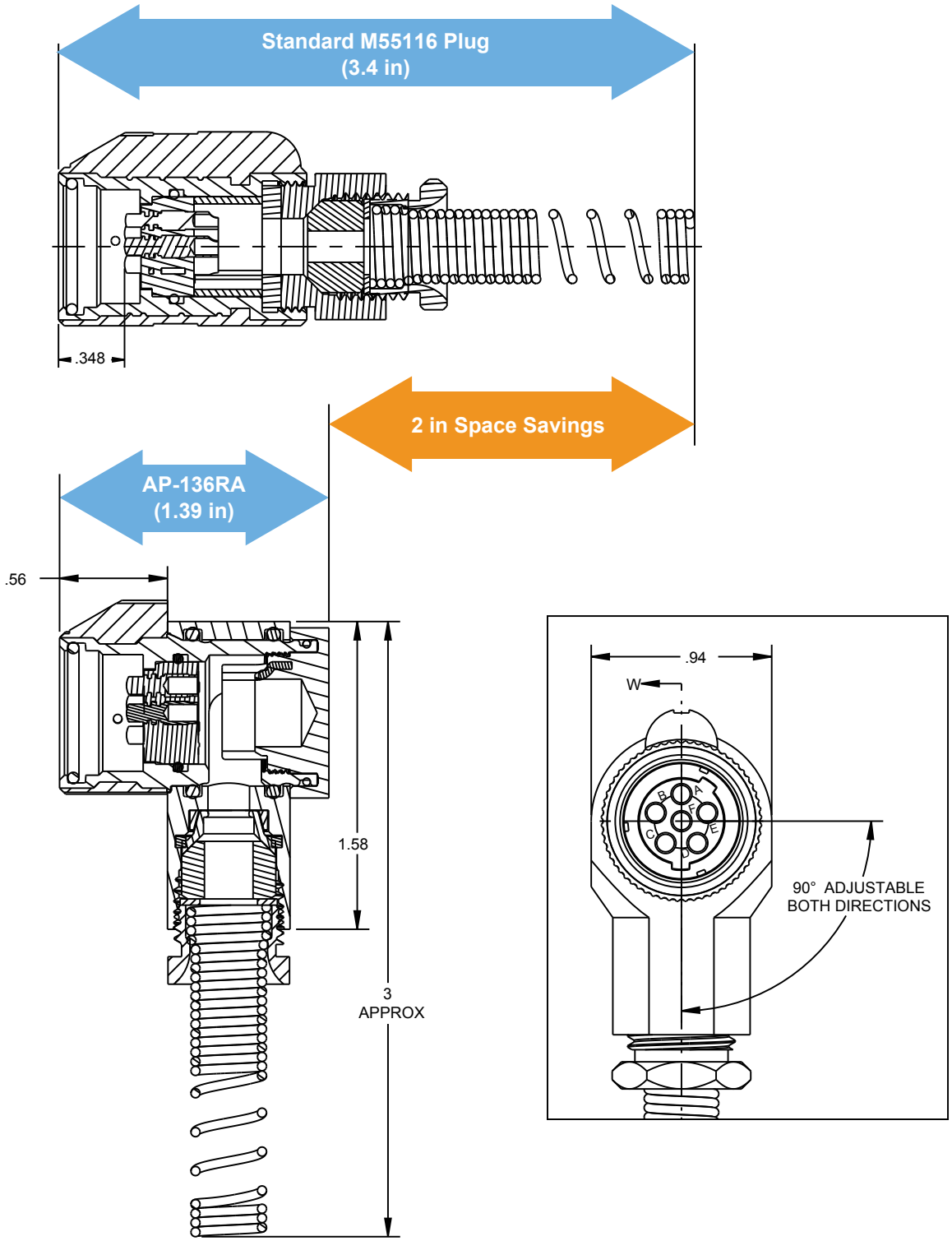

TAC CONNECTORS

Miniature M55116-Type Connectors

AVAILABLE PART NUMBERS:	
Part Number	Connector Style
MAP-56-30	6-Conductor Plug
MAP-57-30	7-Conductor Plug
MAP-56-50	6-Conductor Plug (for Overmolding)
MAP-57-50	7-Conductor Plug (for Overmolding)
MAJ-16-00	6-Conductor Panel Mount Jack
MAJ-17-00	7-Conductor Panel Mount Jack
MAJ-56-30	6-Conductor In-Line Jack
MAJ-57-30	7-Conductor In-Line Jack
MAP-60-50	10-Conductor Plug (for Overmolding)
MAP-60-00	10-Conductor Panel-Mount Plug
MAJ-60-50	7-Conductor In-Line Jack (for Overmolding)
MAJ-60-00	10-Conductor Panel-Mount Jack

New military and commercial applications are demanding a reduction in connector size and weight without a loss of performance. Amphenol NEXUS Technologies has met that demand with its new Miniature M55116-Type TAC Connectors for soldier worn applications, radio systems, and ruggedized communications systems.

TAC Connectors are designed and manufactured to the exacting specifications of MIL-DTL-55116 requirements at half the size of the standard connectors.

Amphenol NEXUS Technologies TAC Connectors are the ideal choice to reduce size and weight and still maintain many of the same performance benefits wherever a M55116 connector is needed on a newly designed system.

FEATURES:

- Both plug and receptacle are 50% smaller than the standard M55116 connectors. (M55116/4 and M55116/10 as a comparison)
- Standard plugs have rigid contacts; jacks have spring-loaded contacts
- Molded-in spring loaded contacts provide self-cleaning feature and eliminate issues with pin/socket open contacts.
- Standard wire strain relief accommodates .125 and .250 cable diameter.

OPTIONS:

- Shell Styles
  - In-Line Plug
  - Panel-Mount Plug
  - In-Line Jack
  - Panel Mount Jack
- Number of Contacts
  - 6-pin
  - 7-pin
  - 10-pin
- In-Line Rear Accessories
  - Wire Strain Relief
  - Over-Molded
- Contact Types
  - Solder Cup
  - PCB

Contact Amphenol NEXUS Technologies for pricing, availability, or other technical questions

TAC CONNECTOR SIZE COMPARISON:

Standard Plug Size Comparison :

MAJ-16-00 shown next to AJ-146

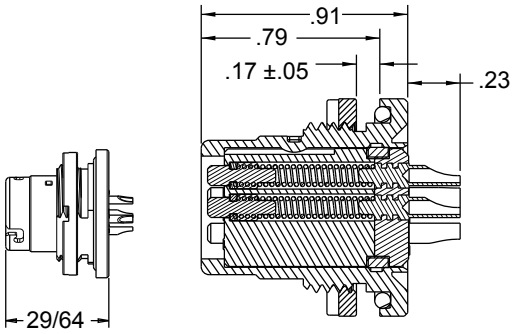

Shielded Plug Size Comparison :

MAP-56-30 shown next to AP-136

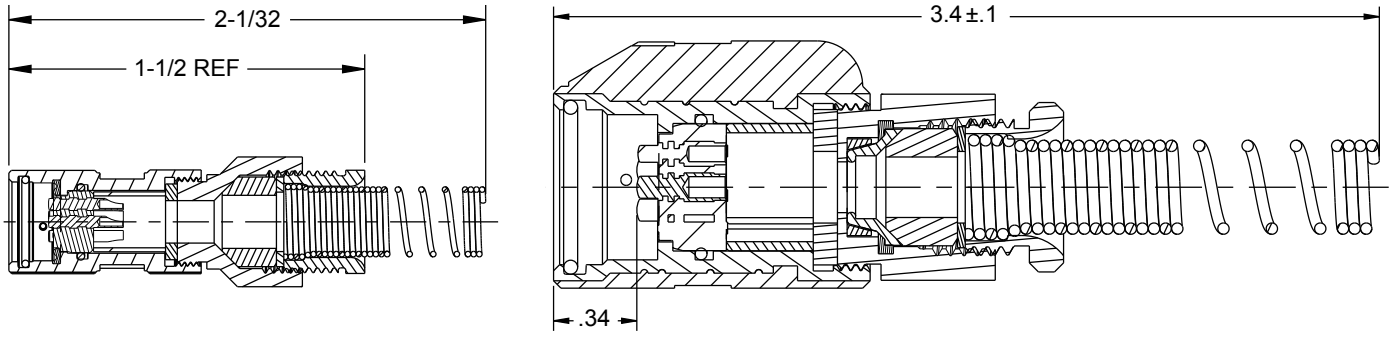

In-Line Receptacle Size Comparison :

MAJ-56-30 shown next to AJ-166

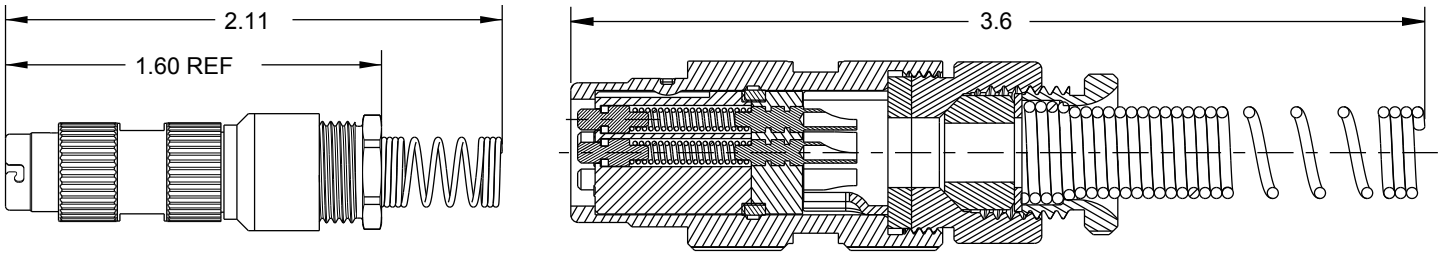

WATERTIGHT BREAKAWAY CONNECTORS

AP- and AJ- Series Connectors

TECHNICAL SPECIFICATIONS	
Shell:	Aluminum
Plating:	Black Anodize (standard); Black Chrome (shielded)
Insert:	Thermoset Plastic
Contacts:	Gold-plated Brass (Jacks) / Gold-plated BeCu (Plugs)
Mating:	Axial push-pull motion
Engagement Force:	≤ 14 lbs
Disengagement Force:	8-12 lbs. (Standard) 5-12 lbs. (Miniature)
Mating Cycles:	5000 (Standard) 3000 (Miniature
Temperature:	-55°C to +85°C
Contact Current Capacity:	2 amps maximum
Contact Resistance:	≤ 150 mV

Amphenol NEXUS Technologies is the leader in watertight, breakaway connectors designed to meet severe environmental conditions. Our connectors, which are watertight in up to 6 feet of water, have molded-on wiping-action contacts that provide a self-cleaning feature and eliminate issues with pin/socket open contacts.

The 7-Pin and 10-Pin connectors are designed for multiple cable diameters, are available in shielded versions, and can include either solder-type contacts of insulation-piercing contacts, which are field replaceable.

Many of the 7- and 10-pin Connectors also come in a miniature versions that is 50% smaller than the standard connector. All standard connector options are also available in the miniaturized versions.

APPLICATIONS:

- C4I Systems
- Military Vehicles
- Commercial Aircraft
- Telecommunications Equipment
- Missiles and Ordnance
- Medical Equipment
- Commercial / Industrial Equipment

WATERPROOF BREAKAWAY CONNECTORS:

AP-107

Connector Type: Plug
Number of Contacts: 7
Contact Type: Insulation Piercing
Rear Accessory: None

AJ-107

Connector Type: Jack
Number of Contacts: 7
Contact Type: Insulation Piercing
Rear Accessory: None

AP-107BRS

Connector Type: Plug, Shielded
Number of Contacts: 7
Contact Type: Solder
Rear Accessory: Wire Strain Relief

AJ-107BRS

Connector Type: Jack, Shielded
Number of Contacts: 7
Contact Type: Solder
Rear Accessory: Wire Strain Relief

AP-107PM

Connector Type: Jack, Front Mount Panel Mount
Number of Contacts: 7
Contact Type: Solder
Rear Accessory: None

AJ-107PM

Connector Type: Plug, Front Mount Panel Mount
Number of Contacts: 7
Contact Type: Solder
Rear Accessory: None

AP-117OM

Connector Type: Plug, Miniature
Number of Contacts: 7
Contact Type: Solder
Rear Accessory: Overmold

AJ-117OM

Connector Type: Jack, Miniature
Number of Contacts: 7
Contact Type: Solder
Rear Accessory: Overmold

AP-117BR

Connector Type: Plug, Miniature
Number of Contacts: 7
Contact Type: Solder
Rear Accessory: Wire Strain Relief (.148 max)

AJ-117BR

Connector Type: Jack, Miniature
Number of Contacts: 7
Contact Type: Solder
Rear Accessory: Wire Strain Relief (.148 max)

AJ-117PM

Connector Type: Front Panel-Mount Jack, Miniature
Number of Contacts: 7
Contact Type: Solder
Rear Accessory: None

AP-110BRXL

Connector Type: Plug, Miniature
Number of Contacts: 10
Contact Type: Solder
Rear Accessory: Wire Strain Relief (.250 max)

AJ-110BRXL

Connector Type: Jack, Miniature
Number of Contacts: 10
Contact Type: Solder
Rear Accessory: Wire Strain Relief (.250 max)

WATERPROOF BREAKAWAY CONNECTORS CONTINUED:

NEXUS Part Number	Connector Type	Number of Contacts	Contact Type	Rear Accessory
AP-107BR*	Plug	7	Solder	Wire Strain Relief
AJ-107BR*	Jack	7	Solder	Wire Strain Relief
AP-117BRXL*	Plug, Miniature	7	Solder	Wire Strain Relief (.250 max)
AJ-117BRXL*	Jack, Miniature	7	Solder	Wire Strain Relief (.250 max)
AP-107DR*	Plug	7	Insulation Piercing	Overmold Cap
AJ-107DR*	Jack	7	Insulation Piercing	Overmold Cap
AP-107DRS*	Plug, Shielded	7	Insulation Piercing	Overmold Cap
AJ-107DRS*	Jack, Shielded	7	Insulation Piercing	Overmold Cap
AP-117LR-AL*	Plug, Miniature w/Threaded Locking Ring	7	Solder	Wire Strain Relief (.250 max)
AJ-117LR-AL*	Jack, Miniature w/Threaded Locking Ring	7	Solder	Wire Strain Relief (.250 max)
AP-117PLR*	Plug, Miniature w/Threaded Locking Ring	7	Solder	Overmold
AJ-117PLR*	Jack, Miniature w/Threaded Locking Ring	7	Solder	Overmold
AJ-117PMDC*	Jack, Rear Panel-Mount, Miniature	7	Solder	None
AP-110OM*	Plug, Miniature	10	Solder	Overmold
AJ-110OM*	Jack, Miniature	10	Solder	Overmold
AP-110OMS*	Plug, Miniature, Shielded	10	Solder	Overmold
AJ-110OMS*	Jack, Miniature, Shielded	10	Solder	Overmold

**Image not shown*

CABLE HARNESS INFORMATION:

NEXUS Part Number	Cable Holder		Cable Seal	Cable (6 Conductor) with Shield
	Part Number	Figure Below		
AP-107XL AJ-107XL	AP-107-3BXL AJ-107-3GXL	A	AP-107-27	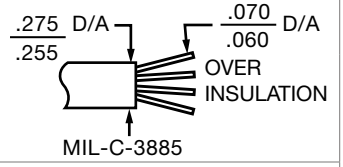
AP-107XLS AJ-107XLS	AP-107-3BXLS AJ-107-3BXLS	B	AP-107-27	
AP-107 AJ-107	AP-107-3B AJ-107-3G	C	Customer molds strain relief, then uses AP-107-27	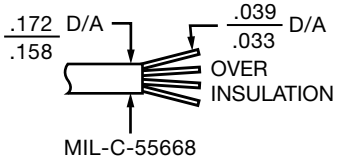
AP-107A AJ-107A	AP-107-3B AJ-107-3G	C	AP-107-31	

WATERTIGHT BREAKAWAY CONNECTOR MATING CHART:

		JACKS													
	MATES WITH	AJ-107	AJ-107BR	AJ-107BRS	AJ-107DR	AJ-107DRS	AJ-1100M	AJ-1100MS	AJ-117BR	AJ-117BRXL	AJ-117LRAL	AJ-117OM	AJ-117PRL	AJ-117PM	AJ-117PMDC
PLUGS	AP-107	X	X	X	X	X									
	AP-107BR	X	X	X	X	X									
	AP-107BRS	X	X	X	X	X									
	AP-107DR	X	X	X	X	X									
	AP-107DRS	X	X	X	X	X									
	AP-1100M						X	X							
	AP-1100MS						X	X							
	AP-117BR								X	X		X		X	X
	AP-117BRXL								X	X				X	X
	AP-117LR-AL										X				
	AP-117OM											X		X	X
	AP-117PLR												X		

MICROPHONE PLUGS AND JACKS

Amphenol NEXUS Technologies has been a long-time supplier of microphone plugs and jacks to the military and commercial helmet and headset industry. Our reliable products are the standard connector of choice for ruggedized, quality communications systems.

Our microphone plugs and jacks are available with either 2 or 3-pins and a locking mechanism. Other designs include selector switches and connector designs with other standard Amphenol NEXUS products.

MICROPHONE PLUGS:

MP-101

Mil-Spec Designation: U-173/U
Conductors: 2
Conductor Type: Nickel-Plated BeCu
Description: 2-pin Microphone Plug; nylon body

MP-103

Conductors: 3
Conductor Type: Nickel-Plated BeCu (x2) Brass (x1)
Description: 2-pin Microphone Plug; nylon body

MJ-101

Mil-Spec Designation: U-172/U
Conductors: 2
Conductor Type: Nickel-Plated BeCu
Description: 2-conductor Microphone Jack; nylon body

MJ-103

Conductors: 3
Conductor Type: Nickel-Plated BeCu
Description: 2-conductor Microphone Jack; nylon body with button release

MJ-102

Mil-Spec Designation: U-179A/U
Conductors: 2
Conductor Type: Nickel-Plated BeCu
Description: 2-conductor Microphone Jack; nylon body with button release

MICROPHONE JACKS:

MJ-112

Conductors: 2
Conductor Type:
Nickel-Plated BeCu
Description:
2-conductor Microphone Jack; nylon body with button release

MJ-122

Mil-Spec Designation:
JJ-055
Conductors: 2
Conductor Type:
Nickel-Plated BeCu
Description:
2-conductor Microphone Jack; glass-filled nylon body

MJ-132

Mil-Spec Designation:
JJ-055
Conductors: 2
Conductor Type:
Nickel-Plated BeCu
Description:
2-conductor Microphone Jack; glass-filled nylon body, used with smaller diameter cable

MJ-113

Conductors: 3
Conductor Type:
Nickel-Plated BeCu
Description:
3-conductor Microphone Jack; nylon body

MJS-103

Conductors: 3
Conductor Type:
Nickel-Plated BeCu
Description:
Microphone Jack Switch - functions as a selector switch to choose either a boom microphone or a gas mask microphone by use of the switch lever.

OMJ-101

Conductors: 2
Conductor Type:
Nickel-Plated BeCu
Description:
2-conductor Microphone Jack; designed for over-molding

MIL-C-8805/3 PUSH BUTTON SWITCHES

TECHNICAL SPECIFICATIONS	
AC Rating:	10 amps at 115 vac (Resistive load) 5 amps at 115 vac (Inductive load) 3 amps at 115 vac (Lamp load)
DC Rating:	10 amps at 28 vdc (Resistive load) 5 amps at 28 vdc (Inductive load) 3 amps at 28 vdc (Lamp load)
Type 7 Contact Arrangement:	Ratings are one half amperage
Mechanical Life:	500,000 cycles
Action:	Momentary snap of push-pull (as specified)
Plunger Travel:	.085 inch (approx.)
Operating Force:	
Ser. 20 & 30	3 to 5 pounds momentary 1/2 to 2 pounds push-pull
Ser. 22 & 32	2 to 3 pounds
Weight	050 pound maximum
Case:	Aluminum alloy. 2001 - T3, anodized in accordance with MIL-A-8625
Plunger:	Glass filled nylon
Body:	Diallyl phthalate in accordance with MIL-M-14
Terminals:	Threaded 2-56 NC-2B
Terminal Hardware:	Solder-type wire terminals, with terminal mounting screws and lockwashers, supplied with each switch.
Mounting:	Basic switch supplied with 1/2-32 UN-2B nut and internal tooth lockwasher. Switch with mounding adapter C,F,G or H supplied with 5/8-24 UNEF-2B nut and internal tooth lockwasher.
Special:	Additional types of mounting, button styles, colors, and other variations are available on special order.

Amphenol NEXUS Technologies manufactures a wide variety of push-pull and momentary switches for multiple markets and applications. Many of the switches can be incorporated with our connectors for customers have come to rely on our design capabilities and prefer the tactile feel of our quality switches.

In addition to the MIL-S-8805/3, or MS25089, switches, Amphenol NEXUS Technologies makes a number of custom switches to meet a wide variety of design needs.

Our switches are used in many military and commercial applications including:

- Military and Commercial Aircraft
- Avionics
- Ground Vehicles
- Naval Systems
- Ruggedized Communications systems
- Command Systems
- Soldier Systems
- Industrial Applications

HYDRO-SWITCH:

Amphenol NEXUS Technologies now offers MIL-S-8805/3 type watertight switches that meet IP68 water submersion requirements. This new Hydro-Switch has the same mechanical and electrical properties of our NX300 series switches with the added bonus of being watertight. It can be used as a direct drop-in replacement for designs utilizing current Amphenol NEXUS Technologies' switches. The new Hydro-Switch has the same quality customers expect from an Amphenol NEXUS Technologies product.

HOW TO ORDER:

Seven Step Process Example :

1.	2.	3.	4.	5.	6.	7.
Base Part Number	Switch Series	Contact Arrangement	Adapter Type	Adapter Color	Button Style	Button Color
NX	30	2	C	R	1	B

1. Base Part Number

NX	Standard Switch
NXW	Hydro-Switch **

2. Switch Series

20	Standard Momentary or push-pull switches
22	Standard switches with 2 lb operating force
30	Dustproof momentary or push-pull switches
32	Dustproof switches with 2 lb operating force

3. Contact Arrangements

1	SPNO: Single pole, normally open
2	SPNC: Single pole, normally closed
3	2-CIR: Two circuit
4	3-TNO: Three terminal, normally open
5	3-TNC: Three terminal, normally closed
6	SPDT: Single pole, double thow
7	DPST: Double pole, single throw, normally open

4. Adapter Type *(See page 30)*

O	Basic Switch (no adapter)
A	MIL type A
B	MIL type B
C	MIL type C
E	MIL type E
F	MIL type F
G	MIL type G
H	MIL type H

5. Adapter Color

B	Standard color; black
R	Red
C	Clear metal (aluminum)
O	Without Adapter

6. Button Style

1
2
3
5
6
8

7. Button Color

B	Standard color; black
R	Red
G	Gray
W	White
Y	Yellow

** Hydro-Switch is only available in 300 Series Switches

PUSH BUTTON SWITCH CONTACT ARRANGEMENTS & BUTTON TYPES:

CONTACT ARRANGEMENTS

(1) SPNO	(2) SPNC	(3) 2-CIRCUIT	(4) 3-TERMINAL	(5) 3-TERMINAL	(6) SPDT	(7) DPST-NO
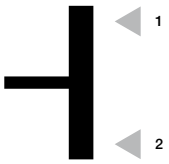		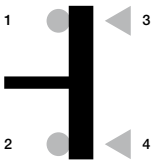	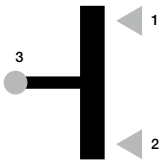	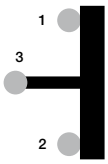	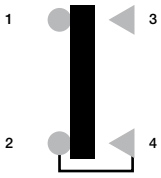	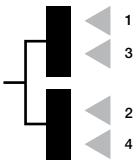
Single Pole Normally Open	Single Pole Normally Closed	Can Be Jumpered For SPDT	Single Pole Normally Open	Single Pole Normally Closed	Single Pole Double Throw	Double Pole Single Throw Normally Open

BUTTON STYLES

Switches Without Adapters: (See Note 1)		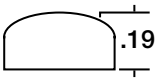	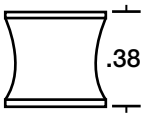	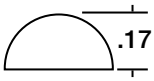	With Adapter	With Adapter No. 8
	No. 1	No. 2	No. 3	No. 5	No. 6	
Switches With Adapters: (See Note 2)		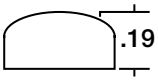	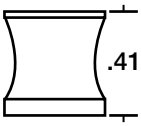	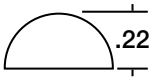	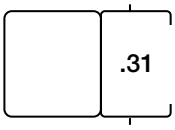	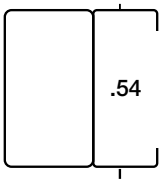

1. **SWITCHES WITHOUT ADAPTERS:** The button height dimension shown for both Series 300 switches is taken from top of rubber boot to top of button. Button numbers 1, 3 (push-pull), and 5 is for the Series 300 dustproof switches. The only button available for series 200 switches is the number 2. The button height dimension shown is taken from the top of the housing to the top of the button.

2. **SWITCHES WITH ADAPTERS:** The button height dimension shown for both series of switches is taken from top adapter to top of button. Button numbers 1, 3 (push-pull), and 5 is for the Series 300 dustproof switches. Buttons 2, 6, and 8 are for the Series 200 standard switches.

CONVERSION TABLE AND ADAPTER TYPE:

Mounting	Switch Action	Button Color	Contact 1	Contact 2	Contact 3	Contact 4	Contact 5
A 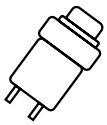	Momentary	Black	MS25089-1A	MS25089-2A	MS25089-3A	MS25089-4A	MS25089-5A
			NX301AB1B	NX302AB1B	NX303AB1B	NX304AB1B	NX305AB1B
		Red	MS25089-1AR	MS25089-2AR	MS25089-3AR	MS25089-4AR	MS25089-5AR
			NX301AB1R	NX302AB1R	NX303AB1R	NX304AB1R	NX305AB1R
B 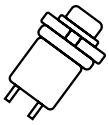	Momentary	Black	MS25089-1B	MS25089-2B	MS25089-3B	MS25089-4B	MS25089-5B
			NX301BB1B	NX302BB1B	NX303BB1B	NX304BB1B	NX305BB1B
		Red	MS25089-1BR	MS25089-2BR	MS25089-3BR	MS25089-4BR	MS25089-5BR
			NX301BB1R	NX302BB1R	NX303BB1R	NX304BB1R	NX305BB1R
C 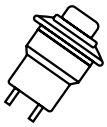	Momentary	Black	MS25089-1C	MS25089-2C	MS25089-3C	MS25089-4C	MS25089-5C
			NX301CB1B	NX302CB1B	NX303CB1B	NX304CB1B	NX305CB1B
		Red	MS25089-1CR	MS25089-2CR	MS25089-3CR	MS25089-4CR	MS25089-5CR
			NX301CB1R	NX302CB1R	NX303CB1R	NX304CB1R	NX305CB1R
	Push-Pull	Black	MS25089-1C-1	MS25089-2C-1	MS25089-3C-1		
			NX301CB3B	NX302CB3B	NX303CB3B		
		Red	MS25089-1CR-1	MS25089-2CR-1	MS25089-3CR-1		
			NX301CB3R	NX302CB3R	NX303CB3R		
E 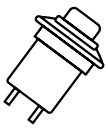	Momentary	Black	MS25089-1E	MS25089-2E	MS25089-3E	MS25089-4E	MS25089-5E
			NX301EB1B	NX302EB1B	NX303EB1B	NX304EB1B	NX305EB1B
		Red	MS25089-1ER	MS25089-2ER	MS25089-3ER	MS25089-4ER	MS25089-5ER
			NX301EB1R	NX302EB1R	NX303EB1R	NX304EB1R	NX305EB1R
F 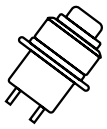	Momentary	Black	MS25089-1F	MS25089-2F	MS25089-3F	MS25089-4F	MS25089-5F
			NX301FB1B	NX302FB1B	NX303FB1B	NX304FB1B	NX305FB1B
		Red	MS25089-1FR	MS25089-2FR	MS25089-3FR	MS25089-4FR	MS25089-5FR
			NX301FB1R	NX302FB1R	NX303FB1R	NX304FB1R	NX305FB1R
	Push-Pull	Black	MS25089-1F-1	MS25089-2F-1	MS25089-3F-1		
			NX301FB3B	NX302FB3B	NX303FB3B		
		Red	MS25089-1FR-1	MS25089-2FR-1	MS25089-3FR-1		
			NX301FB3R	NX302FB3R	NX303FB3R		
G 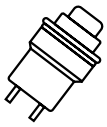	Momentary	Black	MS25089-1G	MS25089-2G	MS25089-3G	MS25089-4G	MS25089-5G
			NX301GB1B	NX302GB1B	NX303GB1B	NX304GB1B	NX305GB1B
		Red	MS25089-1GR	MS25089-2GR	MS25089-3GR	MS25089-4GR	MS25089-5GR
			NX301GB1R	NX302GB1R	NX303GB1R	NX304GB1R	NX305GB1R
	Push-Pull	Black	MS25089-1G-1	MS25089-2G-1	MS25089-3G-1		
			NX301GB3B	NX302GB3B	NX303GB3B		
		Red	MS25089-1GR-1	MS25089-2GR-1	MS25089-3GR-1		
			NX301GB3R	NX302GB3R	NX303GB3R		
H 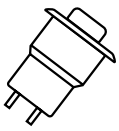	Momentary	Black	MS25089-1H	MS25089-2H	MS25089-3H	MS25089-4H	MS25089-5H
			NX301HB1B	NX302HB1B	NX303HB1B	NX304HB1B	NX305HB1B
		Red	MS25089-1HR	MS25089-2HR	MS25089-3HR	MS25089-4HR	MS25089-5HR
			NX301HB1R	NX302HB1R	NX303HB1R	NX304HB1R	NX305HB1R
	Push-Pull	Black	MS25089-1H-1	MS25089-2H-1	MS25089-3H-1		
			NX301HB3B	NX302HB3B	NX303HB3B		
		Red	MS25089-1HR-1	MS25089-2HR-1	MS25089-3HR-1		
			NX301HB3R	NX302HB3R	NX303HB3R		

PROBLEM SOLVER

That's how our customers think of us, as their exclusive Problem Solver. With our prompt response, the Amphenol NEXUS Technologies team can redesign your old product to meet your current custom needs.

CUSTOMER SUPPORT TEAM

Most quotes are turned around the same day allowing you the opportunity to submit your budgets on time.

DESIGN CONSULTING TEAM

With in-house 3-D design capabilities, solutions can be on your desk in 3 days.

ENGINEERING TEAM

Our CNC machining, tooling, stamping, molding, and kitting capabilities support our engineering expertise and allows delivery of prototypes promptly.

QUALITY ASSURANCE TEAM

We make sure that the materials requested meet the product's environmental specifications for reliability and endurance, whether your product utilizes domestic or international compliance. We are available to meet with your staff and bring our consulting capabilities right to your facility. Building on our strength of decades of engineering experience, our team can solve technical problems by designing around your specific needs.

AMPHENOL OFFICE LISTINGS:

Amphenol Aerospace Operations
40-60 Delaware Avenue
Sidney, NY 13838
800-678-0141

Amphenol Commercial Air Division
40-60 Delaware Avenue
Sidney, NY 13838
1-800-687-0141

Amphenol Nexus Technologies
50 Sunnyside Avenue
Stamford, CT 06902
203-327-7300

Amphenol PCD
72 Cherry Hill Drive
Beverly, MA 01915
978-624-3400

Amphenol SV Microwave
2400 Centrepark West Drive
West Palm Beach, FL
561-840-1800

Amphenol Times Microwave, Inc.
358 Hall Avenue
Wallingford, CT 06492
800-867-2629

Amphenol Fiber Systems International
1300 Central Expressway North, Suite 100
Allen, TX 75013
214-547-2400

Amphenol Borisch Technologies
4511 East Paris AVE
Grand Rapids, MI 49512
616-554-9820

Amphenol Printed Circuit Board Technology
91 Northeastern Boulevard
Nashua, NH 03062
603-324-4500

Amphenol Griffith Enterprises
6000 East Coury Drive
Cottonwood, AZ 86326
928-634-3685

Amphenol Canada
605 Milner Avenue
Toronto, ON Canada M1B 5X6
416-291-0647

Amphenol Invotec
Unit 1-3, Hedging Lane Industrial Estate
Dosthill, Tamworth, B77 5HH
United Kingdom
+44 (0) 1827 263250

Amphenol Ionix Systems
Prospect House, Taylor Business Park
Risley, Warrington, WA3 6HP
United Kingdom
+44 (0) 1942 685200

Amphenol Limited
Thanet Way
Whitstable, Kent, CT5 3JF
United Kingdom
+44 (0) 1227 773200

Amphenol Socapex
948 Promenade De L'Arve – BP 29
74311 Thyez
France
+33 (0) 4 50 89 28 00

Amphenol Air LB SAS
2 Rue Clément Ader, Zac de Wé
08110 Carignan
France
+33 (0) 03 24 22 78 49

Amphenol AirLB GmbH
Am Kleinbahnhof 4
D-66740 Saarlouis
Germany
+49 (0) 68 31/98 10 0

Amphenol SEFEE
Z.I. des Cazes – BP243
12402 Saint-Affrique Cedex
France
+33 (0) 5 65 98 11 00

Amphenol Interconnect India
105, Bhosari Industrial Area
Pune – 411 026
India
+91 20 27120363

Amphenol Japan, Ltd.
471-1, Deba, Ritto-City
Shiga, 520 3041
Japan
+81 77 553 8501

Amphenol Martec Limited
St. Augustines Business Park
Swalecliffe, Whitstable, Kent
CT5 2QJ
United Kingdom
+44 (0) 1227 793 733

Amphenol Optimize
Carretera Internacional Km 6.5
Col. Parque Industrial
Nogales, Sonora, México. C.P. 84094
+52 (631) 311-160

Amphenol Ionix Systems OÜ
Pikk Street 59b
Kuressaare 93815
Estonia
+372 4521 780

Amphenol Military & Aerospace Operations – European Sales Operations
Via Barbaiana 5
20020 Lainate
Milano, Italy
+39 02 932 541

HYDRO-SWITCH

TECHNICAL SPECIFICATIONS	
AC Rating:	10 amps at 115 vac (Resistive load) 5 amps at 115 vac (Inductive load) 3 amps at 115 vac (Lamp load)
DC Rating:	10 amps at 28 vdc (Resistive load) 5 amps at 28 vdc (Inductive load) 3 amps at 28 vdc (Lamp load)
Type 7 Contact Arrangement:	Ratings are one half amperage
Mechanical Life:	500,000 cycles
Action:	Momentary snap of push-pull (as specified)
Plunger Travel:	.085 inch (approx.)
Operating Force:	
Ser. 20 & 30	3 to 5 pounds momentary 1/2 to 2 pounds push-pull
Ser. 22 & 32	2 to 3 pounds
Weight	050 pound maximum
Case:	Aluminum alloy. 2001 - T3, anodized in accordance with MIL-A-8625
Plunger:	Glass filled nylon
Body:	Diallyl phthalate in accordance with MIL-M-14
Terminals:	Threaded 2-56 NC-2B
Terminal Hardware:	Solder-type wire terminals, with terminal mounting screws and lockwashers, supplied with each switch.
Mounting:	Basic switch supplied with 1/2-32 UN-2B nut and internal tooth lockwasher. Switch with mounding adapter C,F,G or H supplied with 5/8-24 UNEF-2B nut and internal tooth lockwasher.
Special:	Additional types of mounting, button styles, colors, and other variations are available on special order.

Amphenol NEXUS Technologies now offers MIL-S-8805/3 type watertight switches that meet IP68 water submersion requirements. This new Hydro-Switch has the same mechanical and electrical properties of our NX300 series switches with the added bonus of being watertight. It can be used as a direct drop-in replacement for designs utilizing current Amphenol NEXUS Technologies' switches.

Amphenol NEXUS Technologies manufactures a wide variety of push-pull and momentary switches for multiple markets and applications. Many of the switches can be incorporated with our connectors for customers who have come to rely on our design capabilities and prefer the tactile feel of our quality switches. The new Hydro-Switch has the same quality customers expect from an Amphenol NEXUS Technologies product.