Views from "X" rotated

6-Pole

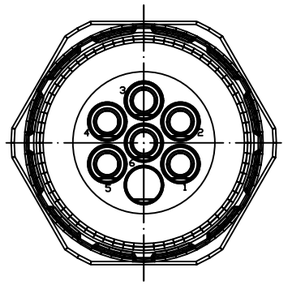

7-Pole

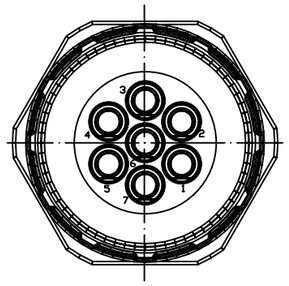

9-Pole
(8+1)

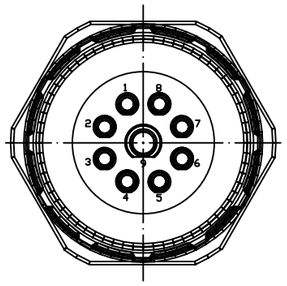

12-Pole

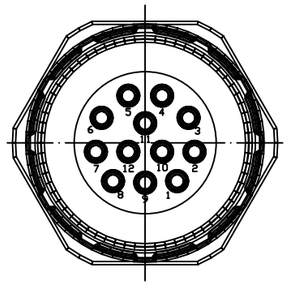

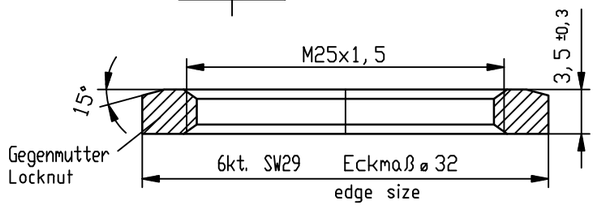

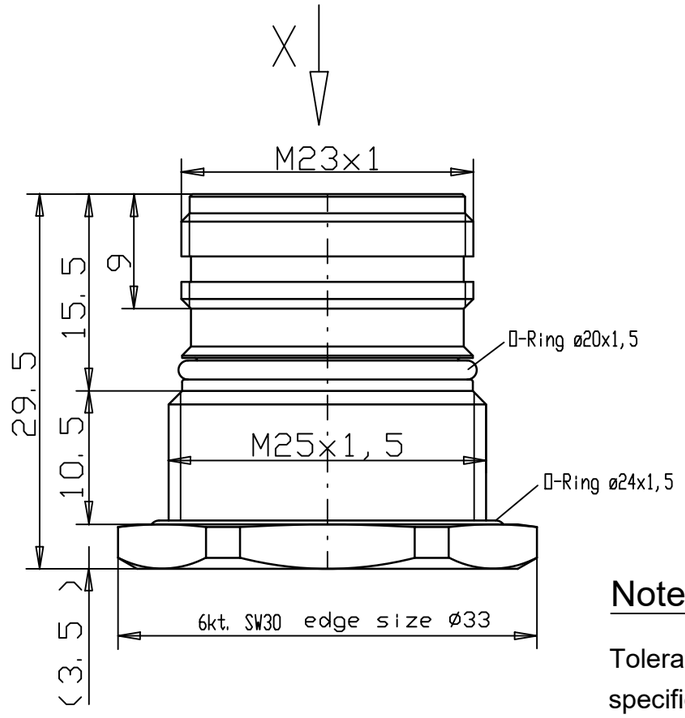

	Cable Diameter	Solder Contacts	Crimp Contacts
6 Pole		— — —	KRS6P46-400
			1202310094
	Crimp range*		0,75-2,5mm²
7 Pole		KRS7P46-550	KRS7P46-400
		1202310096	1202310098
	Crimp range*		0,75-2,5mm²
9 Pole (8+1)		KRS9P46-550	KRS9P46-410
		1202310100	1202310102
	Crimp range*		0,14-1,0mm²/0,75-2,5mm²
12 Pole		KRSCP46-550	KRSCP46-010
		1202310104	1202310106
	Crimp range*		0,14-1,0mm²

*Crimp range only applies to "Crimp Contacts" version

Notes:

Tolerances (unless specified): DIN ISO 2768m

THIS DRAWING CONTAINS INFORMATION THAT IS PROPRIETARY TO MOLEX ELECTRONIC TECHNOLOGIES, LLC AND SHOULD NOT BE USED WITHOUT WRITTEN PERMISSION

FUNCTIONAL SYMBOLS: FW=0, FC=0, FP=0

DIVISIONAL SYMBOLS

DIMENSION UNITS	SCALE
MM	NTS

GENERAL TOLERANCES (UNLESS SPECIFIED)

	mm	INCH
4 PLACES	±----	±----
3 PLACES	±----	±----
2 PLACES	±0.05	±----
1 PLACE	±0.1	±----
0 PLACES	±----	±----
ANGULAR TOL ±	---- °	

DRAFT WHERE APPLICABLE MUST REMAIN WITHIN DIMENSIONS

CURRENT REV DESC: REMOVED OBSOLETED PART NUMBERS AS PER PCN#512581.

EC NO: 753973
DRWN: LIKITV 2023/08/22
CHK'D: ANIKES1 2023/08/30
APPR: GGA 2023/08/31

INITIAL REVISION:
DRWN: BBRAUCH 2008/11/17
APPR: JKOLB 2009/03/02

THIRD ANGLE PROJECTION | DRAWING: A3-SIZE | SERIES: 120231

molex

REC M23 XP XC MA STR M25
BM UNSH BRA

PRODUCT CUSTOMER DRAWING

DOCUMENT NUMBER	DOC TYPE	DOC PART	REVISION
SD-120231-005	PSD	001	A

MATERIAL NUMBER	CUSTOMER	SHEET NUMBER
SEE TABLE	GENERAL MARKET	1 OF 1

DOCUMENT STATUS	P1	RELEASE DATE	2023/08/31 15:24:18

FORMAT: ACAD-lb-prod-A3
REVISION: C
DATE: 2022/10/04