REV.	DESCRIPTION	ECN NO.	NAME	DATE

General tolerances(mm)														
0 ~ 3	>3 ~ 6	>6 ~ 10	>10 ~ 18	>18 ~ 30	>30 ~ 50	>50 ~ 80	>80 ~ 120	>120 ~ 180	>180 ~ 250	>250 ~ 315	>315 ~ 400	>400 ~ 500	>500	0.1/10
±0.12	±0.18	±0.22	±0.26	±0.31	±0.37	±0.57	±0.80	±0.93	±1.05	±1.15	±1.60	±2.20	±2.50	±2°

Product model	PIN	A	B
JCB381-HGC2P	2	8.41	3.81
JCB381-HGC3P	3	12.22	7.62
JCB381-HGC4P	4	16.03	11.43
JCB381-HGC5P	5	19.84	15.24
JCB381-HGC6P	6	23.65	19.05
JCB381-HGC7P	7	27.46	22.86
.....	....	.....	....
JCB381-HGC24P	24	3.81xN+0.79	3.81x(N-1)

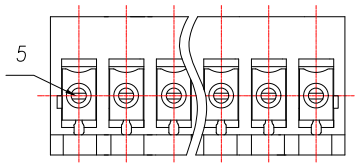

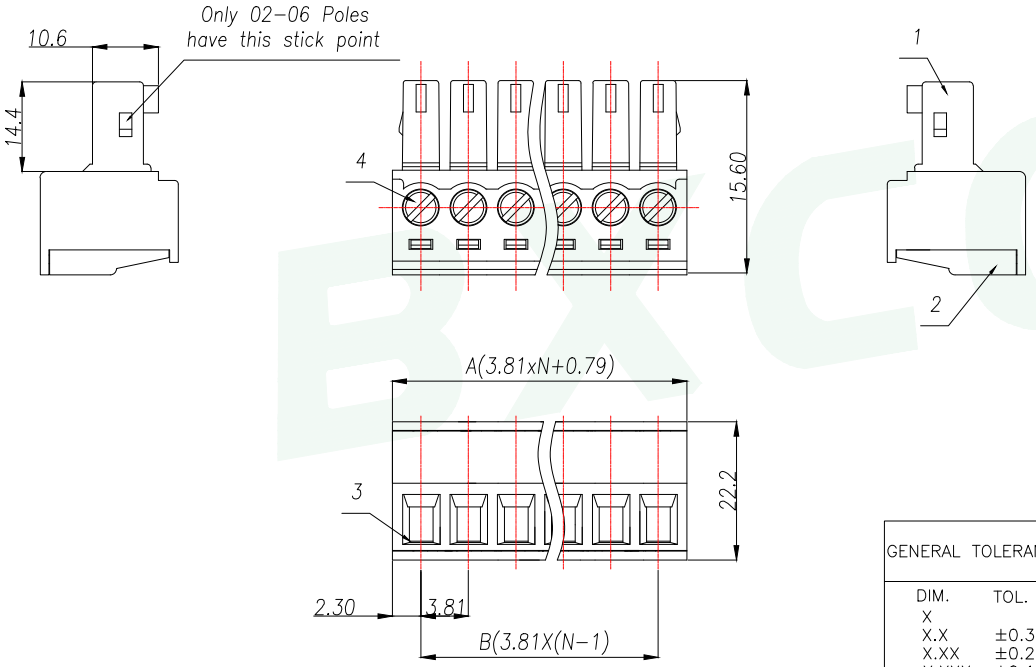

UL Standard	B	C	D
Rated Voltage(V)/Current(A)	300/8	/	300/8
IEC Standard			
Overvoltage Category/Pollution Degree	II /2		
Rated Voltage(V)/Current(A)	250/7		
Rate Impulse Voltage(KV)	2.5		
Torque Tightening(N·m/Lb.in)	M2, 0.2/1.77		
Wire Range(rigid and flexible)(mm^2/AWG)	0.5~1.5/28~16		
Pitch(mm)/Poles	3.81/N=02~24P		
Stripping length(mm)	6-7		
Operating temperature(°C)	-40C°~+105C°		
Conform to RoHS	Yes		

ITEM	NAME OF PART	MATERIAL	NOTES
5	Clamp	Copper Alloy	Sn Plated
4	Screw	Steel	M2/Zn Plated
3	Cage	Copper Alloy	M2/Ni Plated
2	Cover	PA66	UL94V-0
1	Housing	PA66	UL94V-0

GENERAL TOLERANCE

DIM.	TOL.
X	
X.X	±0.30
X.XX	±0.25
X.XXX	±0.15
GENERAL ANGLE:	±3°

DONGGUAN BAOXUN PRECISION TECHNOLOGY CO., LTD

BXCONN®

TITLE: Socket-type terminal

DWG. NO.: JCB381-HGCNP

DRAWN: MAX

PART NO.: JCB381-HGCNP

CHECKED: ELLA

UNIT:	SCALE:	SHEET:	DWG. SIZE:	LAYER:
mm	none	1of 1	A4	bxconn

APPROVED: WILL