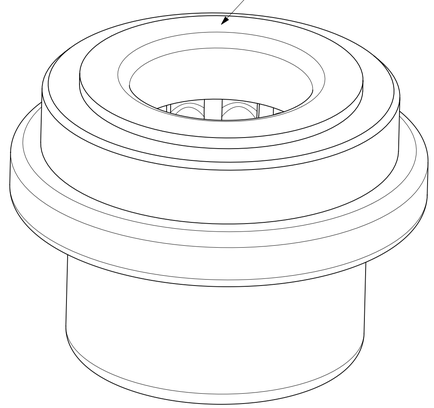

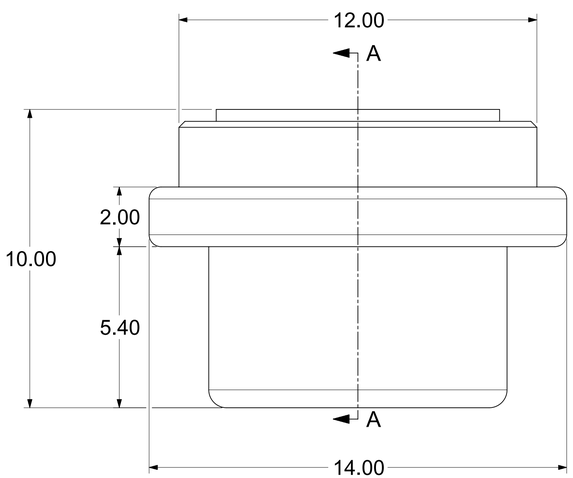

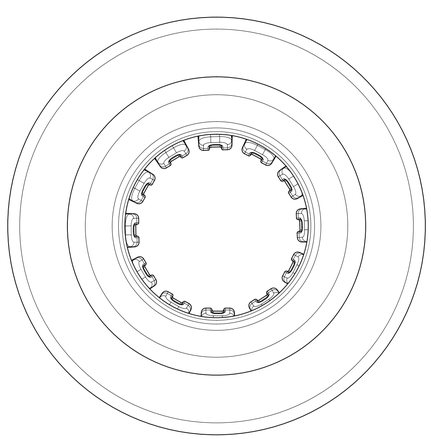

RECOMMENDED PCB LAYOUT

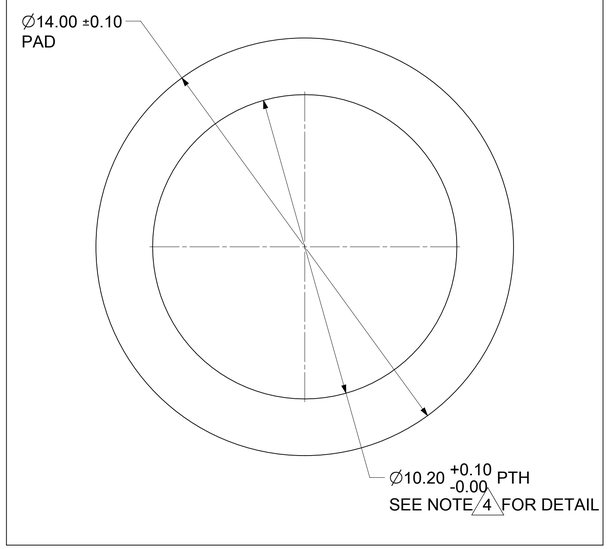

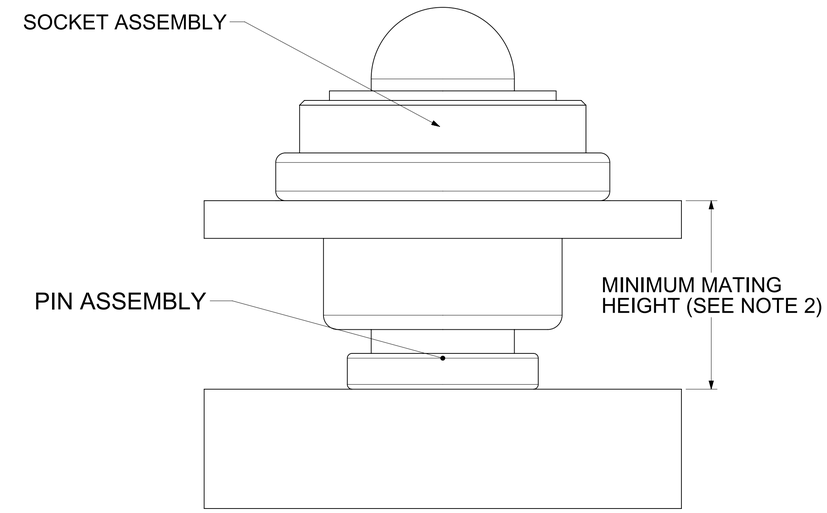

MATING PROFILE

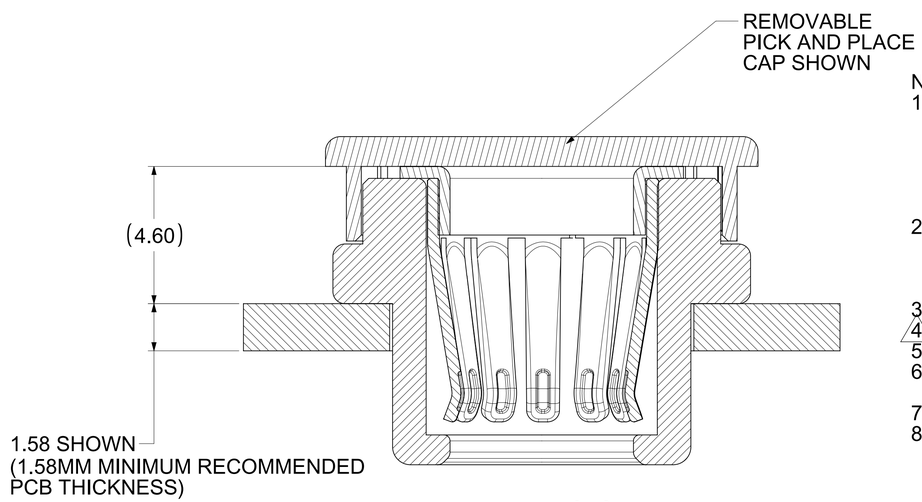

SECTION A-A

NOTES:
1MATERIALS:
RETENTION CAP: STAINLESS STEEL
PICK AND PLACE CAP: LCP UL94, V-0 COLOR BLACK
BASE METAL: HIGH CONDUCTIVE COPPER ALLOY
PLATING ON CONTACTS: 0.75 MICRON MIN GOLD OVER 1.27 MICRON MIN NICKEL
PLATING ON BODY: 3.18 MICRON MIN SILVER OVER 1.27 MICRON MIN NICKEL
2. MATES WITH THE STANDARD PIN DRAWINGS:
i. 6.0MM SMT DRAWING 2032630136-SD, MIN. MATING DISTANCE 6.4MM
ii. 6.0MM PRESS FIT DRAWING 2032630006-SD, MIN. MATING DISTANCE 6.15MM
iii. 6.0MM SCREW MOUNT DRAWING 2032636185-SD, MIN. MATING DISTANCE 9.2MM
3. PRODUCT SPECIFICATION: 2043130006-PS
4. APPLICATION SPECIFICATION: 2043130006-AS
5. PACKAGING SPECIFICATION: 2121940006-PK
6. SILVER COMPONENTS WILL BE SUPPLIED TARNISH FREE.
BUT MAY TARNISH OVER TIME
7. PICK AND PLACE CAP TO BE REMOVED AFTER SOLDERING.
8. DATE CODE TO BE LASER MARKED APPROXIMATELY WHERE SHOWN
USING DDDYY FORMAT

THIS DRAWING CONTAINS INFORMATION THAT IS PROPRIETARY TO MOLEX ELECTRONIC TECHNOLOGIES, LLC AND SHOULD NOT BE USED WITHOUT WRITTEN PERMISSION

DIMENSION UNITS	SCALE
mm	NTS

GENERAL TOLERANCES (UNLESS SPECIFIED)

ANGULAR TOL	±	0.5 °
4 PLACES	±	
3 PLACES	±	
2 PLACES	±	0.15
1 PLACE	±	0.25
0 PLACES	±	

DRAFT WHERE APPLICABLE MUST REMAIN WITHIN DIMENSIONS

CURRENT REV DESC: UPDATED THE TITLE BLOCK

EC NO: 730607
DRWN: SOURAJ 2022/11/30
CHK'D: GSHARMA 2022/12/08
APPR: HTHYAGARAJ 2022/12/14

INITIAL REVISION:
DRWN: RLOW 2020/03/10
APPR: BPISZCZOR 2020/06/10

molex

6.0MM SENTRALITY BOTTOM ENTRY SMT
STANDARD SOCKET IN T&R

PRODUCT CUSTOMER DRAWING

DOCUMENT NUMBER	DOC TYPE	DOC PART	REVISION
2121945006-SD	PSD	000	A3

THIRD ANGLE PROJECTION	DRAWING	SERIES	MATERIAL NUMBER	CUSTOMER	SHEET NUMBER
	D-SIZE	212194	2121945006	GENERAL MARKET	1 OF 1

DOCUMENT STATUS	P1	RELEASE DATE	2022/12/14	06:00:37