REV.	DESCRIPTION	ECN NO.	NAME	DATE

General tolerances(mm)														
0 ~ 3	>3 ~ 6	>6 ~ 10	>10 ~ 18	>18 ~ 30	>30 ~ 50	>50 ~ 80	>80 ~ 120	>120 ~ 180	>180 ~ 250	>250 ~ 315	>315 ~ 400	>400 ~ 500	>500	0.1/10
±0.12	±0.18	±0.22	±0.26	±0.31	±0.37	±0.57	±0.80	±0.93	±1.05	±1.15	±1.60	±2.20	±2.50	±2°

Product model	PIN	A	B
JCB508-HDGC2P	2	10.16	5.08
JCB508-HDGC3P	3	15.24	10.16
JCB508-HDGC4P	4	20.32	15.24
JCB508-HDGC5P	5	25.40	20.32
JCB508-HDGC6P	6	30.48	25.40
JCB508-HDGC7P	7	35.56	30.48
.....	....	.....	.....
JCB508-HDGC24P	24	5.08xN	5.08X(N-1)

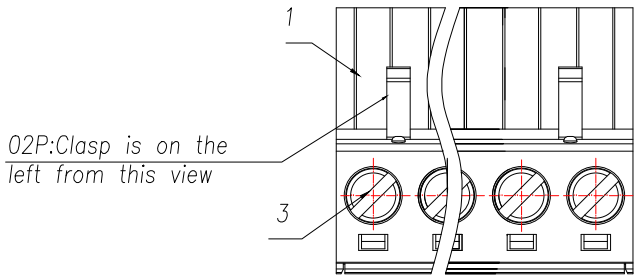

UL Standard	B	C	D
Rated Voltage(V)/Current(A)	300/15	/	300/10
IEC Standard			
Overvoltage Category/Pollution Degree	Ⅲ/2		
Rated Voltage(V)/Current(A)	320/20		
Rate Impulse Voltage(KV)	4.0		
Torque Tightening(N.m/Lb.in)	M3 0.5/4.43		
Wire Range(rigid and flexible)(mm²/AWG)	1.0~2.5/28~12		
Pitch(mm)/Poles	5.08/N=02~24P		
Stripping length(mm)	7-8		
Operating temperature(°C)	-40~+105		
Conform to RoHS	Yes		

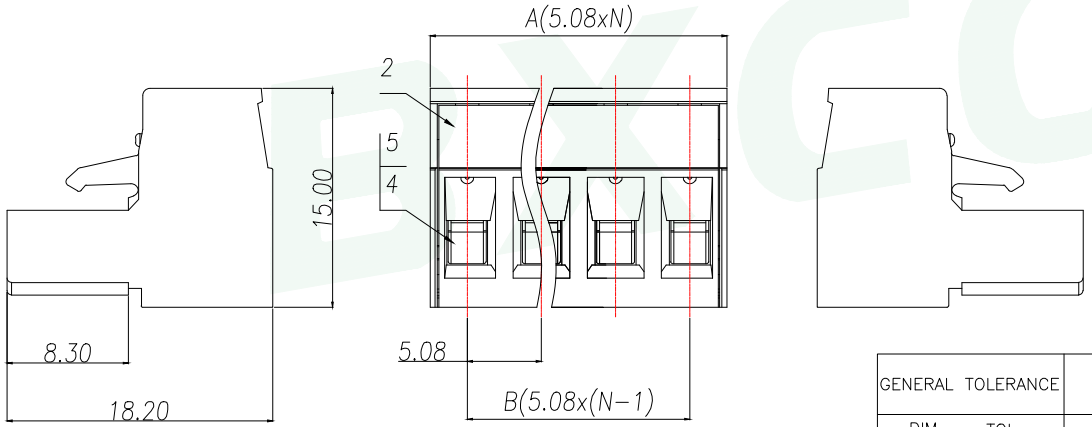

ITEM	NAME OF PART	MATERIAL	NOTES
5	Clamp	Copper alloy	Sn plated
4	Cage	Copper alloy	M3/Ni plated
3	Screw	Steel	M3/Ni plated
2	Cover	PA66	UL94V-0
1	Housing	PA66	UL94V-0

GENERAL TOLERANCE

DIM.	TOL.
X	
X.X	±0.30
X.XX	±0.25
X.XXX	±0.15
GENERAL ANGLE:	±3°

DONGGUAN BAOXUN PRECISION TECHNOLOGY CO., LTD

BXCONN®

TITLE: Socket-type terminal

DWG. NO.: JCB508-HDGCNP

DRAWN: MAX

PART NO.: JCB508-HDGCNP

CHECKED: ELLA

UNIT:	SCALE:	SHEET:	DWG. SIZE:	LAYER:
mm	none	1of 1	A4	bxconn

APPROVED: WILL