REV.	ECN NO.	DATE	SIGN	DESCRIPTION
B	LEN-890062	2008/09/05	Li Xiu Zhi	Change 18.0±0.25 To 18.5

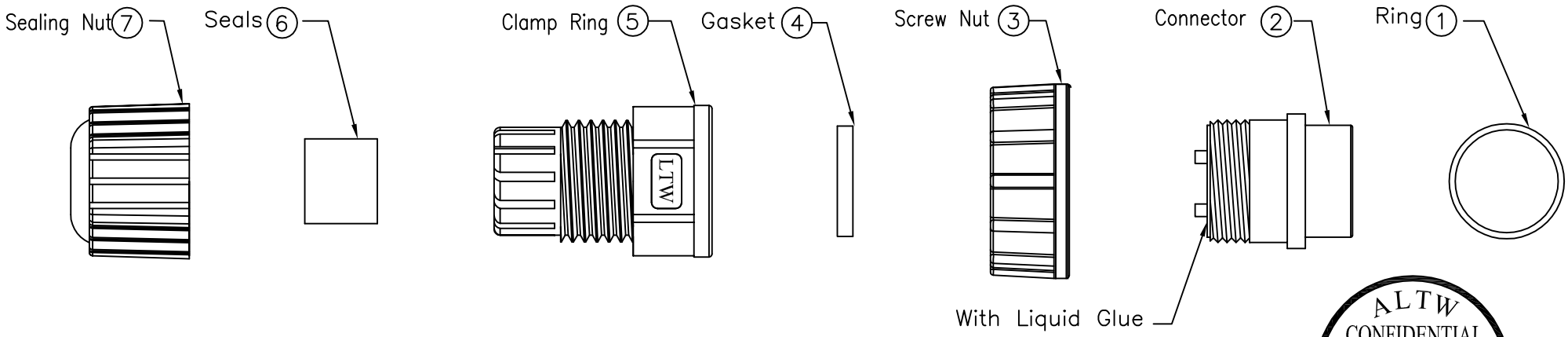

ALTW
CONFIDENTIAL
2008.09.05
R&D DEPT.

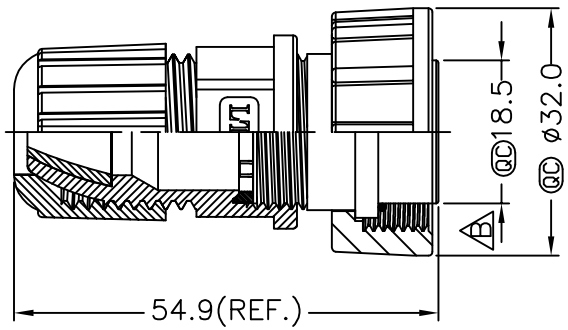

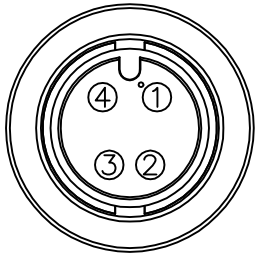

Pin Assignments
Front View

ALTW
DCC. DEPT.
CONFIDENTIAL
2008.09.22
ISSUED

Note:
* QC Important Dimension To Check.
* Waterproof Rate: IP67
* Housing:Nylon+GF
* Pin:Copper Alloy,Gold Plated
* Liquid Glue: Clear
* Ring: Black, EPDM
* Nut: Black, Nylon+GF
* Gasket:Black,Silicone
* Clamping Ring:Black,Nylon
* Seals:Black,EPDM
* Sealing Nut:Black,Nylon
* Seals for Cable OD:ø5.5m~ø10.8mm
* One Set Unassembled in One PE Bag

UNIT:mm	TITLE B Large Assy Screw 4Pin F Conn F Pin	Amphenol LTW 安費諾亮泰企業股份有限公司	ITEM NO DC-04BFFA-SL7001	DRAWN BY Li Xiu Zhi	DATE 2008/09/05
TOLERANCE B ±0.5mm	SCALE Free / SHEET 1 OF 1		DWG NO DC-04BFFA-SL7001	CHECKED BY Ling	DATE 2008/09/06
	REV. B / SIZE A4 / QC :Inspection Item		CUSTOMER ALTW	APPROVED BY Win	DATE 2008/09/06

THIS DOCUMENT IS SUBJECT TO CHANGE WITHOUT NOTICE. IT IS CONFIDENTIAL AND A PROPERTY OF Amphenol LTW. DISCLOSURE TO THIRD PARTY HAS TO BE AUTHORIZED BY Amphenol LTW.