PART NO.	BASE TYPE	DESIGN VOLTS	DESIGN AMPS	MSCP	FILIMANT TYPE	AVERAGE LIFE HOURS
E211–2	FESTOON CAPS	12.8	0.97 ±15%	12 ±20%	C–8	1000

REVISIONS			
REV	DESCRIPTION	DATE	APPROVED
1	ISSUED	12/05/2005	D.C.
2	REVISED DIMENSIONS	06/25/2008	D.C.

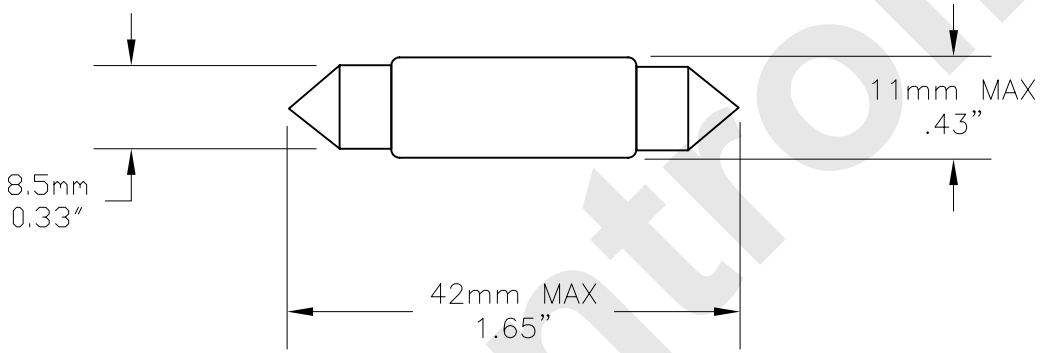

UNLESS OTHERWISE SPECIFIED:
DIMENSIONS ARE IN INCHES
TOLERANCES
DECIMALS .XX ± .05 .XXX ± .010
ANGULAR ± 0.5°
FRACTIONAL ±1/64

DRAWN D. C	DATE 12/05/2005
CHECKED	
DESIGN	
MATERIAL	

CEC INDUSTRIES LTD
599 BOND STREET LINCOLNSHIRE, IL 60069

TITLE
LIGHT BULB NO. E211–2

SIZE	FSCM NO.	DWG NO.	REV
A		E211–2	2

SCALE | PLOT SCALE | SHEET 1 OF 1

FILE E211–2.dwg

DO NOT SCALE DRAWING