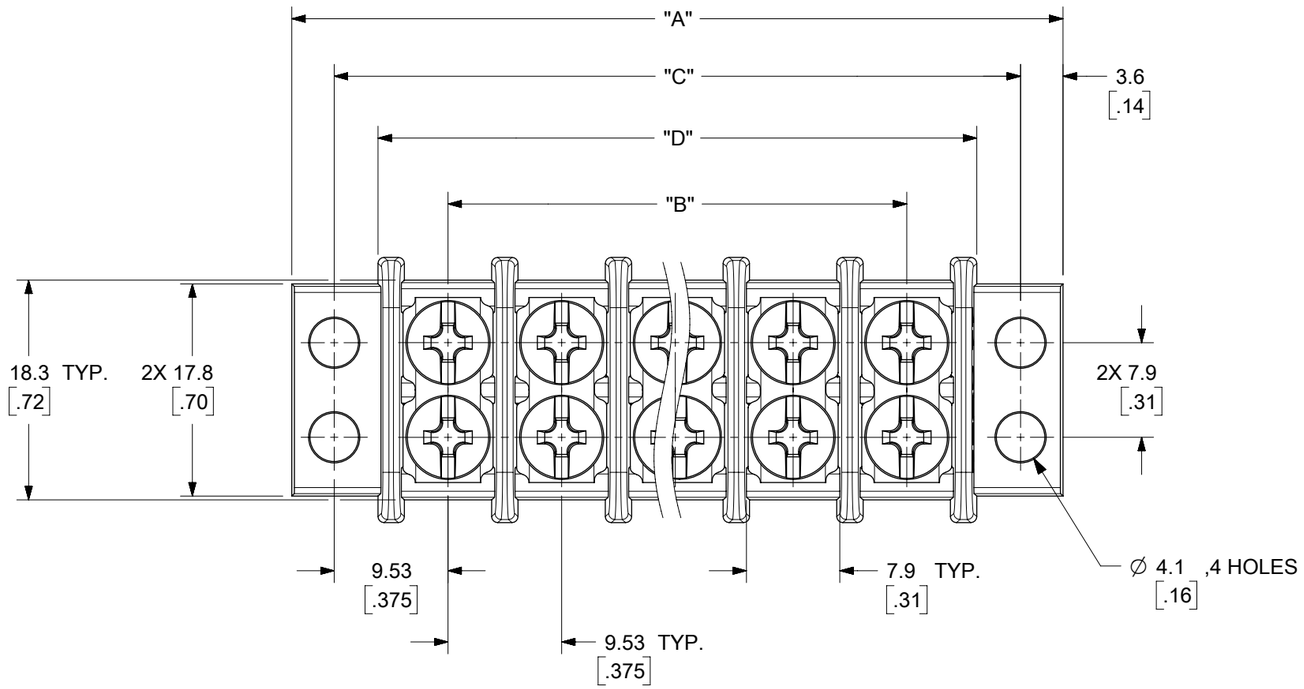


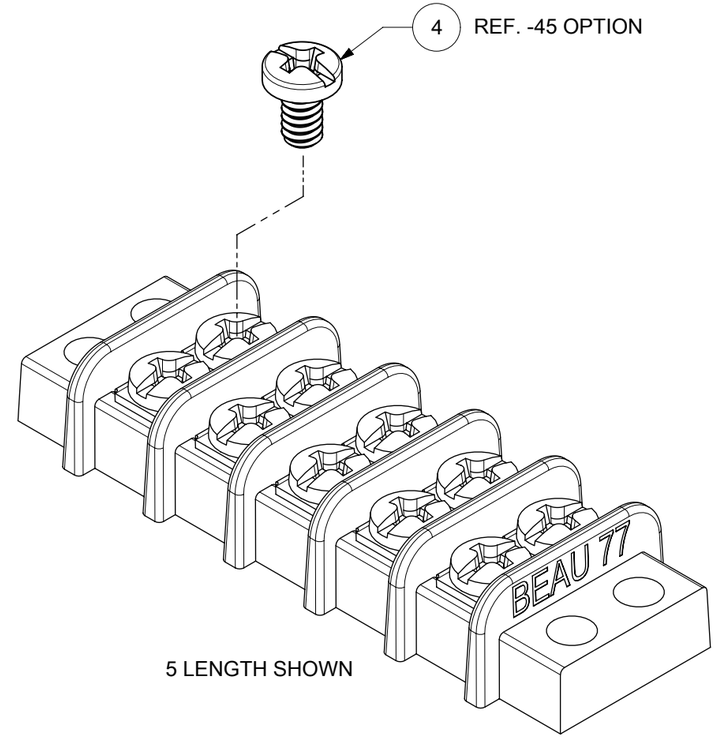


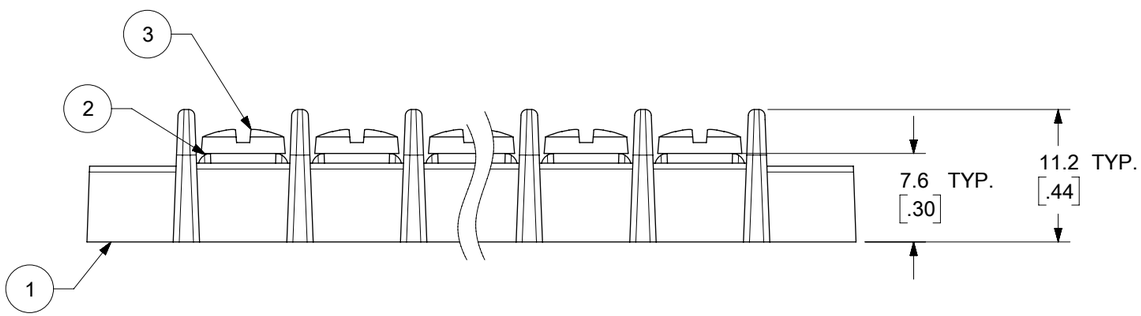


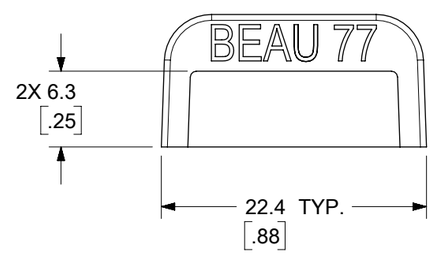


NOTES:

1. MATERIAL: SEE TABLE
2. FINISHES: SEE TABLE
3. PRODUCT SPECIFICATION: NOT REQUIRED
4. PACKAGING: NOT REQUIRED
5. MATES WITH: NONE
6. "XX" REFERS TO THE QUANTITY OF CIRCUITS.

| TOLERANCES | | | |
|---|---|---|---|
| MM | TOL | INCH | TOL |
| 0-6 | ±0.25 | 0-.24 | ±.010 |
| >6-30 | ±0.40 | .24-1.18 | ±.016 |
| >30-120 | ±0.50 | 1.18-4.76 | ±.020 |
| >120 | ±0.80 | >4.76 | ±.031 |

| ITEM | QTY. | DESCRIPTION | MATERIAL | FINISH |
|---|---|---|---|---|
| 4 | XX*2 | SCREW, #6-32X.250, BIND. HD., SLOTTED | STEEL | ZN, CLEAR CHROMATE |
| 3 | XX*2 | SCREW, #6-32X.250, BIND. HD., PHIL-SLOT | STEEL | ZN, CLEAR CHROMATE |
| 2 | XX | TERMINAL PLATE | BRASS | NICKEL |
| 1 | 1 | INSULATOR | THERMOPLASTIC | BLACK |

| DOCUMENT STATUS | P1 | RELEASE DATE | 2020/07/22 13:27:27 |
|---|---|---|---|

THIS DRAWING CONTAINS INFORMATION THAT IS PROPRIETARY TO MOLEX ELECTRONIC TECHNOLOGIES, LLC AND SHOULD NOT BE USED WITHOUT WRITTEN PERMISSION

FUNCTIONAL SYMBOLS: EA = 0, EC = 0, EP = 0

DIVISIONAL SYMBOLS

DIMENSION UNITS: MM/INCH
SCALE: 2:1

GENERAL TOLERANCES (UNLESS SPECIFIED)

| | MM | INCH |
|---|---|---|
| 4 PLACES | ± --- | ± --- |
| 3 PLACES | ± --- | ± SEE CHART |
| 2 PLACES | ± SEE CHART | ± SEE CHART |
| 1 PLACE | ± SEE CHART | ± --- |
| 0 PLACES | ± --- | ± --- |
| ANGULAR TOL | ± --- | |

DRAFT WHERE APPLICABLE MUST REMAIN WITHIN DIMENSIONS

CURRENT REV DESC: MIGRATED TO ECTR/NX & ADDED TOLERANCE TABLE

EC NO: 640874
DRWN: ABENJAMINLW 2020/05/15
CHK'D: MBRZOZOWSKI 2020/05/27
APPR: JFMURPHY 2020/07/22

INITIAL REVISION:
DRWN: CYORK 2004/09/27
APPR: grobertson 2004/10/01

THIRD ANGLE PROJECTION | DRAWING: B-SIZE | SERIES: 38770

molex

9.53 [.375] DOUBLE ROW
LOW PROFILE BTS ASSY

PRODUCT CUSTOMER DRAWING

| DOCUMENT NUMBER | DOC TYPE | DOC PART | REVISION |
|---|---|---|---|
| SD-38770-001 | PSD | 001 | C2 |

| MATERIAL NUMBER | CUSTOMER | SHEET NUMBER |
|---|---|---|
| SEE CHART | GENERAL MARKET | 1 OF 2 |

| NO. OF CIRCUITS "XX" | DIM. "A" | | DIM. "B" | | DIM. "C" | | DIM. "D" | | ASSEMBLY MATERIAL NO. (STD.) | ASSEMBLY MATERIAL NO. (-45 OPTION) |
|---|---|---|---|---|---|---|---|---|---|---|
| | mm | INCH | mm | INCH | mm | INCH | mm | INCH | | |
| 2 | 35.7 | [1.41] | 9.53 | [.375] | 28.6 | [1.13] | 21.3 | [.84] | 387700102 | 387790314 |
| 3 | 45.2 | [1.78] | 19.05 | [.750] | 38.1 | [1.50] | 30.8 | [1.21] | 387700103 | 387790316 |
| 4 | 54.7 | [2.16] | 28.58 | [1.125] | 47.6 | [1.88] | 40.3 | [1.59] | 387700104 | 387790318 |
| 5 | 64.3 | [2.53] | 38.10 | [1.500] | 57.2 | [2.25] | 49.8 | [1.96] | 387700105 | 387790320 |
| 6 | 73.8 | [2.91] | 47.63 | [1.875] | 66.7 | [2.63] | 59.4 | [2.34] | 387700106 | 387790323 |
| 7 | 83.3 | [3.28] | 57.15 | [2.250] | 76.2 | [3.00] | 68.9 | [2.71] | 387700107 | |
| 8 | 92.8 | [3.66] | 66.68 | [2.625] | 85.7 | [3.38] | 78.4 | [3.09] | 387700108 | 387790326 |
| 9 | 102.4 | [4.03] | 76.20 | [3.000] | 95.3 | [3.75] | 87.9 | [3.46] | 387700109 | 387790328 |
| 10 | 111.9 | [4.41] | 85.73 | [3.375] | 104.8 | [4.13] | 97.5 | [3.84] | 387700110 | |
| 11 | 121.4 | [4.78] | 95.25 | [3.750] | 114.3 | [4.50] | 107.0 | [4.21] | 387700111 | 387790331 |
| 12 | 130.9 | [5.16] | 104.78 | [4.125] | 123.8 | [4.88] | 116.5 | [4.59] | 387700112 | |
| 13 | 140.5 | [5.53] | 114.30 | [4.500] | 133.4 | [5.25] | 126.0 | [4.96] | 387700113 | |
| 14 | 150.0 | [5.91] | 123.83 | [4.875] | 142.9 | [5.63] | 135.6 | [5.34] | 387700114 | |
| 15 | 159.5 | [6.28] | 133.35 | [5.250] | 152.4 | [6.00] | 145.1 | [5.71] | 387700115 | |
| 16 | 169.0 | [6.66] | 142.88 | [5.625] | 161.9 | [6.38] | 154.6 | [6.09] | 387700116 | |
| 17 | 178.6 | [7.03] | 152.40 | [6.000] | 171.5 | [6.75] | 164.1 | [6.46] | 387700117 | |
| 18 | 188.1 | [7.41] | 161.93 | [6.375] | 181.0 | [7.13] | 173.7 | [6.84] | 387700118 | |
| 19 | 197.6 | [7.78] | 171.45 | [6.750] | 190.5 | [7.50] | 183.2 | [7.21] | 387700119 | |
| 20 | 207.1 | [8.16] | 180.98 | [7.125] | 200.0 | [7.88] | 192.7 | [7.59] | 387700120 | |
| 21 | 216.7 | [8.53] | 190.50 | [7.500] | 209.6 | [8.25] | 202.2 | [7.96] | 387700121 | |
| 22 | 226.2 | [8.91] | 200.03 | [7.875] | 219.1 | [8.63] | 211.8 | [8.34] | 387700122 | |
| 23 | 235.7 | [9.28] | 209.55 | [8.250] | 228.6 | [9.00] | 221.3 | [8.71] | 387700123 | |
| 24 | 245.2 | [9.66] | 219.08 | [8.625] | 238.1 | [9.38] | 230.8 | [9.09] | 387700124 | 387790335 |
| 25 | 254.2 | [10.03] | 228.60 | [9.000] | 247.7 | [9.75] | 240.3 | [9.46] | 387700125 | |
| 26 | 264.3 | [10.41] | 238.13 | [9.375] | 257.2 | [10.13] | 249.9 | [9.84] | 387700126 | |
| 27 | 273.8 | [10.78] | 247.65 | [9.750] | 266.7 | [10.50] | 259.4 | [10.21] | 387700127 | |
| 28 | 283.3 | [11.16] | 257.18 | [10.125] | 276.2 | [10.88] | 268.9 | [10.59] | 387700128 | |
| 29 | 292.9 | [11.53] | 266.70 | [10.500] | 285.8 | [11.25] | 278.4 | [10.96] | 387700129 | |
| 30 | 302.4 | [11.91] | 276.23 | [10.875] | 295.3 | [11.63] | 288.0 | [11.34] | 387700130 | |

| TOLERANCES | | | |
|---|---|---|---|
| MM | TOL | INCH | TOL |
| 0-6 | ±0.25 | 0-.24 | ±.010 |
| >6-30 | ±0.40 | .24-1.18 | ±.016 |
| >30-120 | ±0.50 | 1.18-4.76 | ±.020 |
| >120 | ±0.80 | >4.76 | ±.031 |

FUNCTIONAL SYMBOLS
E/A = 0
E/C = 0
E/P = 0
DIVISIONAL SYMBOLS

THIS DRAWING CONTAINS INFORMATION THAT IS PROPRIETARY TO MOLEX ELECTRONIC TECHNOLOGIES, LLC AND SHOULD NOT BE USED WITHOUT WRITTEN PERMISSION

DIMENSION UNITS: MM/INCH
SCALE: 2:1

GENERAL TOLERANCES (UNLESS SPECIFIED)

| | MM | INCH |
|---|---|---|
| 4 PLACES | ± --- | ± --- |
| 3 PLACES | ± --- | ± SEE CHART |
| 2 PLACES | ± SEE CHART | ± SEE CHART |
| 1 PLACE | ± SEE CHART | ± --- |
| 0 PLACES | ± --- | ± --- |
| ANGULAR TOL | ± --- | |

DRAFT WHERE APPLICABLE MUST REMAIN WITHIN DIMENSIONS

CURRENT REV DESC: MIGRATED TO ECTR/NX & ADDED TOLERANCE TABLE

EC NO: 640874
DRWN: ABENJAMINLW 2020/05/15
CHK'D: MBRZOZOWSKI 2020/05/27
APPR: JFMURPHY 2020/07/22

INITIAL REVISION:
DRWN: CYORK 2004/09/27
APPR: grobertson 2004/10/01

THIRD ANGLE PROJECTION | DRAWING: B-SIZE | SERIES: 38770

molex

9.53 [.375] DOUBLE ROW
LOW PROFILE BTS ASSY

PRODUCT CUSTOMER DRAWING

| DOCUMENT NUMBER | DOC TYPE | DOC PART | REVISION |
|---|---|---|---|
| SD-38770-001 | PSD | 001 | C2 |

| MATERIAL NUMBER | CUSTOMER | SHEET NUMBER |
|---|---|---|
| SEE CHART | GENERAL MARKET | 2 OF 2 |

| DOCUMENT STATUS | P1 | RELEASE DATE | 2020/07/22 13:27:27 |
|---|---|---|---|

FORMAT: Eng-legal-portrait-prod-B
REVISION: E
DATE: 2020/01/14

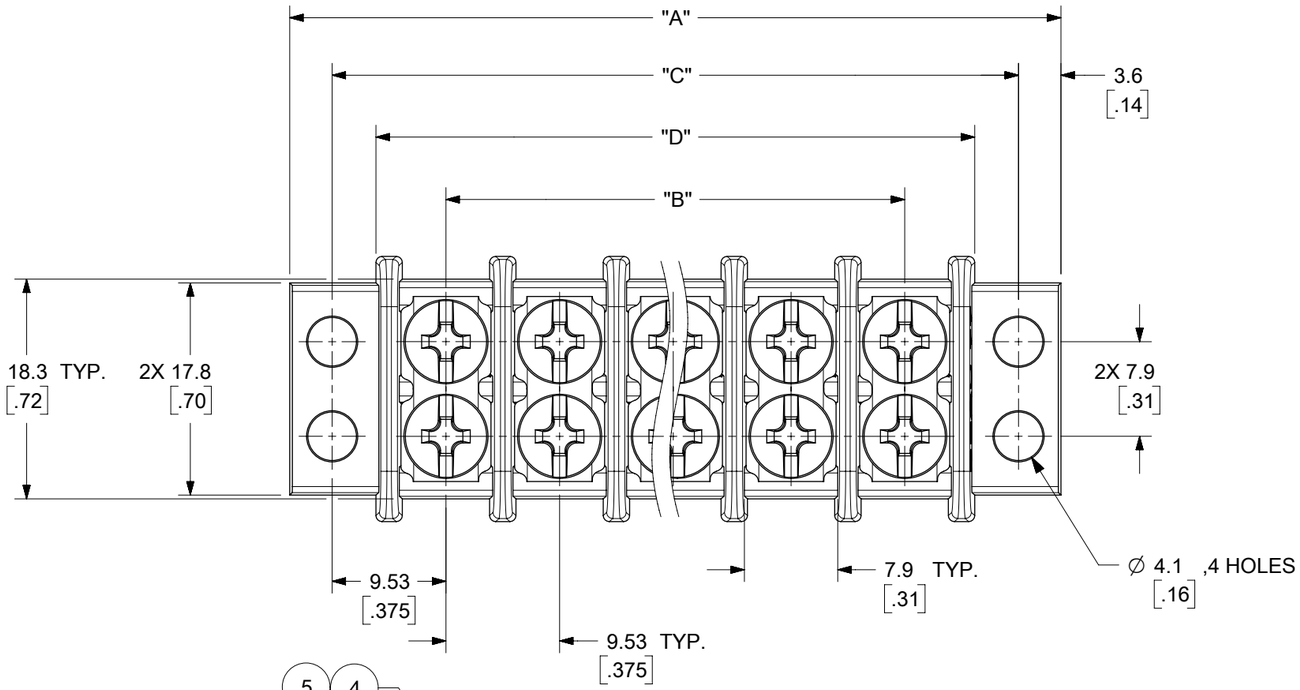


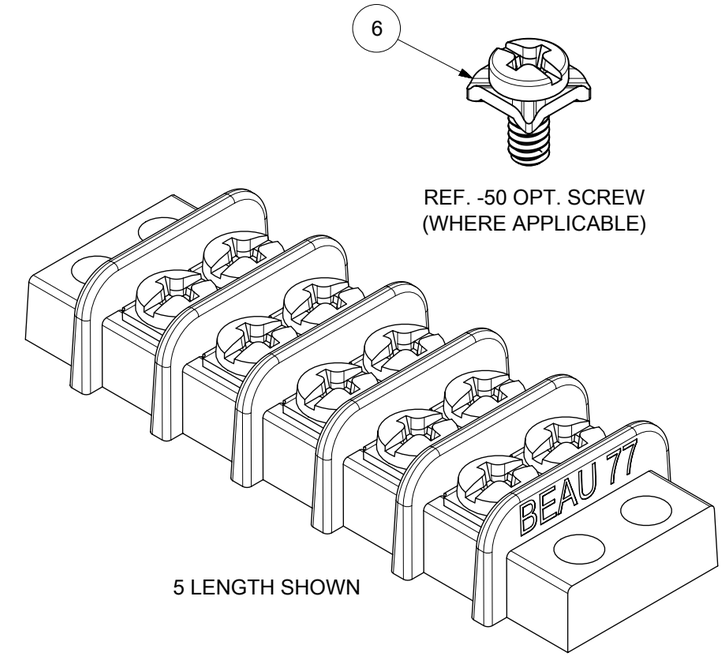


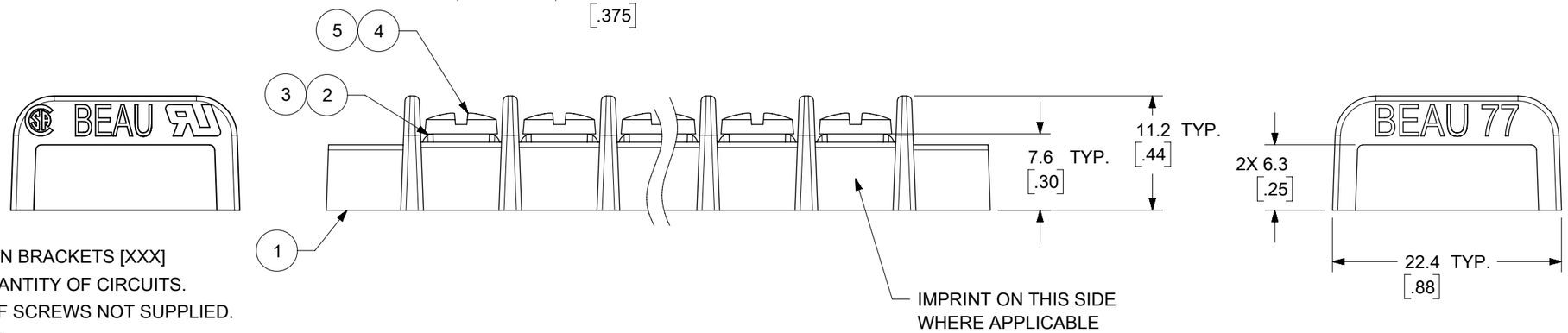


NOTES:

1. MATERIAL: SEE TABLE.
2. FINISHES: SEE TABLE.
3. INCH DIMS ARE SHOWN IN BRACKETS [XXX]
4. "XX" REFERS TO THE QUANTITY OF CIRCUITS.
5. -61 OPTION: ONE ROW OF SCREWS NOT SUPPLIED. SCREW QUANTITY = "XX".
6. -49 OPTION: USE ITEM 3 TERMINAL PLATE, ALL OTHERS USE ITEM 2.
7. -58 OPTION: NO SCREWS SUPPLIED.
8. FOR IMPRINTING (-10A OPTION) SEE SD-38120-001.
9. ALL COMPONENTS ARE ROHS COMPLIANT.

| TOLERANCES | | | |
|---|---|---|---|
| MM | TOL | INCH | TOL |
| 0-6 | ±0.25 | 0-.24 | ±.010 |
| >6-30 | ±0.40 | .24-1.18 | ±.016 |
| >30-120 | ±0.50 | 1.18-4.76 | ±.020 |
| >120 | ±0.80 | >4.76 | ±.031 |

| ITEM | QTY. | DESCRIPTION | MATERIAL | FINISH |
|---|---|---|---|---|
| 6 | XX*2 | SCREW&WASHER, #6-32X.250, PAN, PHIL-SLOT (-50) | STEEL | ZINC W/CHROMATE |
| 5 | XX*2 | SCREW, #6-32X.250, BHD, PHIL-SLOT (-49) | BRASS | NICKEL PLATE |
| 4 | XX*2 | SCREW, #6-32X.250, BHD, PHIL-SLOT (STD &-61) | STEEL | ZINC W/CHROMATE |
| 3 | XX | TERMINAL PLATE, TIN PLATED (SEE NOTE 6) | BRASS | TIN PLATE |
| 2 | XX | TERMINAL PLATE, NICKEL PLATED | BRASS | NICKEL PLATE |
| 1 | 1 | INSULATOR | PBT | BLACK |

| DOCUMENT STATUS | P1 | RELEASE DATE | 2023/03/08 16:05:23 |
|---|---|---|---|

FUNCTIONAL SYMBOLS: EA = 0, EC = 0, EP = 0

DIVISIONAL SYMBOLS

THIS DRAWING CONTAINS INFORMATION THAT IS PROPRIETARY TO MOLEX ELECTRONIC TECHNOLOGIES, LLC AND SHOULD NOT BE USED WITHOUT WRITTEN PERMISSION

DIMENSION UNITS: MM/INCH
SCALE: 2:1

GENERAL TOLERANCES (UNLESS SPECIFIED)

| | MM | INCH |
|---|---|---|
| 4 PLACES | ± --- | ± --- |
| 3 PLACES | ± --- | ± SEE CHART |
| 2 PLACES | ± SEE CHART | ± SEE CHART |
| 1 PLACE | ± SEE CHART | ± --- |
| 0 PLACES | ± --- | ± --- |
| ANGULAR TOL | ± --- | |

DRAFT WHERE APPLICABLE MUST REMAIN WITHIN DIMENSIONS

CURRENT REV DESC: MIGRATED TO ECTR/NX. ADDED THE OPPOSITE END PRODUCT VIEW WITH GRAPHICS.REMOVED OBSOLETED PNS AS PER PCN #512245

EC NO: 741427
DRWN: ABENJAMINLW 2021/07/23
CHK'D: DACHAMMER 2023/03/07
APPR: JFMURPHY 2023/03/08

INITIAL REVISION:
DRWN: CYORK 2006/08/30
APPR: JMACNEIL 2006/08/31

THIRD ANGLE PROJECTION

DRAWING: B-SIZE
SERIES: 38770

molex

9.53 [.375] DOUBLE ROW
LOW PROFILE BTS ASSY

PRODUCT CUSTOMER DRAWING

| DOCUMENT NUMBER | DOC TYPE | DOC PART | REVISION |
|---|---|---|---|
| SD-38770-004 | PSD | 001 | B2 |

| MATERIAL NUMBER | CUSTOMER | SHEET NUMBER |
|---|---|---|
| SEE SHEET-2 | GENERAL MARKET | 1 OF 2 |

| NO. OF CIRCUITS "XX" | DIM. "A" mm | DIM. "A" INCH | DIM. "B" mm | DIM. "B" INCH | DIM. "C" mm | DIM. "C" INCH | DIM. "D" mm | DIM. "D" INCH | ASSEMBLY MATERIAL NO. (STANDARD) | ASSEMBLY MATERIAL NO. (-49 OPTION) | ASSEMBLY MATERIAL NO. (-50 OPTION) | ASSEMBLY MATERIAL NO. (-58 OPTION) | ASSEMBLY MATERIAL NO. (-10A OPTION) | ASSEMBLY MATERIAL NO. (-61 OPTION) |
|---|---|---|---|---|---|---|---|---|---|---|---|---|---|---|
| 2 | 35.7 | [1.41] | 9.53 | [.375] | 28.58 | [1.125] | 21.3 | [.84] | 387700102 | 387700202 | 387700302 | 387700402 | --- | --- |
| 3 | 45.2 | [1.78] | 19.05 | [.750] | 38.10 | [1.500] | 30.8 | [1.21] | 387700103 | 387700203 | 387700303 | 387700403 | 387700503 | 387700603 |
| 4 | 54.7 | [2.16] | 28.58 | [1.125] | 47.63 | [1.875] | 40.3 | [1.59] | 387700104 | --- | 387700304 | 387700404 | 387700504 | --- |
| 5 | 64.3 | [2.53] | 38.10 | [1.500] | 57.15 | [2.250] | 49.8 | [1.96] | 387700105 | 387700205 | 387700305 | 387700405 | 387700505 | --- |
| 6 | 73.8 | [2.91] | 47.63 | [1.875] | 66.68 | [2.625] | 59.4 | [2.34] | 387700106 | 387700206 | 387700306 | 387700406 | 387700506 | --- |
| 7 | 83.3 | [3.28] | 57.15 | [2.250] | 76.20 | [3.000] | 68.9 | [2.71] | 387700107 | 387700207 | 387700307 | 387700407 | --- | --- |
| 8 | 92.8 | [3.66] | 66.68 | [2.625] | 85.73 | [3.375] | 78.4 | [3.09] | 387700108 | --- | 387700308 | 387700408 | 387700508 | 387700608 |
| 9 | 102.4 | [4.03] | 76.20 | [3.000] | 95.25 | [3.750] | 87.9 | [3.46] | 387700109 | 387700209 | 387700309 | 387700409 | --- | 387700609 |
| 10 | 111.9 | [4.41] | 85.73 | [3.375] | 104.78 | [4.125] | 97.5 | [3.84] | 387700110 | --- | 387700310 | --- | --- | --- |
| 11 | 121.4 | [4.78] | 95.25 | [3.750] | 114.30 | [4.500] | 107.0 | [4.21] | 387700111 | --- | --- | 387700411 | 387700511 | 387700611 |
| 12 | 130.9 | [5.16] | 104.78 | [4.125] | 123.83 | [4.875] | 116.5 | [4.59] | 387700112 | 387700212 | 387700312 | 387700412 | --- | 387700612 |
| 13 | 140.5 | [5.53] | 114.30 | [4.500] | 133.35 | [5.250] | 126.0 | [4.96] | 387700113 | --- | --- | 387700413 | 387700513 | 387700613 |
| 14 | 150.0 | [5.91] | 123.83 | [4.875] | 142.88 | [5.625] | 135.6 | [5.34] | 387700114 | --- | 387700314 | 387700414 | --- | 387700614 |
| 15 | 159.5 | [6.28] | 133.35 | [5.250] | 152.40 | [6.000] | 145.1 | [5.71] | 387700115 | --- | --- | --- | 387700515 | 387700615 |
| 16 | 169.0 | [6.66] | 142.88 | [5.625] | 161.93 | [6.375] | 154.6 | [6.09] | 387700116 | --- | 387700316 | --- | --- | 387700616 |
| 17 | 178.6 | [7.03] | 152.40 | [6.000] | 171.45 | [6.750] | 164.1 | [6.46] | --- | --- | --- | --- | 387700517 | 387700617 |
| 18 | 188.1 | [7.41] | 161.93 | [6.375] | 180.98 | [7.125] | 173.7 | [6.84] | 387700118 | --- | --- | --- | --- | 387700618 |
| 19 | 197.6 | [7.78] | 171.45 | [6.750] | 190.50 | [7.500] | 183.2 | [7.21] | --- | --- | --- | --- | 387700519 | 387700619 |
| 20 | 207.1 | [8.16] | 180.98 | [7.125] | 200.03 | [7.875] | 192.7 | [7.59] | 387700120 | --- | 387700320 | --- | --- | 387700620 |
| 21 | 216.7 | [8.53] | 190.50 | [7.500] | 209.55 | [8.250] | 202.2 | [7.96] | --- | --- | --- | --- | 387700521 | 387700621 |
| 22 | 226.2 | [8.91] | 200.03 | [7.875] | 219.08 | [8.625] | 211.8 | [8.34] | 387700122 | --- | --- | --- | 387700522 | 387700622 |
| 23 | 235.7 | [9.28] | 209.55 | [8.250] | 228.60 | [9.000] | 221.3 | [8.71] | --- | --- | --- | --- | 387700523 | 387700623 |
| 24 | 245.2 | [9.66] | 219.08 | [8.625] | 238.13 | [9.375] | 230.8 | [9.09] | 387700124 | --- | --- | --- | 387700524 | 387700624 |
| 25 | 254.2 | [10.03] | 228.60 | [9.000] | 247.65 | [9.750] | 240.3 | [9.46] | --- | --- | --- | --- | 387700525 | 387700625 |
| 26 | 264.3 | [10.41] | 238.13 | [9.375] | 257.18 | [10.125] | 249.9 | [9.84] | --- | --- | --- | --- | 387700526 | 387700626 |
| 27 | 273.8 | [10.78] | 247.65 | [9.750] | 266.70 | [10.500] | 259.4 | [10.21] | --- | --- | --- | --- | 387700527 | 387700627 |
| 28 | 283.3 | [11.16] | 257.18 | [10.125] | 276.23 | [10.875] | 268.9 | [10.59] | --- | --- | --- | --- | --- | 387700628 |
| 29 | 292.9 | [11.53] | 266.70 | [10.500] | 285.75 | [11.250] | 278.4 | [10.96] | --- | --- | --- | --- | 387700529 | 387700629 |
| 30 | 302.4 | [11.91] | 276.23 | [10.875] | 295.28 | [11.625] | 288.0 | [11.34] | 387700130 | --- | 387700330 | --- | --- | 387700630 |

| TOLERANCES | | | |
|---|---|---|---|
| MM | TOL | INCH | TOL |
| 0-6 | ±0.25 | 0-.24 | ±.010 |
| >6-30 | ±0.40 | .24-1.18 | ±.016 |
| >30-120 | ±0.50 | 1.18-4.76 | ±.020 |
| >120 | ±0.80 | >4.76 | ±.031 |

FUNCTIONAL SYMBOLS: E/A = 0; E/C = 0; E/P = 0

DIVISIONAL SYMBOLS

THIS DRAWING CONTAINS INFORMATION THAT IS PROPRIETARY TO MOLEX ELECTRONIC TECHNOLOGIES, LLC AND SHOULD NOT BE USED WITHOUT WRITTEN PERMISSION

DIMENSION UNITS: MM/INCH
SCALE: 2:1

GENERAL TOLERANCES (UNLESS SPECIFIED)

| | MM | INCH |
|---|---|---|
| 4 PLACES | ± --- | ± --- |
| 3 PLACES | ± --- | ± SEE CHART |
| 2 PLACES | ± SEE CHART | ± SEE CHART |
| 1 PLACE | ± SEE CHART | ± --- |
| 0 PLACES | ± --- | ± --- |
| ANGULAR TOL | ± --- | |

DRAFT WHERE APPLICABLE MUST REMAIN WITHIN DIMENSIONS

CURRENT REV DESC: MIGRATED TO ECTR/NX. ADDED THE OPPOSITE END PRODUCT VIEW WITH GRAPHICS.REMOVED OBSOLETED PNS AS PER PCN #512245

EC NO: 741427
DRWN: ABENJAMINLW 2021/07/23
CHK'D: DACHAMMER 2023/03/07
APPR: JFMURPHY 2023/03/08

INITIAL REVISION:
DRWN: CYORK 2006/08/30
APPR: JMACNEIL 2006/08/31

THIRD ANGLE PROJECTION | DRAWING: B-SIZE | SERIES: 38770

molex

9.53 [.375] DOUBLE ROW
LOW PROFILE BTS ASSY

PRODUCT CUSTOMER DRAWING

| DOCUMENT NUMBER | DOC TYPE | DOC PART | REVISION |
|---|---|---|---|
| SD-38770-004 | PSD | 001 | B2 |

| MATERIAL NUMBER | CUSTOMER | SHEET NUMBER |
|---|---|---|
| SEE CHART | GENERAL MARKET | 2 OF 2 |

| DOCUMENT STATUS | P1 | RELEASE DATE | 2023/03/08 16:05:23 |
|---|---|---|---|

FORMAT: Eng-lega-portrait-prod-B
REVISION: E
DATE: 2020/01/14