SAMZO | REAC/ROHS

REV	ECN NO	DESRIPTION	DESIGN	APPROVAL	DATE
A1	NEW	Replace frame			2018.06.12

Technical parameters
→Impedance:50 Ohms
→Frequency Range:DC~3G
→VSWR:1.3MAX
→Working Voltage:500V rms @ sea level
→Insulation Resistance:5000 Ohms min Temperature Range:-65 TO +165
→Relative Temperature:≤95%(40°C±2°C)
→Drawings products are in line with ROHS standards

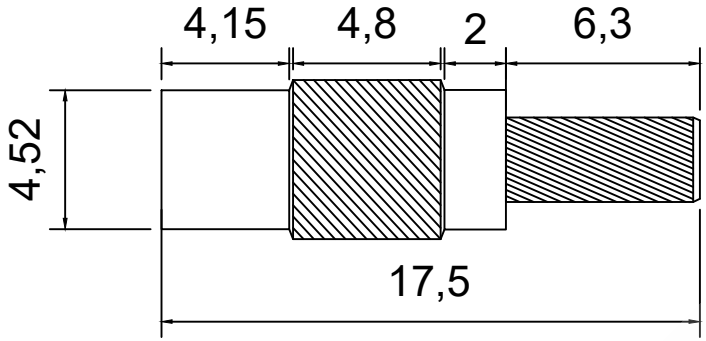

MCX K 175 L0 0

- Surface treatment镀层:镀金
- Way方式:L-正接
- Length体长:17.5mm
- Product number编号:K-1.5
- Product series系列:MCX同轴射频天线座

套管插件配件

ITEM	DESCRIPTION	MATERIAL	QTY	FINSH/COLOR					
C	插孔	HPB59-1	1	------				GENERAL TOLERANCE	
B	绝缘体	聚四氟乙烯	1	------				≥0~2<	±0.15
A	主体	黄铜	1	镀金	DESIGN	WANGGUIFA	2018.06.12	≥2~5<	±0.25
					CHECKED	ZHENGUILAN	2018.06.12	≥0~2<	±0.15
					APPROVED	LILIANJIANG	2018.06.14	≥5	±0.35

FIRST VIEW

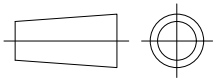

SCALE 1:1 UNIT mm

The copyright belongs to samzo parts [China] Co., Ltd. please use the material after samzo parts agree to authorize. The final right of interpretation belongs to samzo parts.
WWW.KKK-JP.COM

SAMZO COMPONENTS
Electronic switch and connector manufacturer

TITLE:: MCX-K-1.5 L=17.5MM
DWG NO: MCXK175-P00132
PART NO: MCXK175-230312
MODEL NO: MCX-K-175-L0-0
NAME: MCX COAXIAL RF CONNECTOR