SAMZO | REAC/ROHS

REV	ECN NO	DESRIPTION	DESIGN	APPROVAL	DATE
A1	NEW	Replace frame			2020.06.12

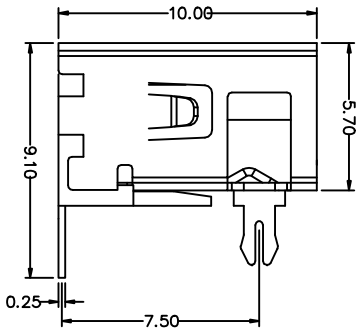

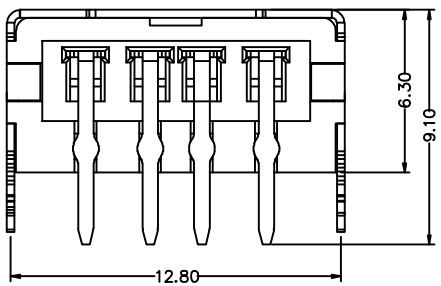

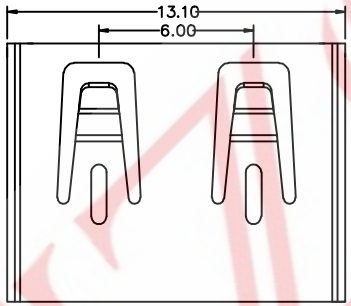

规格说明:Specifications:

电气特性:Electrical:

1.额定电流: Current Rating
1.5A/contact terminal

2.额定电压: Voltage Rating
30V DC

3.接触阻抗:Contact Resistance
30 milliohms MAX

4.耐电压:Dielectnic Withstanding Voitage:
500 V AC AT Sea Levol

5.绝缘阻抗:Lnsulation Resistance:
1000MEGA ohms MIN

物理性能:Mechanical:

1.插拔力: Cnnector Mate and Unmate Force
Mate force:3.57kgf(MAX)
Unmate force:1.02kgf(MIN)

2.端子保持力: Terminal Retenion
1.0kgf(MIN)

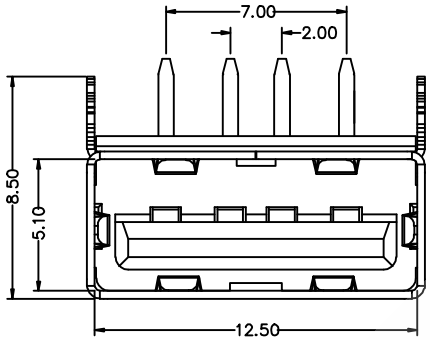

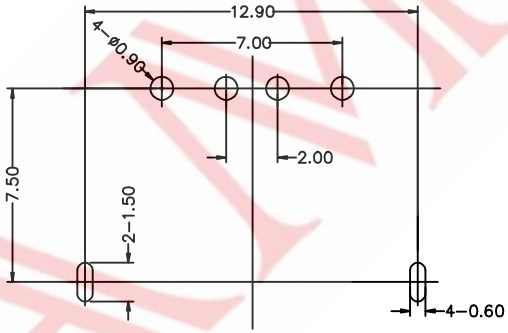

RECOMMENDED P.C.B LAYOUT

UE C J A T E A N Y

- Code: Y01.
- Interface: Borderless.
- Lifetime: 3,000 cycles.
- Material: Iron plated with nickel.
- Type: Without pillar.
- Appearance size: 10mm.
- Mounting method: Two-pronged fishhook.
- Specification: 5 pins.
- Series: AF2.0 USB.

ITEM	DESCRIPTION	MATERIAL	QTY	FINSH/COLOR					
C	塑胶	LCP	1	白 色	DESIGN	WANGGUIFA	2020.06.12		
B	端子	C2680	1	镀 金	CHECKED	ZHENGUILAN	2020.06.12		
A	外壳	C2680/SPCC	1	镀 镍	APPROVED	LILIANJIANG	2020.06.14		

GENERAL TOLERANCE	
≥0~2<	±0.15
≥2~5<	±0.25
≥0~2<	±0.15
≥5	±0.35

FIRST VIEW

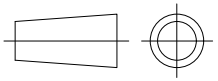

SCALE	1:1	UNIT	mm

The copyright belongs to samzo parts [China] Co., Ltd. please use the material after samzo parts agree to authorize. The final right of interpretation belongs to samzo parts.
WWW.KKK-JP.COM

SAMZO COMPONENTS
Electronic switch and connector manufacturer

TITLE:: AF2.0短体10.0mm 鱼叉前两脚 后插板 无耳无边

DWG NO: UECJA-P01009

PART NO: UECJA1093362

MODEL NO: UECJATEANY

NAME: AF2.0 USB CONN