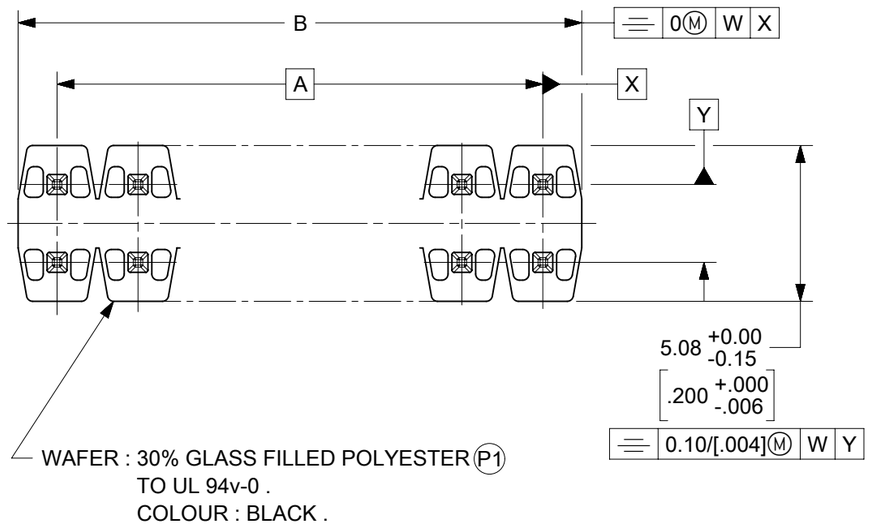

CKT SIZE	DIM . "A"		DIM."B" +0/-0.20 [+0/-.008]		CKT SIZE	DIM."A"		DIM."B +0/-0.20 [+0/-.008]	
2X 1	----------		2.54	[.100]	2X 21	50.80	[2.000]	53.34	[2.100]
2X 2	2.54	[.100]	5.08	[.200]	2X 22	53.34	[2.100]	55.88	[2.200]
2X 3	5.08	[.200]	7.62	[.300]	2X 23	55.88	[2.200]	58.42	[2.300]
2X 4	7.62	[.300]	10.16	[.400]	2X 24	58.42	[2.300]	60.96	[2.400]
2X 5	10.16	[.400]	12.70	[.500]	2X 25	60.96	[2.400]	63.50	[2.500]
2X 6	12.70	[.500]	15.24	[.600]	2X 26	63.50	[2.500]	66.04	[2.600]
2X 7	15.24	[.600]	17.78	[.700]	2X 27	66.04	[2.600]	68.58	[2.700]
2X 8	17.78	[.700]	20.32	[.800]	2X 28	68.58	[2.700]	71.12	[2.800]
2X 9	20.32	[.800]	22.86	[.900]	2X 29	71.12	[2.800]	73.66	[2.900]
2X 10	22.86	[.900]	25.40	[1.000]	2X 30	73.66	[2.900]	76.20	[3.000]
2X 11	25.40	[1.000]	27.94	[1.100]	2X 31	76.20	[3.000]	78.74	[3.100]
2X 12	27.94	[1.100]	30.48	[1.200]	2X 32	78.74	[3.100]	81.28	[3.200]
2X 13	30.48	[1.200]	33.02	[1.300]	2X 33	81.28	[3.200]	83.82	[3.300]
2X 14	33.02	[1.300]	35.56	[1.400]	2X 34	83.82	[3.300]	86.36	[3.400]
2X 15	35.56	[1.400]	38.10	[1.500]	2X 35	86.36	[3.400]	88.90	[3.500]
2X 16	38.10	[1.500]	40.64	[1.600]	2X 36	88.90	[3.500]	91.44	[3.600]
2X 17	40.64	[1.600]	43.18	[1.700]	2X 37	91.44	[3.600]	93.98	[3.700]
2X 18	43.18	[1.700]	45.72	[1.800]	2X 38	93.98	[3.700]	96.52	[3.800]
2X 19	45.72	[1.800]	48.26	[1.900]	2X 39	96.52	[3.800]	99.06	[3.900]
2X 20	48.26	[1.900]	50.80	[2.000]	2X 40	99.06	[3.900]	101.60	[4.000]

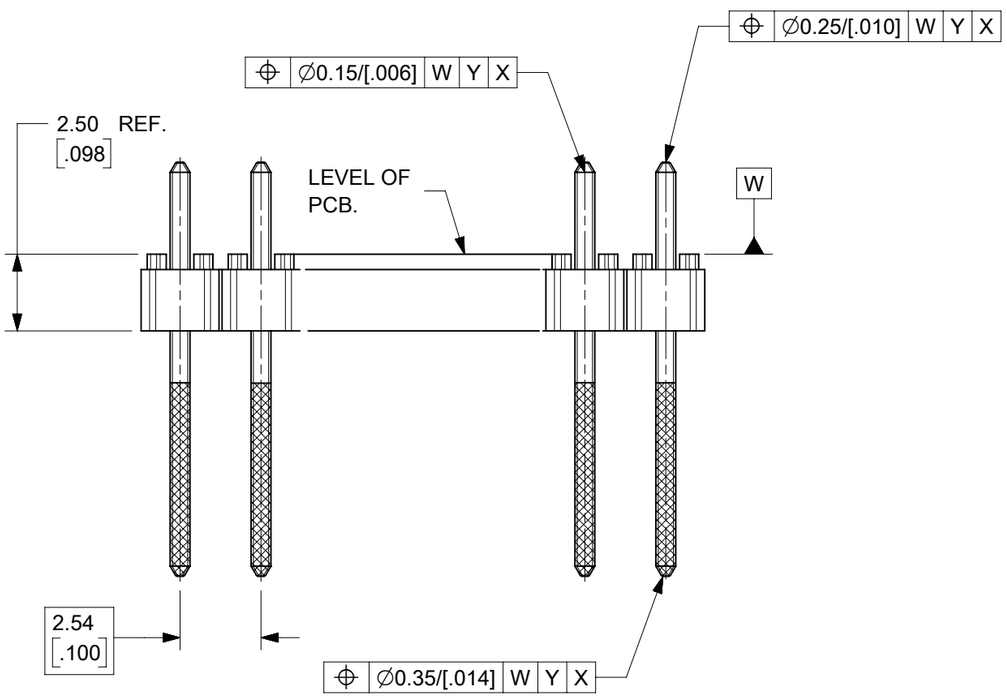

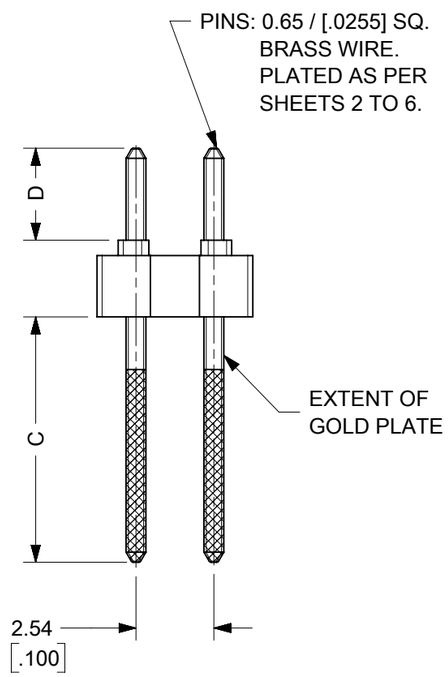

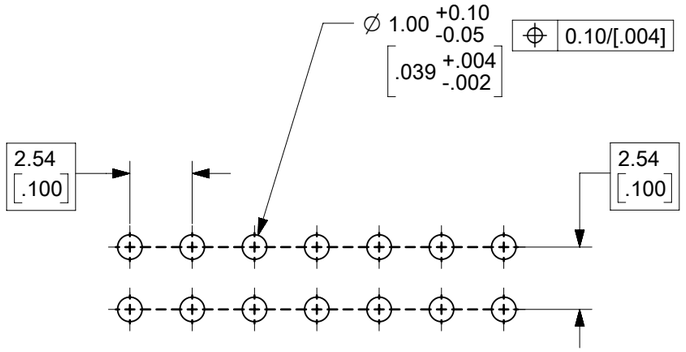

RECOMMENDED P.C. BOARD HOLE PATTERN

NOTES
1. PLEASE REFER TO SHT 2 FOR PLATING DETAILS.
2. PLEASE REFER TO SHT 3-8 FOR DIMENSIONS C & D.
3. RECOMMENDED PCB THICKNESS 1.60MM
4. PRODUCT SPECIFICATION: PS-99020-0001

DOCUMENT STATUS	P1	RELEASE DATE	2023/11/03 12:17:32

FORMAT: Mel-header-header-tb-prod-A3
REVISION: E1
DATE: 2021/05/07

THIS DRAWING CONTAINS INFORMATION THAT IS PROPRIETARY TO MOLEX ELECTRONIC TECHNOLOGIES, LLC AND SHOULD NOT BE USED WITHOUT WRITTEN PERMISSION

FUNCTIONAL SYMBOLS: EA = 0, EC = 0, EP = 0
DIVISIONAL SYMBOLS

DIMENSION UNITS: MM ONLY
SCALE: NTS

GENERAL TOLERANCES (UNLESS SPECIFIED)

	MM	INCH
4 PLACES	±	±
3 PLACES	±	±
2 PLACES	± 0.2	±
1 PLACE	±	±
0 PLACES	±	±
ANGULAR TOL	± 3.0 °	

DRAFT WHERE APPLICABLE MUST REMAIN WITHIN DIMENSIONS

CURRENT REV DESC: UPDATED AND REMASTERED IN ECTR NX

EC NO: 767931
DRWN: NAVEEK19 2023/10/25
CHK'D: SUAIFR 2023/11/03
APPR: MRAMAKRISHNA 2023/11/03

INITIAL REVISION:
DRWN: DB 1987/07/16
APPR: MLONG 2012/02/24

THIRD ANGLE PROJECTION | DRAWING: A3-SIZE | SERIES: 90131

molex

C GRID III DUAL ROW
STRAIGHT PIN HEADER

PRODUCT CUSTOMER DRAWING

DOCUMENT NUMBER	DOC TYPE	DOC PART	REVISION
SD-90131-001	PSD	001	P1

MATERIAL NUMBER	CUSTOMER	SHEET NUMBER
SEE TABLE	GENERAL MARKET	1 OF 8

PLATING OPTIONS	PLATING DESCRIPTION
A	3.00µm MIN TIN OVER 1.27MIN NICKEL OVERALL
B	0.38µm MIN GOLD IN SELECTED AREA AND 3.00µm MIN TIN IN SELECTED AREA AND 1.30µm MIN NICKEL OVERALL
C	0.76µm MIN GOLD IN SELECTED AREA AND 3.00µm MIN TIN IN SELECTED AREA AND 1.30µm MIN NICKEL OVERALL
D	0.05-0.10µm GOLD FLASH IN SELECTED AREA AND 3.00µm MIN TIN IN SELECTED AREA AND 1.30µm MIN NICKEL OVERALL
E	0.38µm MIN GOLD FLASH IN SELECTED AREA (2 SIDES) AND 3.00µm MIN TIN IN SELECTED AREA AND 1.30µm MIN NICKEL OVERALL
F	0.76µm MIN GOLD IN SELECTED AREA (2 SIDES) AND 3.00µm MIN TIN IN SELECTED AREA AND 1.30µm MIN NICKEL OVERALL
G	0.05-0.10µm GOLD FLASH IN SELECTED AREA (2 SIDES) AND 3.00µm MIN TIN IN SELECTED AREA AND 1.30µm MIN NICKEL OVERALL

THIS DRAWING CONTAINS INFORMATION THAT IS PROPRIETARY TO MOLEX ELECTRONIC TECHNOLOGIES, LLC AND SHOULD NOT BE USED WITHOUT WRITTEN PERMISSION

FUNCTIONAL SYMBOLS
EA = 0
EC = 0
EP = 0
DIVISIONAL SYMBOLS

DIMENSION UNITS: MM ONLY
SCALE: NTS

GENERAL TOLERANCES (UNLESS SPECIFIED)

	MM	INCH
4 PLACES	±	±
3 PLACES	±	±
2 PLACES	± 0.2	±
1 PLACE	±	±
0 PLACES	±	±
ANGULAR TOL	± 3.0 °	

DRAFT WHERE APPLICABLE MUST REMAIN WITHIN DIMENSIONS

CURRENT REV DESC: UPDATED AND REMASTERED IN ECTR NX

EC NO: 767931
DRWN: NAVEEK19 2023/10/25
CHK'D: SUAIFR 2023/11/03
APPR: MRAMAKRISHNA 2023/11/03

INITIAL REVISION:
DRWN: DB 1987/07/16
APPR: MLONG 2012/02/24

THIRD ANGLE PROJECTION
DRAWING: A3-SIZE
SERIES: 90131

molex

C GRID III DUAL ROW
STRAIGHT PIN HEADER

PRODUCT CUSTOMER DRAWING

DOCUMENT NUMBER	DOC TYPE	DOC PART	REVISION
SD-90131-001	PSD	001	P1

MATERIAL NUMBER	CUSTOMER	SHEET NUMBER
SEE TABLE	GENERAL MARKET	2 OF 8

DOCUMENT STATUS	P1	RELEASE DATE	2023/11/03 12:17:32

FORMAT: Metric-Customer-tb-prod-A3
REVISION: E1
DATE: 2021/05/07

CIRCUIT SIZE	PLATING TYPE A PART NO.	PLATING TYPE E PART NO.	PLATING TYPE F PART NO.
2 X 1	90131 - 0121	90131 - 0761	90131 - 0921
2 X 2	90131 - 0122	90131 - 0762	90131 - 0922
2 X 3	90131 - 0123	90131 - 0763	90131 - 0923
2 X 4	90131 - 0124	90131 - 0764	90131 - 0924
2 X 5	90131 - 0125	90131 - 0765	90131 - 0925
2 X 6	90131 - 0126	90131 - 0766	90131 - 0926
2 X 7	90131 - 0127	90131 - 0767	90131 - 0927
2 X 8	90131 - 0128	90131 - 0768	90131 - 0928
2 X 9	90131 - 0129	90131 - 0769	90131 - 0929
2 X 10	90131 - 0130	90131 - 0770	90131 - 0930
2 X 11	90131 - 0131	90131 - 0771	90131 - 0931
2 X 12	90131 - 0132	90131 - 0772	90131 - 0932
2 X 13	90131 - 0133	90131 - 0773	90131 - 0933
2 X 14	90131 - 0134	90131 - 0774	90131 - 0934
2 X 15	90131 - 0135	90131 - 0775	90131 - 0935
2 X 16	90131 - 0136	90131 - 0776	90131 - 0936
2 X 17	90131 - 0137	90131 - 0777	90131 - 0937
2 X 18	90131 - 0138	90131 - 0778	90131 - 0938
2 X 19	90131 - 0139	90131 - 0779	90131 - 0939
2 X 20	90131 - 0140	90131 - 0780	90131 - 0940
2 X 21	90131 - 0141	90131 - 0781	90131 - 0941
2 X 22	90131 - 0142	90131 - 0782	90131 - 0942
2 X 23	90131 - 0143	90131 - 0783	90131 - 0943
2 X 24	90131 - 0144	90131 - 0784	90131 - 0944
2 X 25	90131 - 0145	90131 - 0785	90131 - 0945
2 X 26	90131 - 0146	90131 - 0786	90131 - 0946
2 X 27	90131 - 0147	90131 - 0787	90131 - 0947
2 X 28	90131 - 0148	90131 - 0788	90131 - 0948
2 X 29	90131 - 0149	90131 - 0789	90131 - 0949
2 X 30	90131 - 0150	90131 - 0790	90131 - 0950
2 X 31	90131 - 0151	90131 - 0791	90131 - 0951
2 X 32	90131 - 0152	90131 - 0792	90131 - 0952
2 X 33	90131 - 0153	90131 - 0793	90131 - 0953
2 X 34	90131 - 0154	90131 - 0794	90131 - 0954
2 X 35	90131 - 0155	90131 - 0795	90131 - 0955
2 X 36	90131 - 0156	90131 - 0796	90131 - 0956
2 X 37	90131 - 0157	90131 - 0797	90131 - 0957
2 X 38	90131 - 0158	90131 - 0798	90131 - 0958
2 X 39	90131 - 0159	90131 - 0799	90131 - 0959
2 X 40	90131 - 0160	90131 - 0800	90131 - 0960

DIM	
C	±0.20 [±.008]
	6.75 [.266]

DIM	
D	+0.20/-0.30 [+.008/-.012]
	2.90 [.114]

STANDARD PRODUCTS

DOCUMENT STATUS	P1	RELEASE DATE	2023/11/03 12:17:32

FORMAT: Mel-logo-header-tb-prod-A3
REVISION: E1
DATE: 2021/05/07

FUNCTIONAL SYMBOLS
EA = 0
EC = 0
EP = 0
DIVISIONAL SYMBOLS

THIS DRAWING CONTAINS INFORMATION THAT IS PROPRIETARY TO MOLEX ELECTRONIC TECHNOLOGIES, LLC AND SHOULD NOT BE USED WITHOUT WRITTEN PERMISSION

DIMENSION UNITS	SCALE
MM ONLY	NTS

GENERAL TOLERANCES (UNLESS SPECIFIED)

	MM	INCH
4 PLACES	±	±
3 PLACES	±	±
2 PLACES	± 0.2	±
1 PLACE	±	±
0 PLACES	±	±
ANGULAR TOL	± 3.0 °	

DRAFT WHERE APPLICABLE MUST REMAIN WITHIN DIMENSIONS

CURRENT REV DESC: UPDATED AND REMASTERED IN ECTR NX

EC NO: 767931
DRWN: NAVEEK19 2023/10/25
CHK'D: SUAIFR 2023/11/03
APPR: MRAMAKRISHNA 2023/11/03

INITIAL REVISION:
DRWN: DB 1987/07/16
APPR: MLONG 2012/02/24

THIRD ANGLE PROJECTION | DRAWING: A3-SIZE | SERIES: 90131

molex

C GRID III DUAL ROW
STRAIGHT PIN HEADER

PRODUCT CUSTOMER DRAWING

DOCUMENT NUMBER	DOC TYPE	DOC PART	REVISION
SD-90131-001	PSD	001	P1

MATERIAL NUMBER	CUSTOMER	SHEET NUMBER
SEE TABLE	GENERAL MARKET	3 OF 8

DIM	
C	±0.20 [±.008]
	5.75 [.226]
DIM	
D	+0.20/-0.30 [+.008/-.012]
	2.90 [.114]

CIRCUIT SIZE	PLATING TYPE A PART NO.	PLATING TYPE E PART NO.	PLATING TYPE F PART NO.
2 X 1	90131 - 0041	90131 - 0681	90131 - 0841
2 X 2	90131 - 0042	90131 - 0682	90131 - 0842
2 X 3	90131 - 0043	90131 - 0683	90131 - 0843
2 X 4	90131 - 0044	90131 - 0684	90131 - 0844
2 X 5	90131 - 0045	90131 - 0685	90131 - 0845
2 X 6	90131 - 0046	90131 - 0686	90131 - 0846
2 X 7	90131 - 0047	90131 - 0687	90131 - 0847
2 X 8	90131 - 0048	90131 - 0688	90131 - 0848
2 X 9	90131 - 0049	90131 - 0689	90131 - 0849
2 X 10	90131 - 0050	90131 - 0690	90131 - 0850
2 X 11	90131 - 0051	90131 - 0691	90131 - 0851
2 X 12	90131 - 0052	90131 - 0692	90131 - 0852
2 X 13	90131 - 0053	90131 - 0693	90131 - 0853
2 X 14	90131 - 0054	90131 - 0694	90131 - 0854
2 X 15	90131 - 0055	90131 - 0695	90131 - 0855
2 X 16	90131 - 0056	90131 - 0696	90131 - 0856
2 X 17	90131 - 0057	90131 - 0697	90131 - 0857
2 X 18	90131 - 0058	90131 - 0698	90131 - 0858
2 X 19	90131 - 0059	90131 - 0699	90131 - 0859
2 X 20	90131 - 0060	90131 - 0700	90131 - 0860
2 X 21	90131 - 0061	90131 - 0701	90131 - 0861
2 X 22	90131 - 0062	90131 - 0702	90131 - 0862
2 X 23	90131 - 0063	90131 - 0703	90131 - 0863
2 X 24	90131 - 0064	90131 - 0704	90131 - 0864
2 X 25	90131 - 0065	90131 - 0705	90131 - 0865
2 X 26	90131 - 0066	90131 - 0706	90131 - 0866
2 X 27	90131 - 0067	90131 - 0707	90131 - 0867
2 X 28	90131 - 0068	90131 - 0708	90131 - 0868
2 X 29	90131 - 0069	90131 - 0709	90131 - 0869
2 X 30	90131 - 0070	90131 - 0710	90131 - 0870
2 X 31	90131 - 0071	90131 - 0711	90131 - 0871
2 X 32	90131 - 0072	90131 - 0712	90131 - 0872
2 X 33	90131 - 0073	90131 - 0713	90131 - 0873
2 X 34	90131 - 0074	90131 - 0714	90131 - 0874
2 X 35	90131 - 0075	90131 - 0715	90131 - 0875
2 X 36	90131 - 0076	90131 - 0716	90131 - 0876
2 X 37	90131 - 0077	90131 - 0717	90131 - 0877
2 X 38	90131 - 0078	90131 - 0718	90131 - 0878
2 X 39	90131 - 0079	90131 - 0719	90131 - 0879
2 X 40	90131 - 0080	90131 - 0720	90131 - 0880

DIM	
C	±0.20 [±.008]
	5.75 [.226]
DIM	
D	±0.25 [±.010]
	4.50 [.117]

CIRCUIT SIZE	PLATING TYPE A PART NO.	PLATING TYPE E PART NO.	PLATING TYPE F PART NO.
2 X 1	90131 - 0081	90131 - 0721	90131 - 0881
2 X 2	90131 - 0082	90131 - 0722	90131 - 0882
2 X 3	90131 - 0083	90131 - 0723	90131 - 0883
2 X 4	90131 - 0084	90131 - 0724	90131 - 0884
2 X 5	90131 - 0085	90131 - 0725	90131 - 0885
2 X 6	90131 - 0086	90131 - 0726	90131 - 0886
2 X 7	90131 - 0087	90131 - 0727	90131 - 0887
2 X 8	90131 - 0088	90131 - 0728	90131 - 0888
2 X 9	90131 - 0089	90131 - 0729	90131 - 0889
2 X 10	90131 - 0090	90131 - 0730	90131 - 0890
2 X 11	90131 - 0091	90131 - 0731	90131 - 0891
2 X 12	90131 - 0092	90131 - 0732	90131 - 0892
2 X 13	90131 - 0093	90131 - 0733	90131 - 0893
2 X 14	90131 - 0094	90131 - 0734	90131 - 0894
2 X 15	90131 - 0095	90131 - 0735	90131 - 0895
2 X 16	90131 - 0096	90131 - 0736	90131 - 0896
2 X 17	90131 - 0097	90131 - 0737	90131 - 0897
2 X 18	90131 - 0098	90131 - 0738	90131 - 0898
2 X 19	90131 - 0099	90131 - 0739	90131 - 0899
2 X 20	90131 - 0100	90131 - 0740	90131 - 0900
2 X 21	90131 - 0101	90131 - 0741	90131 - 0901
2 X 22	90131 - 0102	90131 - 0742	90131 - 0902
2 X 23	90131 - 0103	90131 - 0743	90131 - 0903
2 X 24	90131 - 0104	90131 - 0744	90131 - 0904
2 X 25	90131 - 0105	90131 - 0745	90131 - 0905
2 X 26	90131 - 0106	90131 - 0746	90131 - 0906
2 X 27	90131 - 0107	90131 - 0747	90131 - 0907
2 X 28	90131 - 0108	90131 - 0748	90131 - 0908
2 X 29	90131 - 0109	90131 - 0749	90131 - 0909
2 X 30	90131 - 0110	90131 - 0750	90131 - 0910
2 X 31	90131 - 0111	90131 - 0751	90131 - 0911
2 X 32	90131 - 0112	90131 - 0752	90131 - 0912
2 X 33	90131 - 0113	90131 - 0753	90131 - 0913
2 X 34	90131 - 0114	90131 - 0754	90131 - 0914
2 X 35	90131 - 0115	90131 - 0755	90131 - 0915
2 X 36	90131 - 0116	90131 - 0756	90131 - 0916
2 X 37	90131 - 0117	90131 - 0757	90131 - 0917
2 X 38	90131 - 0118	90131 - 0758	90131 - 0918
2 X 39	90131 - 0119	90131 - 0759	90131 - 0919
2 X 40	90131 - 0120	90131 - 0760	90131 - 0920

NON-STANDARD PRODUCTS

THIS DRAWING CONTAINS INFORMATION THAT IS PROPRIETARY TO MOLEX ELECTRONIC TECHNOLOGIES, LLC AND SHOULD NOT BE USED WITHOUT WRITTEN PERMISSION

FUNCTIONAL SYMBOLS: EA = 0, EC = 0, EP = 0

DIVISIONAL SYMBOLS

DIMENSION UNITS: MM ONLY

SCALE: NTS

GENERAL TOLERANCES (UNLESS SPECIFIED)

	MM	INCH
4 PLACES	±	±
3 PLACES	±	±
2 PLACES	± 0.2	±
1 PLACE	±	±
0 PLACES	±	±
ANGULAR TOL	± 3.0 °	

DRAFT WHERE APPLICABLE MUST REMAIN WITHIN DIMENSIONS

CURRENT REV DESC: UPDATED AND REMASTERED IN ECTR NX

EC NO: 767931
DRWN: NAVEEK19 2023/10/25
CHK'D: SUAIFR 2023/11/03
APPR: MRAMAKRISHNA 2023/11/03

INITIAL REVISION:
DRWN: DB 1987/07/16
APPR: MLONG 2012/02/24

THIRD ANGLE PROJECTION | DRAWING: A3-SIZE | SERIES: 90131

molex

C GRID III DUAL ROW
STRAIGHT PIN HEADER

PRODUCT CUSTOMER DRAWING

DOCUMENT NUMBER	DOC TYPE	DOC PART	REVISION
SD-90131-001	PSD	001	P1

MATERIAL NUMBER	CUSTOMER	SHEET NUMBER
SEE TABLE	GENERAL MARKET	4 OF 8

DOCUMENT STATUS	P1	RELEASE DATE	2023/11/03 12:17:32

FORMAT: Mel-tpl-tb-order-tb-prod-A3
REVISION: E1
DATE: 2021/05/07

CIRCUIT SIZE	PLATING TYPE A PART NO.	PLATING TYPE E PART NO.	PLATING TYPE F PART NO.
2 X 1	90131 - 0161	90131 - 0801	90131 - 0961
2 X 2	90131 - 0162	90131 - 0802	90131 - 0962
2 X 3	90131 - 0163	90131 - 0803	90131 - 0963
2 X 4	90131 - 0164	90131 - 0804	90131 - 0964
2 X 5	90131 - 0165	90131 - 0805	90131 - 0965
2 X 6	90131 - 0166	90131 - 0806	90131 - 0966
2 X 7	90131 - 0167	90131 - 0807	90131 - 0967
2 X 8	90131 - 0168	90131 - 0808	90131 - 0968
2 X 9	90131 - 0169	90131 - 0809	90131 - 0969
2 X 10	90131 - 0170	90131 - 0810	90131 - 0970
2 X 11	90131 - 0171	90131 - 0811	90131 - 0971
2 X 12	90131 - 0172	90131 - 0812	90131 - 0972
2 X 13	90131 - 0173	90131 - 0813	90131 - 0973
2 X 14	90131 - 0174	90131 - 0814	90131 - 0974
2 X 15	90131 - 0175	90131 - 0815	90131 - 0975
2 X 16	90131 - 0176	90131 - 0816	90131 - 0976
2 X 17	90131 - 0177	90131 - 0817	90131 - 0977
2 X 18	90131 - 0178	90131 - 0818	90131 - 0978
2 X 19	90131 - 0179	90131 - 0819	90131 - 0979
2 X 20	90131 - 0180	90131 - 0820	90131 - 0980
2 X 21	90131 - 0181	90131 - 0821	90131 - 0981
2 X 22	90131 - 0182	90131 - 0822	90131 - 0982
2 X 23	90131 - 0183	90131 - 0823	90131 - 0983
2 X 24	90131 - 0184	90131 - 0824	90131 - 0984
2 X 25	90131 - 0185	90131 - 0825	90131 - 0985
2 X 26	90131 - 0186	90131 - 0826	90131 - 0986
2 X 27	90131 - 0187	90131 - 0827	90131 - 0987
2 X 28	90131 - 0188	90131 - 0828	90131 - 0988
2 X 29	90131 - 0189	90131 - 0829	90131 - 0989
2 X 30	90131 - 0190	90131 - 0830	90131 - 0990
2 X 31	90131 - 0191	90131 - 0831	90131 - 0991
2 X 32	90131 - 0192	90131 - 0832	90131 - 0992
2 X 33	90131 - 0193	90131 - 0833	90131 - 0993
2 X 34	90131 - 0194	90131 - 0834	90131 - 0994
2 X 35	90131 - 0195	90131 - 0835	90131 - 0995
2 X 36	90131 - 0196	90131 - 0836	90131 - 0996
2 X 37	90131 - 0197	90131 - 0837	90131 - 0997
2 X 38	90131 - 0198	90131 - 0838	90131 - 0998
2 X 39	90131 - 0199	90131 - 0839	90131 - 0999
2 X 40	90131 - 0200	90131 - 0840	90131 - 1000

DIM		
C	±0.20 [±.008]	6.75 [.266]
D	±0.25 [±.010]	4.50 [.117]

NON-STANDARD PRODUCTS

DOCUMENT STATUS	P1	RELEASE DATE	2023/11/03 12:17:32

FORMAT: Mel-spec-cover-tb-prod-A3
REVISION: E1
DATE: 2021/05/07

THIS DRAWING CONTAINS INFORMATION THAT IS PROPRIETARY TO MOLEX ELECTRONIC TECHNOLOGIES, LLC AND SHOULD NOT BE USED WITHOUT WRITTEN PERMISSION

FUNCTIONAL SYMBOLS: FA = 0, FC = 0, FP = 0
DIVISIONAL SYMBOLS

DIMENSION UNITS: MM ONLY
SCALE: NTS

GENERAL TOLERANCES (UNLESS SPECIFIED)

	MM	INCH
4 PLACES	±	±
3 PLACES	±	±
2 PLACES	± 0.2	±
1 PLACE	±	±
0 PLACES	±	±
ANGULAR TOL	± 3.0 °	

DRAFT WHERE APPLICABLE MUST REMAIN WITHIN DIMENSIONS

CURRENT REV DESC: UPDATED AND REMASTERED IN ECTR NX

EC NO: 767931
DRWN: NAVEEK19 2023/10/25
CHK'D: SUAIFR 2023/11/03
APPR: MRAMAKRISHNA 2023/11/03

INITIAL REVISION:
DRWN: DB 1987/07/16
APPR: MLONG 2012/02/24

THIRD ANGLE PROJECTION | DRAWING: A3-SIZE | SERIES: 90131

molex

C GRID III DUAL ROW
STRAIGHT PIN HEADER

PRODUCT CUSTOMER DRAWING

DOCUMENT NUMBER	DOC TYPE	DOC PART	REVISION
SD-90131-001	PSD	001	P1

MATERIAL NUMBER	CUSTOMER	SHEET NUMBER
SEE TABLE	GENERAL MARKET	5 OF 8

CIRCUIT SIZE	PLATING TYPE B PART NO.	PLATING TYPE C PART NO.	PLATING TYPE D PART NO.	PLATING TYPE G PART NO.
2 X 1	90131 - 0281	90131 - 0441	90131 - 0601	90131 - 1081
2 X 2	90131 - 0282	90131 - 0442	90131 - 0602	90131 - 1082
2 X 3	90131 - 0283	90131 - 0443	90131 - 0603	90131 - 1083
2 X 4	90131 - 0284	90131 - 0444	90131 - 0604	90131 - 1084
2 X 5	90131 - 0285	90131 - 0445	90131 - 0605	90131 - 1085
2 X 6	90131 - 0286	90131 - 0446	90131 - 0606	90131 - 1086
2 X 7	90131 - 0287	90131 - 0447	90131 - 0607	90131 - 1087
2 X 8	90131 - 0288	90131 - 0448	90131 - 0608	90131 - 1088
2 X 9	90131 - 0289	90131 - 0449	90131 - 0609	90131 - 1089
2 X 10	90131 - 0290	90131 - 0450	90131 - 0610	90131 - 1090
2 X 11	90131 - 0291	90131 - 0451	90131 - 0611	90131 - 1091
2 X 12	90131 - 0292	90131 - 0452	90131 - 0612	90131 - 1092
2 X 13	90131 - 0293	90131 - 0453	90131 - 0613	90131 - 1093
2 X 14	90131 - 0294	90131 - 0454	90131 - 0614	90131 - 1094
2 X 15	90131 - 0295	90131 - 0455	90131 - 0615	90131 - 1095
2 X 16	90131 - 0296	90131 - 0456	90131 - 0616	90131 - 1096
2 X 17	90131 - 0297	90131 - 0457	90131 - 0617	90131 - 1097
2 X 18	90131 - 0298	90131 - 0458	90131 - 0618	90131 - 1098
2 X 19	90131 - 0299	90131 - 0459	90131 - 0619	90131 - 1099
2 X 20	90131 - 0300	90131 - 0460	90131 - 0620	90131 - 1100
2 X 21	90131 - 0301	90131 - 0461	90131 - 0621	90131 - 1101
2 X 22	90131 - 0302	90131 - 0462	90131 - 0622	90131 - 1102
2 X 23	90131 - 0303	90131 - 0463	90131 - 0623	90131 - 1103
2 X 24	90131 - 0304	90131 - 0464	90131 - 0624	90131 - 1104
2 X 25	90131 - 0305	90131 - 0465	90131 - 0625	90131 - 1105
2 X 26	90131 - 0306	90131 - 0466	90131 - 0626	90131 - 1106
2 X 27	90131 - 0307	90131 - 0467	90131 - 0627	90131 - 1107
2 X 28	90131 - 0308	90131 - 0468	90131 - 0628	90131 - 1108
2 X 29	90131 - 0309	90131 - 0469	90131 - 0629	90131 - 1109
2 X 30	90131 - 0310	90131 - 0470	90131 - 0630	90131 - 1110
2 X 31	90131 - 0311	90131 - 0471	90131 - 0631	90131 - 1111
2 X 32	90131 - 0312	90131 - 0472	90131 - 0632	90131 - 1112
2 X 33	90131 - 0313	90131 - 0473	90131 - 0633	90131 - 1113
2 X 34	90131 - 0314	90131 - 0474	90131 - 0634	90131 - 1114
2 X 35	90131 - 0315	90131 - 0475	90131 - 0635	90131 - 1115
2 X 36	90131 - 0316	90131 - 0476	90131 - 0636	90131 - 1116
2 X 37	90131 - 0317	90131 - 0477	90131 - 0637	90131 - 1117
2 X 38	90131 - 0318	90131 - 0478	90131 - 0638	90131 - 1118
2 X 39	90131 - 0319	90131 - 0479	90131 - 0639	90131 - 1119
2 X 40	90131 - 0320	90131 - 0480	90131 - 0640	90131 - 1120

DIM	
C	±0.20 [±.008]
	6.75 [.266]
DIM	
D	+0.20/-0.30 [+.008/-.012]
	2.90 [.114]

CIRCUIT SIZE	PLATING TYPE B PART NO.	PLATING TYPE C PART NO.	PLATING TYPE D PART NO.	PLATING TYPE G PART NO.
2 X 1	90131 - 0201	90131 - 0361	90131 - 0521	90131 - 1001
2 X 2	90131 - 0202	90131 - 0362	90131 - 0522	90131 - 1002
2 X 3	90131 - 0203	90131 - 0363	90131 - 0523	90131 - 1003
2 X 4	90131 - 0204	90131 - 0364	90131 - 0524	90131 - 1004
2 X 5	90131 - 0205	90131 - 0365	90131 - 0525	90131 - 1005
2 X 6	90131 - 0206	90131 - 0366	90131 - 0526	90131 - 1006
2 X 7	90131 - 0207	90131 - 0367	90131 - 0527	90131 - 1007
2 X 8	90131 - 0208	90131 - 0368	90131 - 0528	90131 - 1008
2 X 9	90131 - 0209	90131 - 0369	90131 - 0529	90131 - 1009
2 X 10	90131 - 0210	90131 - 0370	90131 - 0530	90131 - 1010
2 X 11	90131 - 0211	90131 - 0371	90131 - 0531	90131 - 1011
2 X 12	90131 - 0212	90131 - 0372	90131 - 0532	90131 - 1012
2 X 13	90131 - 0213	90131 - 0373	90131 - 0533	90131 - 1013
2 X 14	90131 - 0214	90131 - 0374	90131 - 0534	90131 - 1014
2 X 15	90131 - 0215	90131 - 0375	90131 - 0535	90131 - 1015
2 X 16	90131 - 0216	90131 - 0376	90131 - 0536	90131 - 1016
2 X 17	90131 - 0217	90131 - 0377	90131 - 0537	90131 - 1017
2 X 18	90131 - 0218	90131 - 0378	90131 - 0538	90131 - 1018
2 X 19	90131 - 0219	90131 - 0379	90131 - 0539	90131 - 1019
2 X 20	90131 - 0220	90131 - 0380	90131 - 0540	90131 - 1020
2 X 21	90131 - 0221	90131 - 0381	90131 - 0541	90131 - 1021
2 X 22	90131 - 0222	90131 - 0382	90131 - 0542	90131 - 1022
2 X 23	90131 - 0223	90131 - 0383	90131 - 0543	90131 - 1023
2 X 24	90131 - 0224	90131 - 0384	90131 - 0544	90131 - 1024
2 X 25	90131 - 0225	90131 - 0385	90131 - 0545	90131 - 1025
2 X 26	90131 - 0226	90131 - 0386	90131 - 0546	90131 - 1026
2 X 27	90131 - 0227	90131 - 0387	90131 - 0547	90131 - 1027
2 X 28	90131 - 0228	90131 - 0388	90131 - 0548	90131 - 1028
2 X 29	90131 - 0229	90131 - 0389	90131 - 0549	90131 - 1029
2 X 30	90131 - 0230	90131 - 0390	90131 - 0550	90131 - 1030
2 X 31	90131 - 0231	90131 - 0391	90131 - 0551	90131 - 1031
2 X 32	90131 - 0232	90131 - 0392	90131 - 0552	90131 - 1032
2 X 33	90131 - 0233	90131 - 0393	90131 - 0553	90131 - 1033
2 X 34	90131 - 0234	90131 - 0394	90131 - 0554	90131 - 1034
2 X 35	90131 - 0235	90131 - 0395	90131 - 0555	90131 - 1035
2 X 36	90131 - 0236	90131 - 0396	90131 - 0556	90131 - 1036
2 X 37	90131 - 0237	90131 - 0397	90131 - 0557	90131 - 1037
2 X 38	90131 - 0238	90131 - 0398	90131 - 0558	90131 - 1038
2 X 39	90131 - 0239	90131 - 0399	90131 - 0559	90131 - 1039
2 X 40	90131 - 0240	90131 - 0400	90131 - 0560	90131 - 1040

DIM	
C	±0.20 [±.008]
	5.75 [.226]
DIM	
D	+0.20/-0.30 [+.008/-.012]
	2.90 [.114]

NON-STANDARD PRODUCTS
NOT FOR GENERAL RELEASE

FUNCTIONAL SYMBOLS
EA = 0
EC = 0
EP = 0
DIVISIONAL SYMBOLS

THIS DRAWING CONTAINS INFORMATION THAT IS PROPRIETARY TO MOLEX ELECTRONIC TECHNOLOGIES, LLC AND SHOULD NOT BE USED WITHOUT WRITTEN PERMISSION

DIMENSION UNITS: MM ONLY
SCALE: NTS

GENERAL TOLERANCES (UNLESS SPECIFIED)

	MM	INCH
4 PLACES	±	±
3 PLACES	±	±
2 PLACES	± 0.2	±
1 PLACE	±	±
0 PLACES	±	±
ANGULAR TOL	± 3.0 °	

DRAFT WHERE APPLICABLE MUST REMAIN WITHIN DIMENSIONS

CURRENT REV DESC: UPDATED AND REMASTERED IN ECTR NX

EC NO: 767931
DRWN: NAVEEK19 2023/10/25
CHK'D: SUAIFR 2023/11/03
APPR: MRAMAKRISHNA 2023/11/03

INITIAL REVISION:
DRWN: DB 1987/07/16
APPR: MLONG 2012/02/24

THIRD ANGLE PROJECTION
DRAWING: A3-SIZE
SERIES: 90131

molex

C GRID III DUAL ROW
STRAIGHT PIN HEADER

PRODUCT CUSTOMER DRAWING

DOCUMENT NUMBER	DOC TYPE	DOC PART	REVISION
SD-90131-001	PSD	001	P1

MATERIAL NUMBER	CUSTOMER	SHEET NUMBER
SEE TABLE	GENERAL MARKET	6 OF 8

DOCUMENT STATUS	P1	RELEASE DATE	2023/11/03 12:17:32

FORMAT: Met-tpl-prod-landscape-ib-prod-A3
REVISION: E1
DATE: 2021/05/07

DIM	CIRCUIT SIZE	PLATING TYPE B PART NO.	PLATING TYPE C PART NO.	PLATING TYPE D PART NO.	PLATING TYPE G PART NO.
	2 X 1	90131 - 0241	90131 - 0401	90131 - 0561	90131 - 1041
	2 X 2	90131 - 0242	90131 - 0402	90131 - 0562	90131 - 1042
	2 X 3	90131 - 0243	90131 - 0403	90131 - 0563	90131 - 1043
	2 X 4	90131 - 0244	90131 - 0404	90131 - 0564	90131 - 1044
	2 X 5	90131 - 0245	90131 - 0405	90131 - 0565	90131 - 1045
	2 X 6	90131 - 0246	90131 - 0406	90131 - 0566	90131 - 1046
	2 X 7	90131 - 0247	90131 - 0407	90131 - 0567	90131 - 1047
	2 X 8	90131 - 0248	90131 - 0408	90131 - 0568	90131 - 1048
	2 X 9	90131 - 0249	90131 - 0409	90131 - 0569	90131 - 1049
DIM C ±0.20 [±.008] 5.75 [.226]	2 X 10	90131 - 0250	90131 - 0410	90131 - 0570	90131 - 1050
	2 X 11	90131 - 0251	90131 - 0411	90131 - 0571	90131 - 1051
	2 X 12	90131 - 0252	90131 - 0412	90131 - 0572	90131 - 1052
	2 X 13	90131 - 0253	90131 - 0413	90131 - 0573	90131 - 1053
	2 X 14	90131 - 0254	90131 - 0414	90131 - 0574	90131 - 1054
DIM D ±0.25 [±.010] 4.50 [.117]	2 X 15	90131 - 0255	90131 - 0415	90131 - 0575	90131 - 1055
	2 X 16	90131 - 0256	90131 - 0416	90131 - 0576	90131 - 1056
	2 X 17	90131 - 0257	90131 - 0417	90131 - 0577	90131 - 1057
	2 X 18	90131 - 0258	90131 - 0418	90131 - 0578	90131 - 1058
	2 X 19	90131 - 0259	90131 - 0419	90131 - 0579	90131 - 1059
	2 X 20	90131 - 0260	90131 - 0420	90131 - 0580	90131 - 1060
	2 X 21	90131 - 0261	90131 - 0421	90131 - 0581	90131 - 1061
	2 X 22	90131 - 0262	90131 - 0422	90131 - 0582	90131 - 1062
	2 X 23	90131 - 0263	90131 - 0423	90131 - 0583	90131 - 1063
	2 X 24	90131 - 0264	90131 - 0424	90131 - 0584	90131 - 1064
	2 X 25	90131 - 0265	90131 - 0425	90131 - 0585	90131 - 1065
	2 X 26	90131 - 0266	90131 - 0426	90131 - 0586	90131 - 1066
	2 X 27	90131 - 0267	90131 - 0427	90131 - 0587	90131 - 1067
	2 X 28	90131 - 0268	90131 - 0428	90131 - 0588	90131 - 1068
	2 X 29	90131 - 0269	90131 - 0429	90131 - 0589	90131 - 1069
	2 X 30	90131 - 0270	90131 - 0430	90131 - 0590	90131 - 1070
	2 X 31	90131 - 0271	90131 - 0431	90131 - 0591	90131 - 1071
	2 X 32	90131 - 0272	90131 - 0432	90131 - 0592	90131 - 1072
	2 X 33	90131 - 0273	90131 - 0433	90131 - 0593	90131 - 1073
	2 X 34	90131 - 0274	90131 - 0434	90131 - 0594	90131 - 1074
	2 X 35	90131 - 0275	90131 - 0435	90131 - 0595	90131 - 1075
	2 X 36	90131 - 0276	90131 - 0436	90131 - 0596	90131 - 1076
	2 X 37	90131 - 0277	90131 - 0437	90131 - 0597	90131 - 1077
	2 X 38	90131 - 0278	90131 - 0438	90131 - 0598	90131 - 1078
	2 X 39	90131 - 0279	90131 - 0439	90131 - 0599	90131 - 1079
	2 X 40	90131 - 0280	90131 - 0440	90131 - 0600	90131 - 1080

DIM	CIRCUIT SIZE	PLATING TYPE B PART NO.	PLATING TYPE C PART NO.	PLATING TYPE D PART NO.	PLATING TYPE G PART NO.
	2 X 1	90131 - 0321	90131 - 0481	90131 - 0641	90131 - 1121
	2 X 2	90131 - 0322	90131 - 0482	90131 - 0642	90131 - 1122
	2 X 3	90131 - 0323	90131 - 0483	90131 - 0643	90131 - 1123
	2 X 4	90131 - 0324	90131 - 0484	90131 - 0644	90131 - 1124
	2 X 5	90131 - 0325	90131 - 0485	90131 - 0645	90131 - 1125
	2 X 6	90131 - 0326	90131 - 0486	90131 - 0646	90131 - 1126
	2 X 7	90131 - 0327	90131 - 0487	90131 - 0647	90131 - 1127
	2 X 8	90131 - 0328	90131 - 0488	90131 - 0648	90131 - 1128
	2 X 9	90131 - 0329	90131 - 0489	90131 - 0649	90131 - 1129
DIM C ±0.20 [±.008] 6.75 [.266]	2 X 10	90131 - 0330	90131 - 0490	90131 - 0650	90131 - 1130
	2 X 11	90131 - 0331	90131 - 0491	90131 - 0651	90131 - 1131
	2 X 12	90131 - 0332	90131 - 0492	90131 - 0652	90131 - 1132
	2 X 13	90131 - 0333	90131 - 0493	90131 - 0653	90131 - 1133
	2 X 14	90131 - 0334	90131 - 0494	90131 - 0654	90131 - 1134
DIM D ±0.25 [±.010] 4.50 [.117]	2 X 15	90131 - 0335	90131 - 0495	90131 - 0655	90131 - 1135
	2 X 16	90131 - 0336	90131 - 0496	90131 - 0656	90131 - 1136
	2 X 17	90131 - 0337	90131 - 0497	90131 - 0657	90131 - 1137
	2 X 18	90131 - 0338	90131 - 0498	90131 - 0658	90131 - 1138
	2 X 19	90131 - 0339	90131 - 0499	90131 - 0659	90131 - 1139
	2 X 20	90131 - 0340	90131 - 0500	90131 - 0660	90131 - 1140
	2 X 21	90131 - 0341	90131 - 0501	90131 - 0661	90131 - 1141
	2 X 22	90131 - 0342	90131 - 0502	90131 - 0662	90131 - 1142
	2 X 23	90131 - 0343	90131 - 0503	90131 - 0663	90131 - 1143
	2 X 24	90131 - 0344	90131 - 0504	90131 - 0664	90131 - 1144
	2 X 25	90131 - 0345	90131 - 0505	90131 - 0665	90131 - 1145
	2 X 26	90131 - 0346	90131 - 0506	90131 - 0666	90131 - 1146
	2 X 27	90131 - 0347	90131 - 0507	90131 - 0667	90131 - 1147
	2 X 28	90131 - 0348	90131 - 0508	90131 - 0668	90131 - 1148
	2 X 29	90131 - 0349	90131 - 0509	90131 - 0669	90131 - 1149
	2 X 30	90131 - 0350	90131 - 0510	90131 - 0670	90131 - 1150
	2 X 31	90131 - 0351	90131 - 0511	90131 - 0671	90131 - 1151
	2 X 32	90131 - 0352	90131 - 0512	90131 - 0672	90131 - 1152
	2 X 33	90131 - 0353	90131 - 0513	90131 - 0673	90131 - 1153
	2 X 34	90131 - 0354	90131 - 0514	90131 - 0674	90131 - 1154
	2 X 35	90131 - 0355	90131 - 0515	90131 - 0675	90131 - 1155
	2 X 36	90131 - 0356	90131 - 0516	90131 - 0676	90131 - 1156
	2 X 37	90131 - 0357	90131 - 0517	90131 - 0677	90131 - 1157
	2 X 38	90131 - 0358	90131 - 0518	90131 - 0678	90131 - 1158
	2 X 39	90131 - 0359	90131 - 0519	90131 - 0679	90131 - 1159
	2 X 40	90131 - 0360	90131 - 0520	90131 - 0680	90131 - 1160

NON-STANDARD PRODUCTS
NOT FOR GENERAL RELEASE

THIS DRAWING CONTAINS INFORMATION THAT IS PROPRIETARY TO MOLEX ELECTRONIC TECHNOLOGIES, LLC AND SHOULD NOT BE USED WITHOUT WRITTEN PERMISSION

FUNCTIONAL SYMBOLS: EA = 0, EC = 0, EP = 0
DIVISIONAL SYMBOLS

DIMENSION UNITS: MM ONLY
SCALE: NTS

GENERAL TOLERANCES (UNLESS SPECIFIED)

	MM	INCH
4 PLACES	±	±
3 PLACES	±	±
2 PLACES	± 0.2	±
1 PLACE	±	±
0 PLACES	±	±
ANGULAR TOL	± 3.0 °	

DRAFT WHERE APPLICABLE MUST REMAIN WITHIN DIMENSIONS

CURRENT REV DESC: UPDATED AND REMASTERED IN ECTR NX

EC NO: 767931
DRWN: NAVEEK19 2023/10/25
CHK'D: SUAIFR 2023/11/03
APPR: MRAMAKRISHNA 2023/11/03

INITIAL REVISION:
DRWN: DB 1987/07/16
APPR: MLONG 2012/02/24

THIRD ANGLE PROJECTION
DRAWING: A3-SIZE
SERIES: 90131

molex

C GRID III DUAL ROW
STRAIGHT PIN HEADER

PRODUCT CUSTOMER DRAWING

DOCUMENT NUMBER	DOC TYPE	DOC PART	REVISION
SD-90131-001	PSD	001	P1

MATERIAL NUMBER	CUSTOMER	SHEET NUMBER
SEE TABLE	GENERAL MARKET	7 OF 8

DOCUMENT STATUS	P1	RELEASE DATE	2023/11/03 12:17:32

CIRCUIT SIZE	PLATING TYPE A PART NO.	PIN PART NUMBER	WAFER PART NUMBER	±0.20 DIM C [±.008]	+0.20/-0.30 DIM D [+.008/-.012]
2 X 6	90131-3126	90129-2008	90131-0040	14.60 [.575]	2.38 [.094]
2 X 36	90131-3128	90129-2008	90131-0040	14.60 [.575]	2.38 [.094]
2 X 40	90131-3127	90129-2008	90131-0040	14.60 [.575]	2.38 [.094]

STANDARD PRODUCTS

DOCUMENT STATUS	P1	RELEASE DATE	2023/11/03 12:17:32

FORMAT: Molex-letter-tb-prod-A3
REVISION: E1
DATE: 2021/05/07

THIS DRAWING CONTAINS INFORMATION THAT IS PROPRIETARY TO MOLEX ELECTRONIC TECHNOLOGIES, LLC AND SHOULD NOT BE USED WITHOUT WRITTEN PERMISSION

FUNCTIONAL SYMBOLS
EA = 0
EC = 0
ED = 0

DIVISIONAL SYMBOLS

DIMENSION UNITS: MM ONLY
SCALE: NTS

GENERAL TOLERANCES (UNLESS SPECIFIED)

	MM	INCH
4 PLACES	±	±
3 PLACES	±	±
2 PLACES	± 0.2	±
1 PLACE	±	±
0 PLACES	±	±
ANGULAR TOL	± 3.0 °	

DRAFT WHERE APPLICABLE MUST REMAIN WITHIN DIMENSIONS

CURRENT REV DESC: UPDATED AND REMASTERED IN ECTR NX

EC NO: 767931
DRWN: NAVEEK19 2023/10/25
CHK'D: SUAIFR 2023/11/03
APPR: MRAMAKRISHNA 2023/11/03

INITIAL REVISION:
DRWN: DB 1987/07/16
APPR: MLONG 2012/02/24

THIRD ANGLE PROJECTION
DRAWING: A3-SIZE
SERIES: 90131

molex

C GRID III DUAL ROW
STRAIGHT PIN HEADER

PRODUCT CUSTOMER DRAWING

DOCUMENT NUMBER	DOC TYPE	DOC PART	REVISION
SD-90131-001	PSD	001	P1

MATERIAL NUMBER	CUSTOMER	SHEET NUMBER
SEE TABLE	GENERAL MARKET	8 OF 8