SAMZO | REAC/ROHS

REV	ECN NO	DESRIPTION	DESIGN	APPROVAL	DATE
A1	NEW	Replace frame			2018.06.12

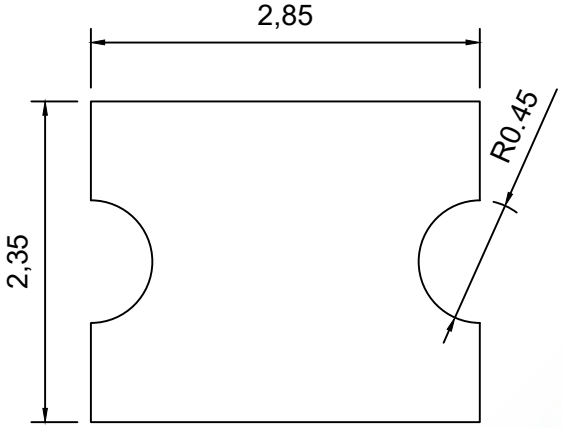

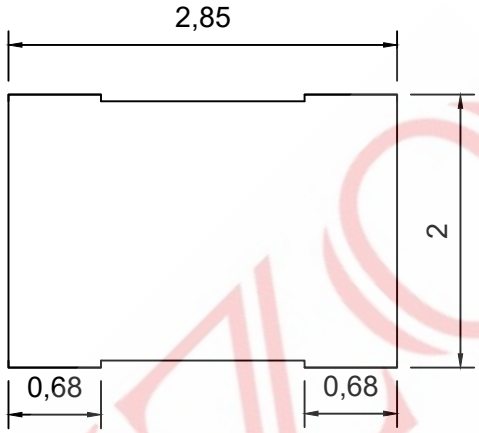

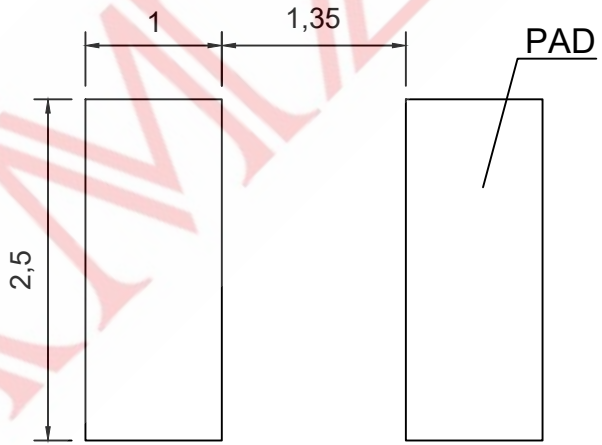

PCB PAD LAYOUT

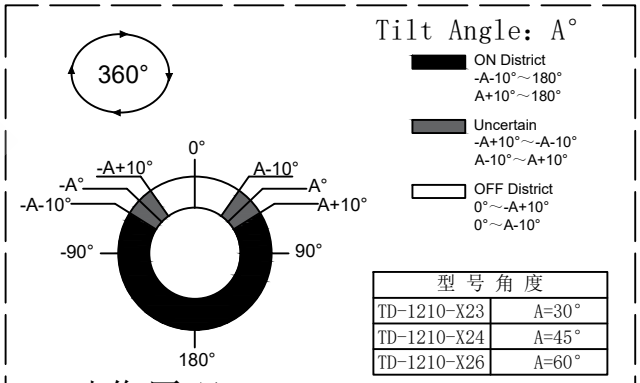

型 号	角 度
TD-1210-X23	A=30°
TD-1210-X24	A=45°
TD-1210-X26	A=60°

动作原理Operating principle.

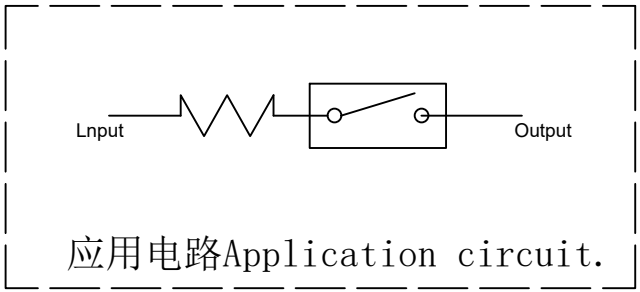

应用电路Application circuit.

TD 1210 X** A1

Ⓐ Ⓑ Ⓒ Ⓓ

A. TD:Vibration sensing switch.
B. 1210:Product series.
C. Angle:X23=30° /X24=45° /X26=60° .
D. A1:Mold number.

ITEM	DESCRIPTION	MATERIAL	QTY	FINSH/COLOR					
B	金属	黄铜	1	镀金/镀银	CHECKED	ZHENGUILAN	2018.06.12		
A	塑胶	LCP	1	黑色	APPROVED	LILIANJIANG	2018.06.14		

GENERAL TOLERANCE	
≥0~2<	±0.15
≥2~5<	±0.25
≥0~2<	±0.15
≥5	±0.35

FIRST VIEW

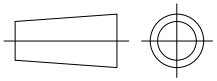

SCALE	1:1	UNIT	mm

DESIGN WANGGUIFA 2018.06.12

The copyright belongs to samzo parts [China] Co., Ltd. please use the material after samzo parts agree to authorize. The final right of interpretation belongs to samzo parts.
WWW.KKK-JP.COM

SAMZO COMPONENTS
Electronic switch and connector manufacturer

TITLE:: 2.85*2.35*2.0 360°
DWG NO: 1210-P33001
PART NO: 23202020037
MODEL NO: TD-1210-X**-A1
NAME: Vibration sensing switch