NOTES:

1. MATERIAL:
   "BLANK": NYLON 6/6, 94V-2, COLOR:NATURAL.
   210: NYLON 6/6, 94V-0, COLOR:NATURAL.
   400: NYLON 6/6, 94V-0, COLOR : BLACK.
2. FINISH: NOT APPLICABLE.
3. PRODUCT SPECIFICATION: PS-5556-001.
4. PACKAGING SPECIFICATION: PK-5557-002.
5. PART MATES WITH MOLEX PLUG #5559-*, VERTICAL HEADER #5566-*, AND RIGHT ANGLE HEADER #5569-*.
6. PART IS FOR USE WITH MOLEX FEMALE TERMINAL #5556-*.
7. PART CONFORMS TO CLASS "B" REQUIREMENTS OF COSMETIC SPECIFICATION PS-45499-002.
8. PART IS NOY DESIGNATED FOR CURRENT SHARING.
9. CONNECTORS ARE NOT TO BE MATED OR UNMATED WHILE CIRCUITS ARE LIVE.
10. WIRES ARE TO BE DRESSED IN SUCH A MANNER TO ALLOW THE TERMINALS TO FLOAT FREELY IN THE POCKET.
11. TEXT ON PART IS FOR REFERENCE ONLY.TEXT AND TEXT LOCATION MAY VARY DEPENDING ON PART NUMBER AND /OR TOOL.
12. BUBBLE IS ACCEPTABLEON LATCH AREA.

CKT SIZE	DIM A
2	.378/(9.60)
4	.709/(18.00)
5	.874/22.20)
6	1.039/(26.40)

PART NUMBER	ENG. NUMBER	CKT. SIZE	MATERIAL(SEE NOTE 1.)
39-01-4020	5557-02R2	2	94V-2
39-01-4021	5557-02R2-210	2	94V-0
39-01-4040	5557-04R2	4	94V-2
39-01-4041	5557-04R2-210	4	94V-0
46999-0503	5557-04R2-400	4	94V-0
39-01-4050	5557-05R2	5	94V-2
39-01-4051	5557-05R2-210	5	94V-0
50-30-4447	5557-05R2-400	5	94V-0
39-01-4060	5557-06R2	6	94V-2
39-01-4061	5557-06R2-210	6	94V-0

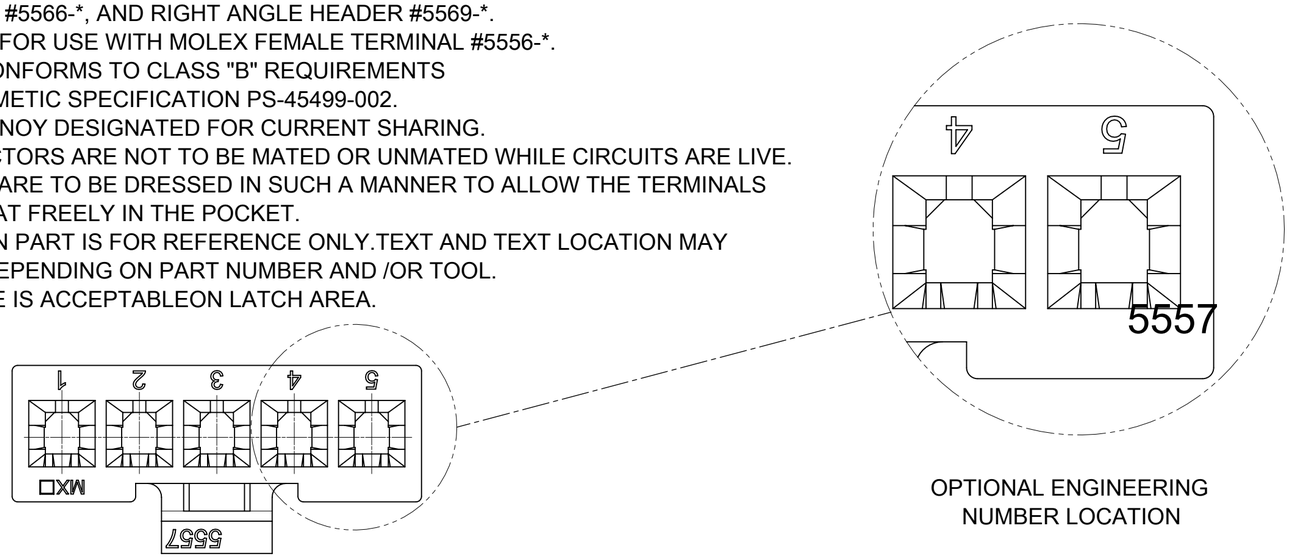

OPTIONAL ENGINEERING NUMBER LOCATION

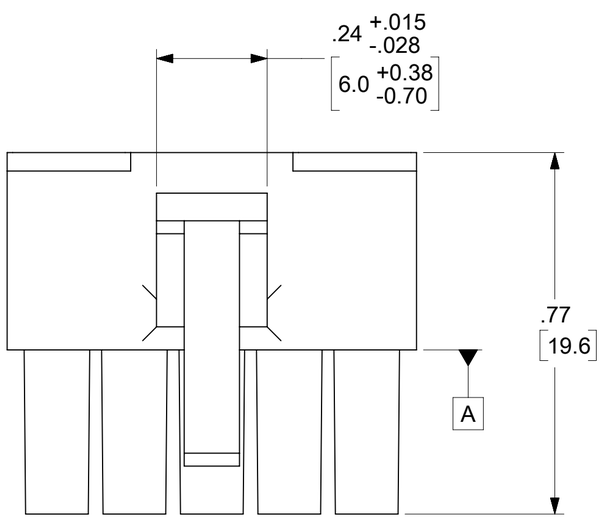

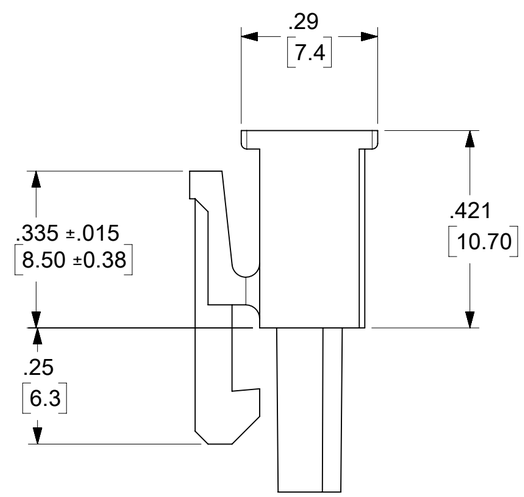

LEGEND:

5557 - ** R2 -*** - **

CKT SIZE: (02,04-06)

RECEPTACLE: (SINGLE ROW)

MATERIAL OPTION: (SEE NOTE1)

COLOR:
"BLANK"=NATURAL
"BL"=BLACK

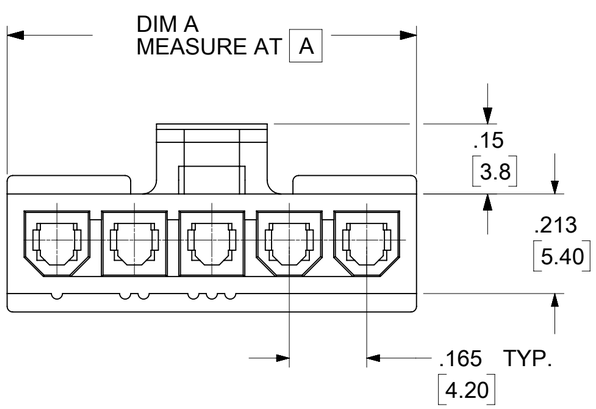

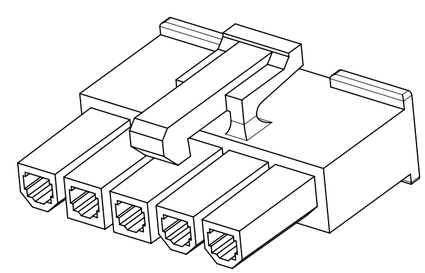

THIS DRAWING REPLACES DRAWING SD-5557-NR2*

THIS DRAWING CONTAINS INFORMATION THAT IS PROPRIETARY TO MOLEX ELECTRONIC TECHNOLOGIES, LLC AND SHOULD NOT BE USED WITHOUT WRITTEN PERMISSION

DIMENSION UNITS	SCALE
INCH/MM	NTS

GENERAL TOLERANCES (UNLESS SPECIFIED)

	MM	INCH
4 PLACES	±	±
3 PLACES	±	± 0.01
2 PLACES	± 0.25	± 0.015
1 PLACE	± 0.38	±
0 PLACES	±	±
ANGULAR TOL	± 0.5 °	

DRAFT WHERE APPLICABLE MUST REMAIN WITHIN DIMENSIONS

CURRENT REV DESC: RE- MASTERED THE DRAWING USING 55570520 MODEL,

EC NO: 778837
DRWN: LIKITV 2024/02/01
CHK'D: XQZHANG 2024/03/04
APPR: XQZHANG 2024/03/04

INITIAL REVISION:
DRWN: KSS 2/15/89
APPR: FSMITH 2012/05/04

THIRD ANGLE PROJECTION | DRAWING: C-SIZE | SERIES: 5557

molex

MINI-FIT JR. RECEPTACLE
SINGLE ROW

PRODUCT CUSTOMER DRAWING

DOCUMENT NUMBER	DOC TYPE	DOC PART	REVISION
55570002-SD	PSD	000	A2

MATERIAL NUMBER	CUSTOMER	SHEET NUMBER
SEE CHART	GENERAL MARKET	1 OF 1

DOCUMENT STATUS	P1	RELEASE DATE	2024/03/04 02:00:19

FORMAT: Eng-legs-master-lb-pro3-C
REVISION: E1
DATE: 2021/05/01