THIS DRAWING IS UNPUBLISHED. RELEASED FOR PUBLICATION
© COPYRIGHT ALL RIGHTS RESERVED.

LOC	DIST
DS	

REVISIONS

P	LTR	DESCRIPTION	DATE	DWN	APVD
	C	REVISED (ECR-13-007729)	09MAY13	SJ	HG
	D	REVISED (ECR-14-000406)	14JUL14	SJ	HG
	D1	REVISED (ECR-16-005527)	14APR16	SJ	JW

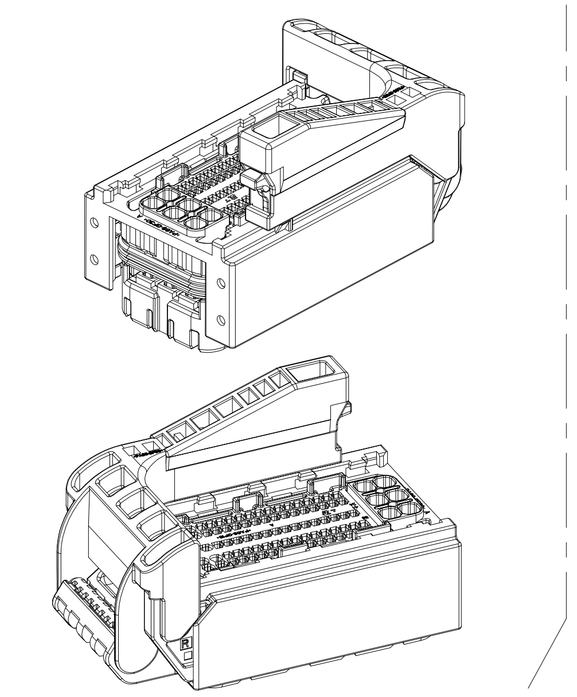

ISO VIEW
(SCALE 1:1)

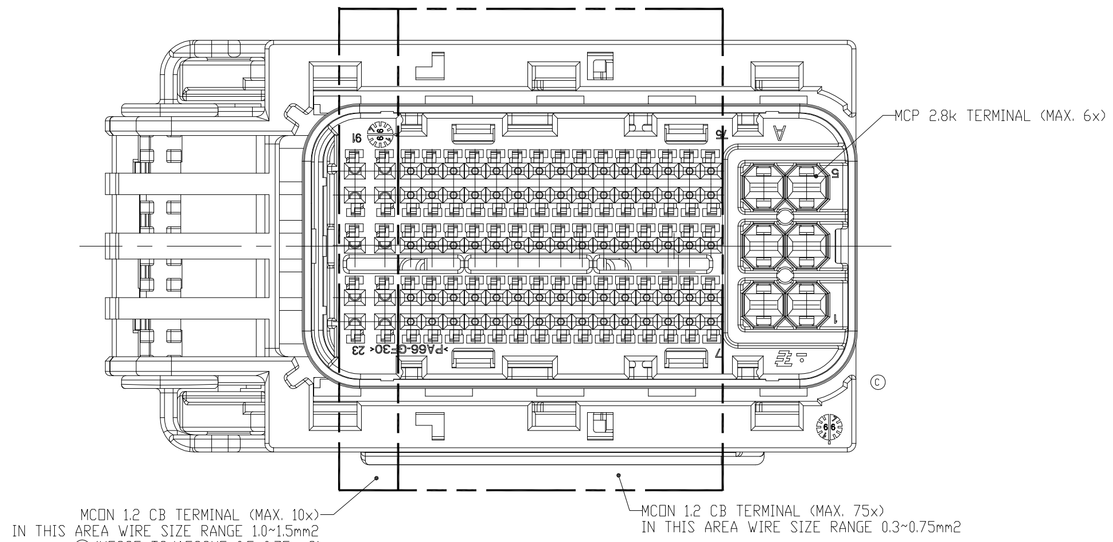

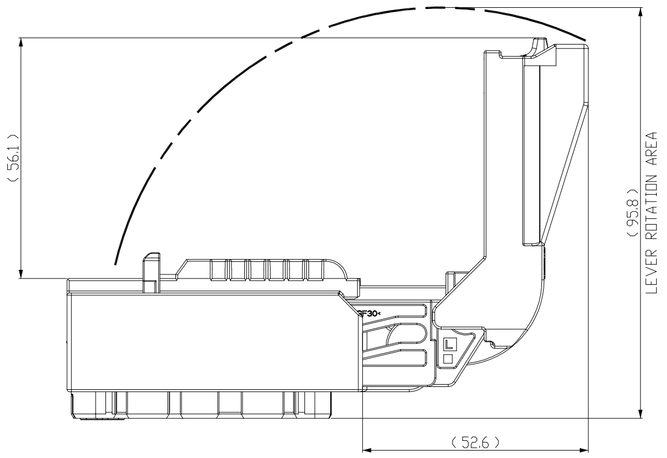

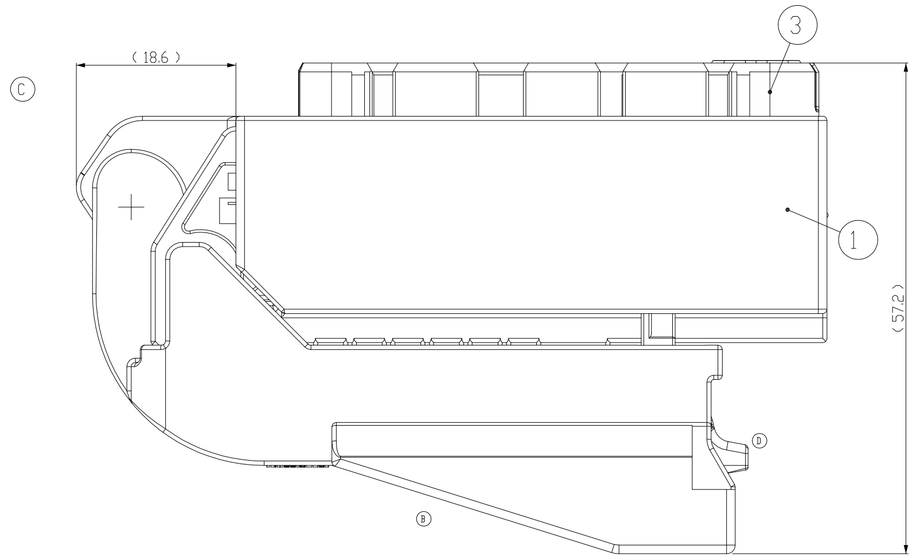

NOTE
1. GENERAL TOLERANCE: ±0.3 ±3°
2. DELIVERY CONDITION : CLOSED LEVER POSITION
3. APPLICABLE RETAINER HSG : 2005471-6 (1.2mm CB), 2005472-6 (MCP 2.8mm)
4. APPLICABLE COVER HSG: 2005480, 2005481, 2005563, 2005564, 2109179, 2109180
5. TERMINALS AND TABS MUST HAVE THE SAME SURFACE PLATING MATERIAL
6. PARTS MUST BE ORDERED SEPARATLY FROM THE SUPPLIER
7. UNOCCUFIED CHAMBERS ARE TO CLOSE WITH BLIND PLUG
APPLICABLE BLIND PLUG: 1-1452424-1(2109258-4) : (0.5~0.75mm2)
1-1452424-2(1-2109258-8) : (1.0~1.5mm2)

APPLICATION OF 4 TYPE LEVER

0-2005465-2

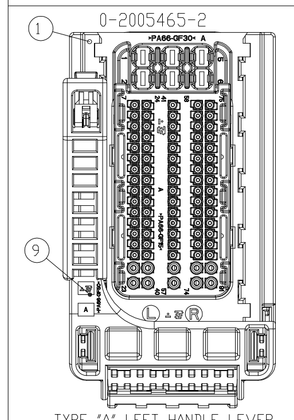

TYPE "A" LEFT HANDLE LEVER

1-2005465-2

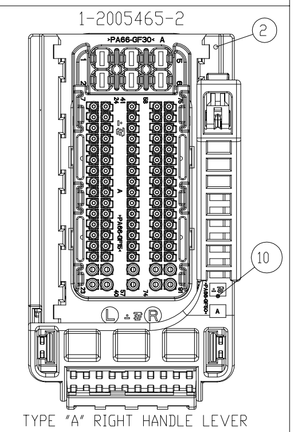

TYPE "A" RIGHT HANDLE LEVER

2-2005465-2

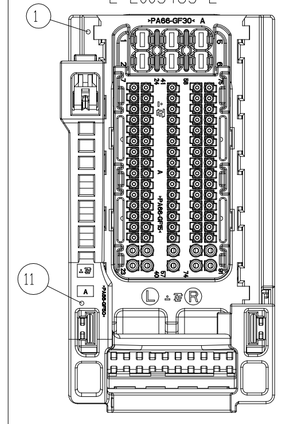

TYPE "B" LEFT HANDLE LEVER

3-2005465-2

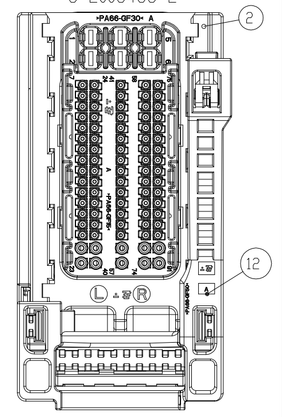

TYPE "B" RIGHT HANDLE LEVER

4-2005465-2

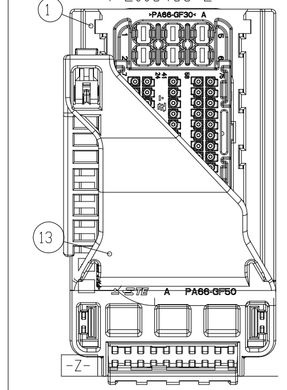

TYPE "D" LEFT HANDLE LEVER

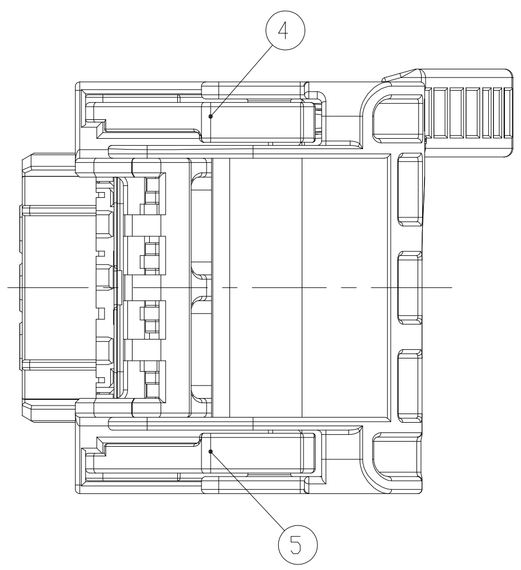

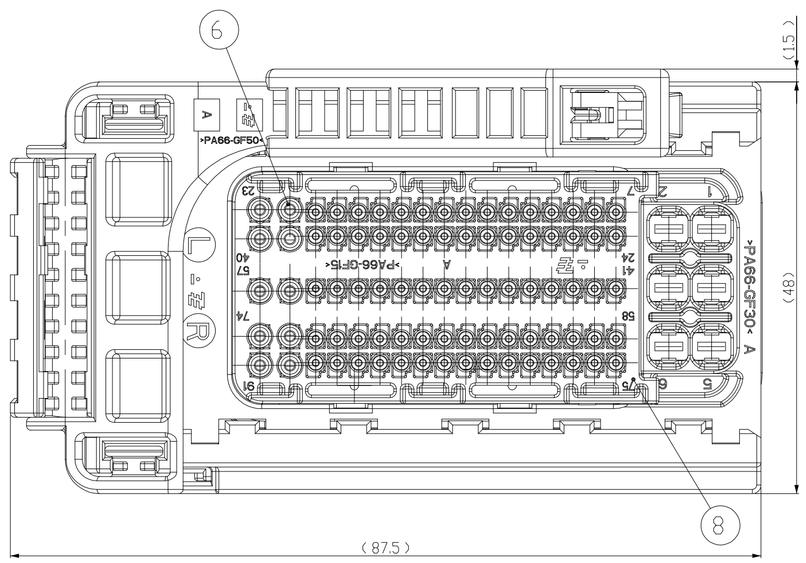

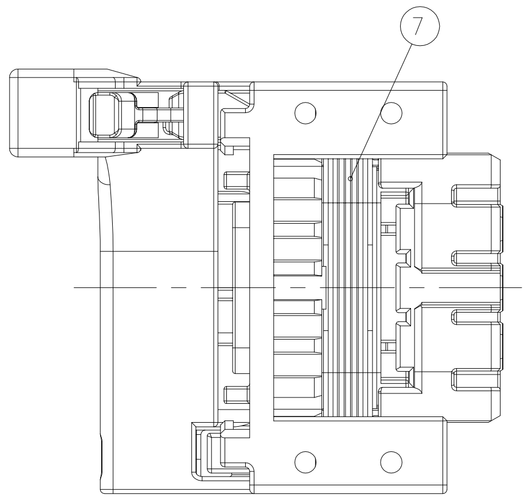

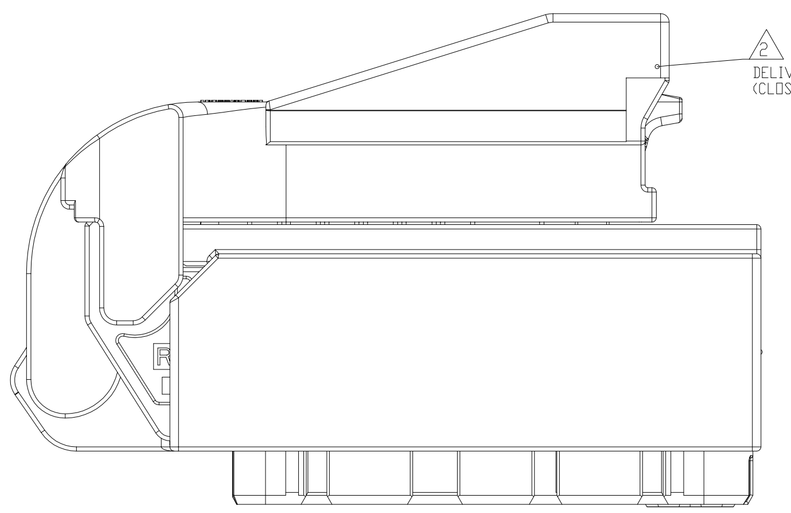

CONTACT	MCON 1.2mm CLEAN BODY CONTACT		
P/N	(R) 1534594-1 (2005544-1)	(R) 1670144-1 (2005545-1)	(R) 1452503-1 (2005546-1)
WIRE SIZE(mm2)	0.3~0.35	0.5~0.75	1.0~1.5 (AEX 0.85f)
INSULATION DIA (mm)	Ø 1.4~ Ø 1.9		Ø 1.9~ Ø 2.4

CONTACT	MCP 2.8mm K CONTACT		
P/N	1241394-1	1241396-1	
WIRE SIZE(mm2)	0.5~1.0	1.0~2.5	
INSULATION DIA (mm)	Ø 1.4~ Ø 2.7	Ø 2.2~ Ø 3.0	
SINGLE WIRE SEAL (mm)	828904-1 (Ø 1.2~ Ø 2.1)	828905-1 (Ø 2.2~ Ø 3.0)	1897826-1 (Ø 2.8~ Ø 3.0)

ND	COLOR	MATERIAL	DESCRIPTION	Q'TY				
				ASSY P/N	0-2005465-2	1-2005465-2	2-2005465-2	3-2005465-2	4-2005465-2
13	BLACK	PA66-GF50	LEVER TYPE-D HSG(LH)	-	-	-	-	1
12	BLACK		LEVER TYPE-B HSG(RH)	-	-	-	1	-
11	BLACK		LEVER TYPE-B HSG(LH)	-	-	1	-	-
10	BLACK		LEVER TYPE-A HSG(RH)	-	1	-	-	-
9	BLACK		LEVER TYPE-A HSG(LH)	1	-	-	-	-
8	BLACK	PA66-GF15	91P SEAL HOLDER HSG	1	1	1	1	1
7	BROWN	SILICONE	INNER SEAL	1	1	1	1	1
6	NATURAL	SILICONE	91P FAMILY SEAL	1	1	1	1	1
5	BLACK	PA66-GF30	RH SLIDE HSG	1	1	1	1	1
4	BLACK	PA66-GF30	LH SLIDE HSG	1	1	1	1	1
3	BLACK	PA66-GF30	91P FRONT CAVITY HSG	1	1	1	1	1
2	BLACK	PA66-GF30	91P MAIN BODY HSG (RH)	-	1	-	1	-
1	BLACK	PA66-GF30	91P MAIN BODY HSG (LH)	1	-	1	-	1

THIS DRAWING IS A CONTROLLED DOCUMENT.

DIMENSIONS: mm
3RD ANGLE PROJECTION
TOLERANCES UNLESS OTHERWISE SPECIFIED: 0 PLC ±, 1 PLC ±, 2 PLC ±, 3 PLC ±, 4 PLC ±, ANGLES ± — SEE NOTE
MATERIAL: SEE TABLE
FINISH: N/A

DWN: SJ CHOI
CHK: SJ CHOI
APVD: JW JUNG
PRODUCT SPEC:
APPLICATION SPEC:
WEIGHT:

TE Connectivity

NAME: PCU SEALED 91P PLUG ASSY

SIZE	CAGE CODE	DRAWING NO	RESTRICTED TO
A1	00779	C-2005465	

CUSTOMER DRAWING | SCALE 2:1 | SHEET 1 OF 1 | REV D1

4805 (3/11)