High Reliability Surface Mount Capacitors, MIL-PRF-32535, 4 – 200 VDC (C0G and BP Dielectrics)

KEMET a YAGEO company

Overview

The KEMET MIL-PRF-32535 C0G and BP surface mount capacitors are designed, tested and screened to meet demanding high reliability defense and aerospace applications. MIL-PRF-32535 is Defense Logistics Agency's (DLA) first capacitor specification for defense and aerospace that capitalizes on industry leading base metal electrode (BME) technology. Qualified under performance specification MIL-PRF-32535 and QPL listed, this series meets or exceeds the requirements outlined by DLA and is currently available in M (standard reliability) and T (high reliability) product levels. Driven by the demand for higher capacitance and smaller case size MLCCs in high reliability applications, KEMET's MIL-PRF-32535 C0G and BP provides over an 18-fold increase in capacitance over MIL-PRF-55681 and MIL-PRF-123, allowing for reduced board space and continuing the trend for miniaturization.

In addition to being the first BME C0G and BP dielectric qualified for use in defense and aerospace applications, MIL-PRF-32535 is the first DLA specification to recognize a flexible termination option. KEMET's flexible termination utilizes a pliable and conductive silver epoxy between the base metal and nickel barrier layers of the termination system. The addition of this epoxy layer inhibits the transfer of board stress to the rigid ceramic body, therefore mitigating flex cracks, which can result in a low IR or short circuit failures..

Benefits

- Patented BME technology
- Qualified per MIL-PRF-32535 (QPL)
- Standard reliability (M Level)
- High reliability (T Level)
- Flexible termination option available
- EIA 0402, 0603, 0805, 1206, 1210, 1812, 2220 case sizes
- DC voltage ratings of 4 V, 6.3 V, 10 V, 16 V, 25 V, 50 V, 100 V and 200 V
- Capacitance offerings ranging from 1.0 pF up to 180 nF
- Available capacitance tolerances of ±0.10 pF, ±0.25 pF, ±0.5 pF, ±1%, ±2%, ±5%, and 10%
- No piezoelectric noise
- Extremely low ESR and ESL
- High ripple current capability
- Preferred capacitance solution at line frequencies and into the MHz range
- No capacitance change with respect to applied rated DC voltage
- Negligible capacitance change with respect to temperature from −55°C to +125°C
- No capacitance decay with time
- Non-polar device, minimizing installation concerns

© KEMET Electronics Corporation • One East Broward Boulevard
Fort Lauderdale, FL 33301 USA • 954-766-2800 • www.kemet.com

Applications

- Critical timing
- Tuning
- Circuits requiring low loss
- Circuits with pulse
- High current
- Decoupling
- Bypass
- Filtering
- Transient voltage suppression
- Blocking

MIL-PRF-32535 Ordering Information

M32535	04	E1	Z	103	J	Z	M	B
MIL Prefix	Slash Sheet	Characteristic/ Dielectric	Rated Voltage (VDC)	Capacitance Code (pF)	Capacitance Tolerance	Termination[1, 2]	Product Level	Electrode
	02 = 0402 03 = 0603 04 = 0805 05 = 1206 06 = 1210 07 = 1812 08 = 2220	E1 = C0G BP = BP	V = 4 W = 6.3 X = 10 Y = 16 Z = 25 A = 50 B = 100 C = 200	Two significant digits and number of zeros. Use R as decimal for 1.0 – 9.9 pF e.g., 2.2 pF = 2R2	B = ±0.1 pF C = ±0.25 pF D = ±0.5 pF F = ±1% G = ±2% J = ±5% K = ±10%	D = Sn/Pb solder dipped G = Nickel gold-plating R = Flexible termination with solder plating V = Flexible termination with nickel gold-plating Z = Sn/Pb solder plated	M = M Level T = T Level	B = BME

[1] *Termination options D, R, and V are not available in EIA 0402 case size.*
[2] *Termination option D is not available in EIA 0603 case size.*

KEMET Part Number Equivalent (For Reference Only)

(Do not use this ordering code if a QPL MIL-SPEC part type is required. Please order using MIL-SPEC ordering code. Details regarding MIL-PRF-32535 QPL ordering information is outlined above.)

C	0805	K	104	J	3	G	M	L	-
Ceramic	Case Size (L" x W")	Specification/ Series	Capacitance Code (pF)	Capacitance Tolerance[2]	Rated Voltage (VDC)	Dielectric	Product Level	Termination Finish	Packaging/ Grade (C-Spec)
	0402 0603 0805 1206 1210 1812 2220	K = MIL-PRF-32535	Two significant digits and number of zeros. Use 9 for 1.0 – 9.9 pF e.g., 2.2 pF = 229	B = ±0.1 pF C = ±0.25 pF D = ±0.5 pF F = ±1% G = ±2% J = ±5% K = ±10%	7 = 4 9 = 6.3 8 = 10 4 = 16 3 = 25 5 = 50 1 = 100 2 = 200	E = C0G G = BP	M = M Level, standard termination N = M Level, flexible termination T = T Level, standard termination V = T Level, flexible termination	L = Sn/Pb solder plated H = Sn/Pb solder dipped G = Nickel gold-plating	See "Packaging C-Spec Ordering Options Table"

Packaging C-Spec Ordering Options Table

Packaging Type[1]	Packaging/Grade Ordering Code (C-Spec)
Standard Packaging (Waffle Tray)	Not required (blank)
7" Tape & Reel	Contact Sales

[1] Default packaging with no C-Spec is "Waffle Tray," and is recommended for order quantities of less than 250 pieces. See Waffle Tray packaging information section for additional details.
[1] See Tape & Reel Packaging information section of the datasheet for additional details.

Dimensions per MIL-PRF-32535 – Inches (Millimeters)

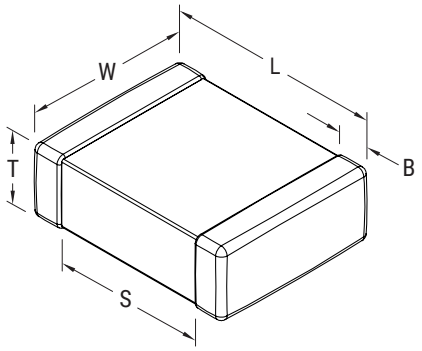

EIA Size Code	Metric Size Code	L Length	W Width	T Thickness (Max)	B Bandwidth	Maximum Part Weight (mg)[5]	Mounting Technique
0402[1]	1005	0.040 +0.006/-0.004 (1.02 +0.15/-0.10)	0.020 +0.005/-0.004 (0.51 +0.13/-0.10)	0.025 (0.64)	0.004 (0.100) minimum	1.6	Solder reflow only
0603[2]	1608	0.063 +0.008/-0.006 (1.60 +0.20/-0.15)	0.032 +0.008/-0.006 (0.81 +0.20/-0.15)	0.040 (1.02)	0.016±0.008 (0.41±0.20)	6.3	Solder wave or solder reflow
0805[2]	2012	0.079 +0.012/-0.010 (2.01 +0.30/-0.25)	0.050 +0.012/-0.010 (1.27 +0.30/-0.25)	0.062 (1.57)	0.020±0.010 (0.51±0.25)	20	
1206[3]	3216	0.126 +0.012/-0.010 (3.20 +0.30/-0.25)	0.063 +0.012/-0.010 (1.60 +0.30/-0.25)	0.071 (1.80)	0.020±0.014 (0.51±0.36)	57	
1210[4]	3225	0.126+0.012/-0.010 (3.20+0.30/-0.25)	0.098+0.012/-0.010 (2.49+0.30/-0.25)	0.110 (2.79)	0.020±0.014 (0.51±0.36)	108	Solder reflow only
1812[3]	4532	0.178±0.012 (4.52±0.30)	0.126±0.012 (3.20±0.30)	0.110 (2.79)	0.024±0.018 (0.61±0.46)	216	
2220[3]	5650	0.224±0.016 (5.69±0.41)	0.197±0.016 (5.00±0.41)	0.110 (2.79)	0.025±0.018 (0.64±0.46)	430	

[1] For EIA 0402 minimum spacing between metalized end terminals is 0.010 (0.25).
[2] For EIA 0603 and 0805 solder dipped termination finish, add 0.020 (0.51) to the positive length tolerance and 0.015 (0.38) to the positive width and thickness tolerance.
[3] For EIA 1206, 1812 and 2220 solder dipped termination finishes, add 0.025 (0.64) to the positive length tolerance and 0.015 (0.38) to the positive width and thickness tolerance.
[4] For EIA 1210 solder dipped termination finishes, add 0.020 (0.51) to the positive length tolerance and 0.015 (0.38) to the positive width and thickness tolerance.
[5] Max Part Weight represents the maximum weight in the given case size for all voltages.

Environmental Compliance

These devices are RoHS compliant only if ordered with gold (Au) termination finish.

Electrical Parameters/Characteristics

Item	Parameters/Characteristics
Operating temperature range	−55°C to +125°C
Capacitance change with reference to +25°C and 0 VDC applied (TCC)	±30 ppm/°C
Aging rate (maximum % capacitance loss/decade hour)	0%
[1]Dielectric Withstanding Voltage (DWV)	250% of rated voltage (5 ±1 seconds and charge/discharge not exceeding 50 mA)
[2]Dissipation Factor (DF) maximum limit at 25°C	Cap < 10 pF: 0.25% Cap ≥ 10 pF: 0.15%
[3]Insulation Resistance (IR) minimum limit at 25°C	Rated voltage < 25 V 500 MΩ µFs or 100 GΩ, whichever is less Rated voltage ≥ 25 V 1,000 MΩ µF or 100 GΩ, whichever is less (Rated voltage applied for 120 seconds maximum at 25°C)

[1] DWV is the voltage a capacitor can withstand (survive) for a short period of time. It exceeds the nominal and continuous working voltage of the capacitor.

[2] Capacitance and dissipation factor (DF) measured under the following conditions:
1 MHz ±100 kHz and 1.0 V_{rms} ±0.2 V if capacitance ≤ 1,000 pF
1 kHz ±50 Hz and 1.0 V_{rms} ±0.2 V if capacitance > 1,000 pF

[3] To obtain IR limit, divide MΩ-µF value by the capacitance and compare to GΩ limit. Select the lower of the two limits.

Capacitance and dissipation factor (DF) measured under the following conditions:

Note: When measuring capacitance it is important to ensure the set voltage level is held constant. The HP4284 and Agilent E4980 have a feature known as automatic level control (ALC). The ALC feature should be switched to "ON."

Table 1A – Capacitance Range/Selection Waterfall (0402 – 0805 Case Sizes)

Capacitance	Cap Code (MIL-PRF-32535 Part Number)	Cap Code (KEMET Part Number)	Case Size	0402							0603								0805							
			Voltage Code (MIL)	V	W	X	Y	Z	A	B	V	W	X	Y	Z	A	B	C	V	W	X	Y	Z	A	B	C
			Voltage Code (KEMET)	7	9	8	4	3	5	1	7	9	8	4	3	5	1	2	7	9	8	4	3	5	1	2
			Rated Voltage (VDC)	4	6.3	10	16	25	50	100	4	6.3	10	16	25	50	100	200	4	6.3	10	16	25	50	100	200
			Capacitance Tolerance	Product Availability																						
1 pF	1R0	109	B C D								•	•	•	•	•	•	•	•	•	•	•	•	•	•	•	•
1.5 pF	1R5	159	B C D								•	•	•	•	•	•	•	•	•	•	•	•	•	•	•	•
2.2 pF	2R2	229	B C D								•	•	•	•	•	•	•	•	•	•	•	•	•	•	•	•
2.7 pF	2R7	279	B C D								•	•	•	•	•	•	•	•	•	•	•	•	•	•	•	•
3.3 pF	3R3	339	B C D								•	•	•	•	•	•	•	•	•	•	•	•	•	•	•	•
3.9 pF	3R9	399	B C D								•	•	•	•	•	•	•	•	•	•	•	•	•	•	•	•
4.7 pF	4R7	479	B C D								•	•	•	•	•	•	•	•	•	•	•	•	•	•	•	•
5.6 pF	5R6	569	B C D								•	•	•	•	•	•	•	•	•	•	•	•	•	•	•	•
6.8 pF	6R8	689	B C D								•	•	•	•	•	•	•	•	•	•	•	•	•	•	•	•
8.2 pF	8R2	829	B C D								•	•	•	•	•	•	•	•	•	•	•	•	•	•	•	•
10 pF	100	100	F G J K	•	•	•	•	•	•	•	•	•	•	•	•	•	•	•	•	•	•	•	•	•	•	•
12 pF	120	120	F G J K	•	•	•	•	•	•	•	•	•	•	•	•	•	•	•	•	•	•	•	•	•	•	•
15 pF	150	150	F G J K	•	•	•	•	•	•	•	•	•	•	•	•	•	•	•	•	•	•	•	•	•	•	•
18 pF	180	180	F G J K	•	•	•	•	•	•	•	•	•	•	•	•	•	•	•	•	•	•	•	•	•	•	•
20 pF	200	200	F G J K								•	•	•	•	•	•	•	•	•	•	•	•	•	•	•	•
22 pF	220	220	F G J K	•	•	•	•	•	•	•	•	•	•	•	•	•	•	•	•	•	•	•	•	•	•	•
27 pF	270	270	F G J K	•	•	•	•	•	•	•	•	•	•	•	•	•	•	•	•	•	•	•	•	•	•	•
33 pF	330	330	F G J K	•	•	•	•	•	•	•	•	•	•	•	•	•	•	•	•	•	•	•	•	•	•	•
39 pF	390	390	F G J K	•	•	•	•	•	•	•	•	•	•	•	•	•	•	•	•	•	•	•	•	•	•	•
47 pF	470	470	F G J K	•	•	•	•	•	•	•	•	•	•	•	•	•	•	•	•	•	•	•	•	•	•	•
56 pF	560	560	F G J K	•	•	•	•	•	•	•	•	•	•	•	•	•	•	•	•	•	•	•	•	•	•	•
68 pF	680	680	F G J K	•	•	•	•	•	•	•	•	•	•	•	•	•	•	•	•	•	•	•	•	•	•	•
82 pF	820	820	F G J K	•	•	•	•	•	•	•	•	•	•	•	•	•	•	•	•	•	•	•	•	•	•	•
100 pF	101	101	F G J K	•	•	•	•	•	•	•	•	•	•	•	•	•	•		•	•	•	•	•	•	•	•
120 pF	121	121	F G J K	•	•	•	•	•	•	•	•	•	•	•	•	•	•		•	•	•	•	•	•	•	•
150 pF	151	151	F G J K	•	•	•	•	•	•	•	•	•	•	•	•	•	•		•	•	•	•	•	•	•	•
180 pF	181	181	F G J K	•	•	•	•	•	•	•	•	•	•	•	•	•	•		•	•	•	•	•	•	•	•
220 pF	221	221	F G J K	•	•	•	•	•	•	•	•	•	•	•	•	•	•		•	•	•	•	•	•	•	•
270 pF	271	271	F G J K	•	•	•	•	•	•	•	•	•	•	•	•	•	•		•	•	•	•	•	•	•	•
330 pF	331	331	F G J K	•	•	•	•	•	•	•	•	•	•	•	•	•	•		•	•	•	•	•	•	•	•
390 pF	391	391	F G J K	•	•	•	•	•	•		•	•	•	•	•	•	•		•	•	•	•	•	•	•	•
470 pF	471	471	F G J K	•	•	•	•	•	•		•	•	•	•	•	•	•		•	•	•	•	•	•	•	•
560 pF	561	561	F G J K	•	•	•	•	•	•		•	•	•	•	•	•	•		•	•	•	•	•	•	•	
680 pF	681	681	F G J K	•	•	•	•	•	•		•	•	•	•	•	•	•		•	•	•	•	•	•	•	
820 pF	821	821	F G J K	•	•	•	•	•			•	•	•	•	•	•	•		•	•	•	•	•	•	•	
1,000 pF	102	102	F G J K	•	•	•	•	•			•	•	•	•	•	•	•		•	•	•	•	•	•	•	
1,200 pF	122	122	F G J K								•	•	•	•	•	•	•		•	•	•	•	•	•	•	
1,500 pF	152	152	F G J K								•	•	•	•	•	•	•		•	•	•	•	•	•	•	
1,800 pF	182	182	F G J K								•	•	•	•	•	•	•		•	•	•	•	•	•	•	
2,000 pF	202	202	F G J K								•	•	•	•	•	•	•		•	•	•	•	•	•	•	
2,200 pF	222	222	F G J K								•	•	•	•	•	•	•		•	•	•	•	•	•	•	
2,700 pF	272	272	F G J K								•	•	•	•	•	•			•	•	•	•	•	•	•	
3,300 pF	332	332	F G J K								•	•	•	•	•	•			•	•	•	•	•	•	•	
3,900 pF	392	392	F G J K								•	•	•	•	•	•			•	•	•	•	•	•	•	
4,700 pF	472	472	F G J K								•	•	•	•	•				•	•	•	•	•	•	•	
5,600 pF	562	562	F G J K								•	•	•	•	•				•	•	•	•	•	•	•	
6,800 pF	682	682	F G J K																•	•	•	•	•	•	•	
8,200 pF	822	822	F G J K																•	•	•	•	•	•	•	
10,000 pF	103	103	F G J K																•	•	•	•	•			
Capacitance	Cap Code (MIL-PRF-32535 Part Number)	Cap Code (KEMET Part Number)	Rated Voltage (VDC)	4	6.3	10	16	25	50	100	4	6.3	10	16	25	50	100	200	4	6.3	10	16	25	50	100	200
			Voltage Code	7	9	8	4	3	5	1	7	9	8	4	3	5	1	2	7	9	8	4	3	5	1	2
			Case Size/Series	0402							0603								0805							

Table 1B – Capacitance Range/Selection Waterfall (1206 – 1210 Case Sizes)

Capacitance	Cap Code (MIL-PRF-32535 Part Number)	Cap Code (KEMET Part Number)	Case Size				1206								1210							
			Voltage Code (MIL)				V	W	X	Y	Z	A	B	C	V	W	X	Y	Z	A	B	C
			Voltage Code (KEMET)				7	9	8	4	3	5	1	2	7	9	8	4	3	5	1	2
			Rated Voltage (VDC)				4	6.3	10	16	25	50	100	200	4	6.3	10	16	25	50	100	200
							Product Availability and Chip Thickness Codes See Table 2 for Chip Thickness Dimensions															
560 pF	561	561	F	G	J	K	•	•	•	•	•	•	•	•								
680 pF	681	681	F	G	J	K	•	•	•	•	•	•	•	•								
820 pF	821	821	F	G	J	K	•	•	•	•	•	•	•	•								
1,000 pF	102	102	F	G	J	K	•	•	•	•	•	•	•	•								
1,200 pF	122	122	F	G	J	K	•	•	•	•	•	•	•	•	•	•	•	•	•	•	•	•
1,500 pF	152	152	F	G	J	K	•	•	•	•	•	•	•	•	•	•	•	•	•	•	•	•
1,800 pF	182	182	F	G	J	K	•	•	•	•	•	•	•	•	•	•	•	•	•	•	•	•
2,000 pF	202	202	F	G	J	K									•	•	•	•	•	•	•	•
2,200 pF	222	222	F	G	J	K	•	•	•	•	•	•	•		•	•	•	•	•	•	•	•
2,700 pF	272	272	F	G	J	K	•	•	•	•	•	•	•		•	•	•	•	•	•	•	•
3,300 pF	332	332	F	G	J	K	•	•	•	•	•	•	•		•	•	•	•	•	•	•	•
3,900 pF	392	392	F	G	J	K	•	•	•	•	•	•	•		•	•	•	•	•	•	•	
4,700 pF	472	472	F	G	J	K	•	•	•	•	•	•	•		•	•	•	•	•	•	•	
5,600 pF	562	562	F	G	J	K	•	•	•	•	•	•	•		•	•	•	•	•	•	•	
6,800 pF	682	682	F	G	J	K	•	•	•	•	•	•	•		•	•	•	•	•	•	•	
8,200 pF	822	822	F	G	J	K	•	•	•	•	•	•	•		•	•	•	•	•	•	•	
10,000 pF	103	103	F	G	J	K	•	•	•	•	•	•	•		•	•	•	•	•	•	•	
12,000 pF	123	123	F	G	J	K	•	•	•	•	•	•	•		•	•	•	•	•	•	•	
15,000 pF	153	153	F	G	J	K	•	•	•	•	•	•	•		•	•	•	•	•	•	•	
18,000 pF	183	183	F	G	J	K	•	•	•	•	•	•	•		•	•	•	•	•	•	•	
22,000 pF	223	223	F	G	J	K	•	•	•	•	•				•	•	•	•	•	•	•	
27,000 pF	273	273	F	G	J	K	•	•	•	•	•				•	•	•	•	•	•	•	
33,000 pF	333	333	F	G	J	K									•	•	•	•	•	•	•	
39,000 pF	393	393	F	G	J	K									•	•	•	•	•			
47,000 pF	473	473	F	G	J	K									•	•	•	•	•			
Capacitance	Cap Code (MIL-PRF-32535 Part Number)	Cap Code (KEMET Part Number)	Rated Voltage (VDC)				4	6.3	10	16	25	50	100	200	4	6.3	10	16	25	50	100	200
			Voltage Code				7	9	8	4	3	5	1	2	7	9	8	4	3	5	1	2
			Case Size/Series				1206								1210							

Table 1C – Capacitance Range/Selection Waterfall (1812 – 2220 Case Sizes)

Capacitance	Cap Code (MIL-PRF-32535 Part Number)	Cap Code (KEMET Part Number)	Case Size				1812								2220							
			Voltage Code (MIL)				V	W	X	Y	Z	A	B	C	V	W	X	Y	Z	A	B	C
			Voltage Code (KEMET)				7	9	8	4	3	5	1	2	7	9	8	4	3	5	1	2
			Rated Voltage (VDC)				4	6.3	10	16	25	50	100	200	4	6.3	10	16	25	50	100	200
			Capacitance Tolerance				Product Availability															
1,000 pF	102	102	F	G	J	K	•	•	•	•	•	•	•	•	•	•	•	•	•	•	•	•
1,200 pF	122	122	F	G	J	K	•	•	•	•	•	•	•	•	•	•	•	•	•	•	•	•
1,500 pF	152	152	F	G	J	K	•	•	•	•	•	•	•	•	•	•	•	•	•	•	•	•
1,800 pF	182	182	F	G	J	K	•	•	•	•	•	•	•	•	•	•	•	•	•	•	•	•
2,000 pF	202	202	F	G	J	K																
2,200 pF	222	222	F	G	J	K	•	•	•	•	•	•	•	•	•	•	•	•	•	•	•	•
2,700 pF	272	272	F	G	J	K	•	•	•	•	•	•	•	•	•	•	•	•	•	•	•	•
3,300 pF	332	332	F	G	J	K	•	•	•	•	•	•	•	•	•	•	•	•	•	•	•	•
3,900 pF	392	392	F	G	J	K	•	•	•	•	•	•	•	•	•	•	•	•	•	•	•	•
4,700 pF	472	472	F	G	J	K	•	•	•	•	•	•	•	•	•	•	•	•	•	•	•	•
5,600 pF	562	562	F	G	J	K	•	•	•	•	•	•	•	•	•	•	•	•	•	•	•	•
6,800 pF	682	682	F	G	J	K	•	•	•	•	•	•	•	•	•	•	•	•	•	•	•	•
8,200 pF	822	822	F	G	J	K	•	•	•	•	•	•	•		•	•	•	•	•	•	•	•
10,000 pF	103	103	F	G	J	K	•	•	•	•	•	•	•		•	•	•	•	•	•	•	•
12,000 pF	123	123	F	G	J	K	•	•	•	•	•	•	•		•	•	•	•	•	•	•	•
15,000 pF	153	153	F	G	J	K	•	•	•	•	•	•	•		•	•	•	•	•	•	•	•
18,000 pF	183	183	F	G	J	K	•	•	•	•	•	•	•		•	•	•	•	•	•	•	•
22,000 pF	223	223	F	G	J	K	•	•	•	•	•	•	•		•	•	•	•	•	•	•	•
27,000 pF	273	273	F	G	J	K	•	•	•	•	•	•	•		•	•	•	•	•	•	•	•
33,000 pF	333	333	F	G	J	K	•	•	•	•	•	•	•		•	•	•	•	•	•	•	
39,000 pF	393	393	F	G	J	K	•	•	•	•	•	•	•		•	•	•	•	•	•	•	
47,000 pF	473	473	F	G	J	K	•	•	•	•	•	•	•		•	•	•	•	•	•	•	
56,000 pF	563	563	F	G	J	K	•	•	•	•	•	•	•		•	•	•	•	•	•	•	
68,000 pF	683	683	F	G	J	K	•	•	•	•	•	•			•	•	•	•	•	•	•	
82,000 pF	823	823	F	G	J	K	•	•	•	•	•				•	•	•	•	•	•	•	
100,000 pF	104	104	F	G	J	K	•	•	•	•	•				•	•	•	•	•	•	•	
120,000 pF	124	124	F	G	J	K									•	•	•	•	•	•		
150,000 pF	154	154	F	G	J	K									•	•	•	•	•	•		
180,000 pF	184	184	F	G	J	K									•	•	•	•	•			
Capacitance	Cap Code (MIL-PRF-32535 Part Number)	Cap Code (KEMET Part Number)	Rated Voltage (VDC)				4	6.3	10	16	25	50	100	200	4	6.3	10	16	25	50	100	200
			Voltage Code				7	9	8	4	3	5	1	2	7	9	8	4	3	5	1	2
			Case Size/Series				1812								2220							

Table 2 – Chip Capacitor Land Pattern Design Recommendations per IPC–7351

EIA Size Code	Metric Size Code	Density Level A: Maximum (Most) Land Protrusion (mm)					Density Level B: Median (Nominal) Land Protrusion (mm)					Density Level C: Minimum (Least) Land Protrusion (mm)				
		C	Y	X	V1	V2	C	Y	X	V1	V2	C	Y	X	V1	V2
0402	1005	0.50	0.72	0.72	2.20	1.20	0.45	0.62	0.62	1.90	1.00	0.40	0.52	0.52	1.60	0.80
0603	1608	0.90	1.15	1.10	4.00	2.10	0.80	0.95	1.00	3.10	1.50	0.60	0.75	0.90	2.40	1.20
0805	2012	1.00	1.35	1.55	4.40	2.60	0.90	1.15	1.45	3.50	2.00	0.75	0.95	1.35	2.80	1.70
1206	3216	1.60	1.35	1.90	5.60	2.90	1.50	1.15	1.80	4.70	2.30	1.40	0.95	1.70	4.00	2.00
1210	3225	1.60	1.35	2.80	5.65	3.80	1.50	1.15	2.70	4.70	3.20	1.40	0.95	2.60	4.00	2.90
1812	4532	2.15	1.60	3.60	6.90	4.60	2.05	1.40	3.50	6.00	4.00	1.95	1.20	3.40	5.30	3.70
2220	5650	2.75	1.70	5.50	8.20	6.50	2.65	1.50	5.40	7.30	5.90	2.55	1.30	5.30	6.60	5.60

Density Level A: *For low-density product applications. It is recommended for wave solder applications and provides a wider process window for reflow solder processes. KEMET only recommends wave soldering of EIA 0603, 0805 and 1206 case sizes.*
Density Level B: *For products with a moderate level of component density. It provides a robust solder attachment condition for reflow solder processes.*
Density Level C: *For high component density product applications. Before adapting the minimum land pattern variations, the user should perform qualification testing based on the conditions outlined in IPC Standard 7351 (IPC-7351).*

Image below based on Density Level B for an EIA 1210 case size.

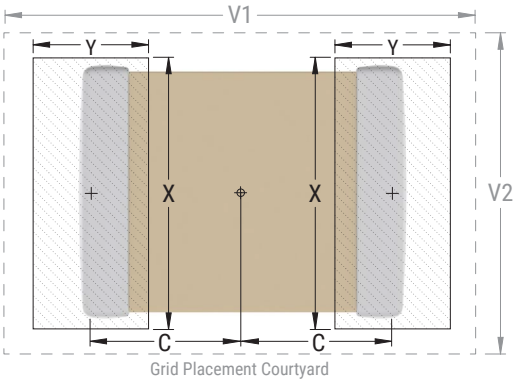

Soldering Process

Recommended Soldering Technique:

- Solder wave or solder reflow for EIA case sizes 0603, 0805 and 1206
- All other EIA case sizes are limited to solder reflow only

Recommended Reflow Soldering Profile:

KEMET's families of Surface Mount Multilayer Ceramic Capacitors (SMD MLCCs) are compatible with wave (single or dual), convection, IR, or vapor phase reflow techniques. Preheating of these components is recommended to avoid extreme thermal stress. KEMET's recommended profile conditions for convection and IR reflow reflect the profile conditions of the IPC/J–STD–020 standard for moisture sensitivity testing. These devices can safely withstand a maximum of three reflow passes at these conditions.

Profile Feature	Termination Finish
	SnPb
Preheat/Soak Temperature minimum (T_{Smin}) Temperature maximum (T_{Smax}) Time (t_s) from T_{Smin} to T_{Smax}	 100°C 150°C 60 – 120 seconds
Ramp-up rate (T_L to T_P)	3°C/second maximum
Liquidous temperature (T_L)	183°C
Time above liquidous (t_L)	60 – 150 seconds
Peak temperature (T_P)	235°C
Time within 5°C of maximum peak temperature (t_P)	20 seconds maximum
Ramp-down rate (T_P to T_L)	6°C/second maximum
Time 25°C to peak temperature	6 minutes maximum

Note: All temperatures refer to the center of the package, measured on the capacitor body surface that is facing up during assembly reflow.

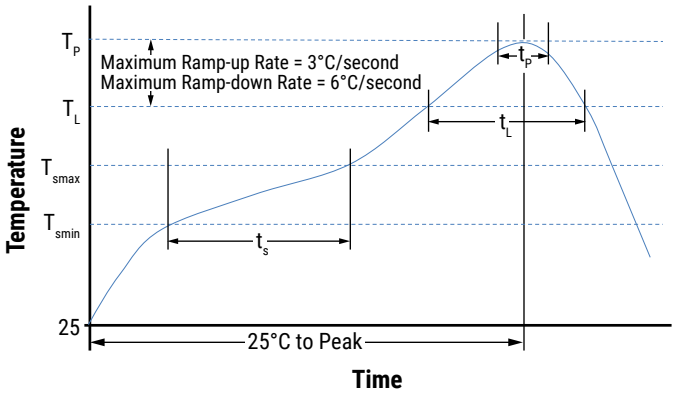

Storage and Handling

Ceramic chip capacitors should be stored in normal working environments. While the chips themselves are quite robust in other environments, solderability will be degraded by exposure to high temperatures, high humidity, corrosive atmospheres, and long term storage. In addition, packaging materials will be degraded by high temperature – reels may soften or warp and tape peel force may increase. KEMET recommends that maximum storage temperature not exceed 40°C and maximum storage humidity not exceed 70% relative humidity. In addition, temperature fluctuations should be minimized to avoid condensation on the parts. The atmospheres should be free of chlorine and sulfur bearing compounds. For optimized solderability chip stock should be used promptly, preferably within 1.5 years upon receipt.

Construction

Standard Termination

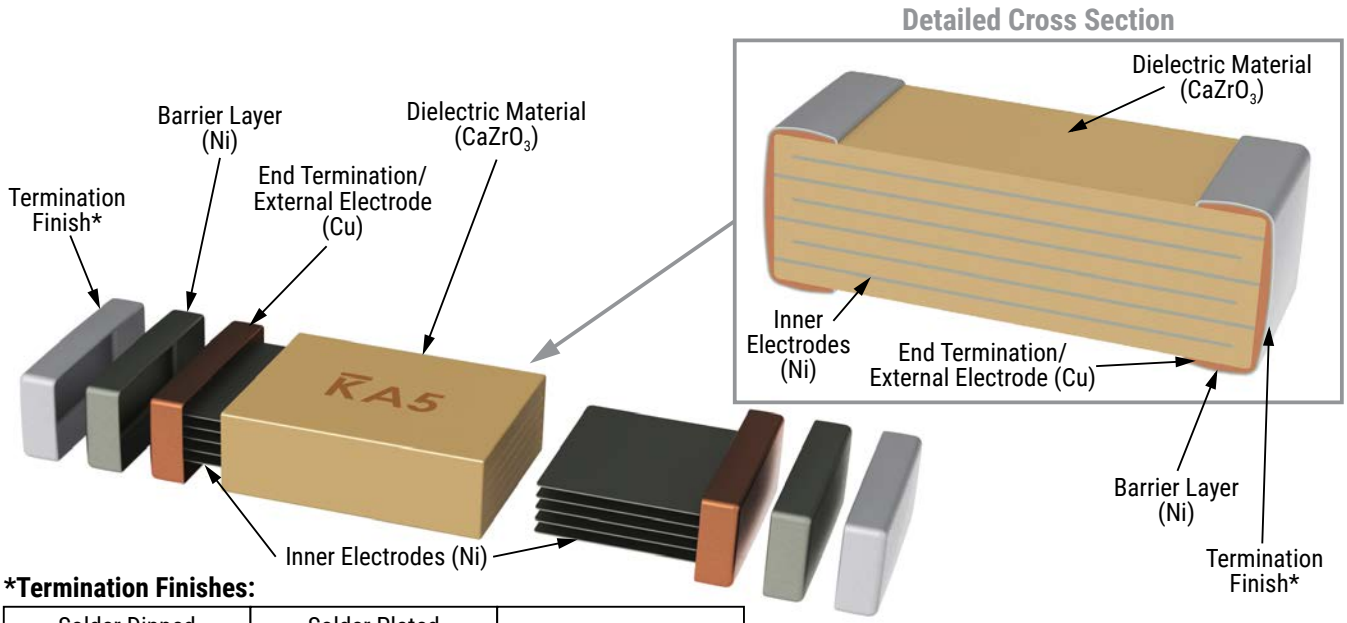

***Termination Finishes:**

Solder Dipped SnPb - 3% Pb Minimum	Solder Plated SnPb - 3% Pb Minimum	Gold (Au)

Flexible Termination

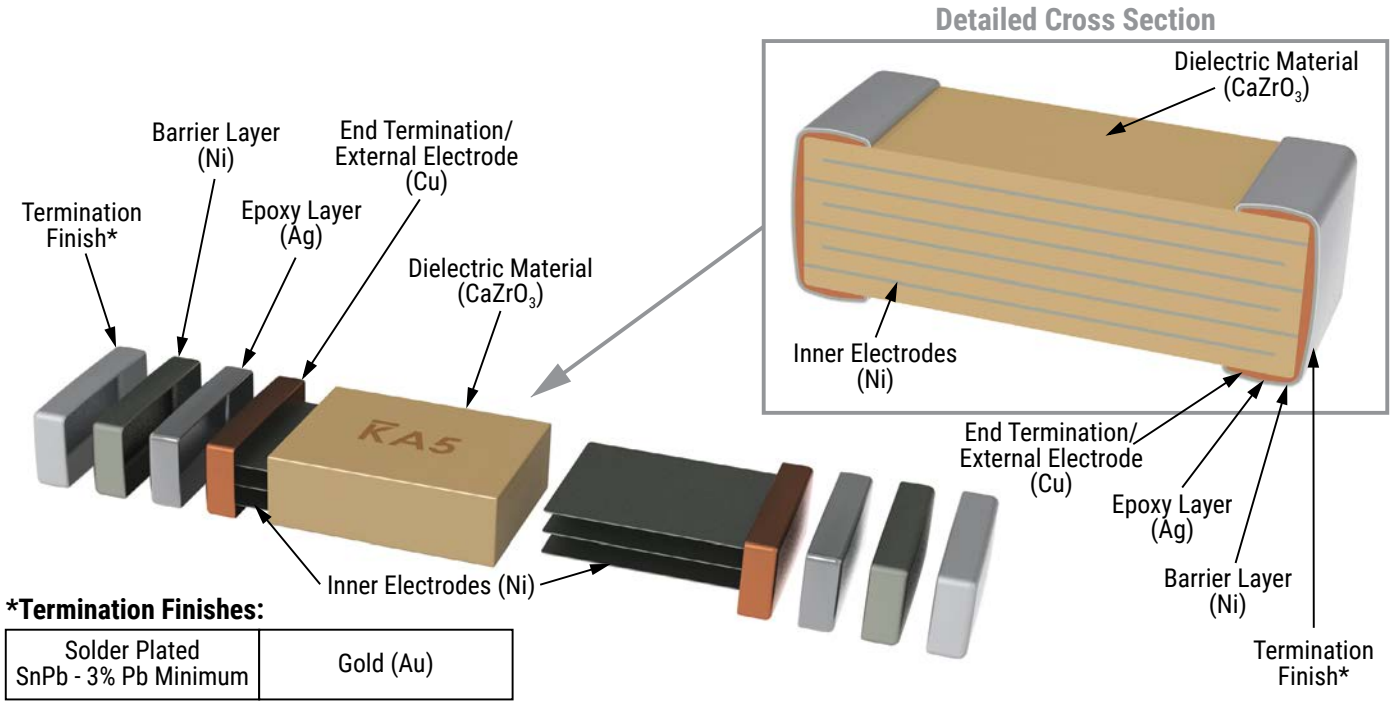

***Termination Finishes:**

Solder Plated SnPb - 3% Pb Minimum	Gold (Au)

Capacitor Marking:

KEMET MIL-PRF-32535 ceramic capacitors will be marked in accordance with the military specification on case sizes ≥ 0805. Case sizes below 0805 will not be marked. Two sides of the ceramic body will be laser marked with a "K̄" to identify KEMET, followed by two characters to identify the capacitance value.

The marking appears in legible contrast. Illustrated below is an example of an MLCC with laser the marking of "K̄A5", which designates a KEMET device with the rated capacitance of 100 nF.

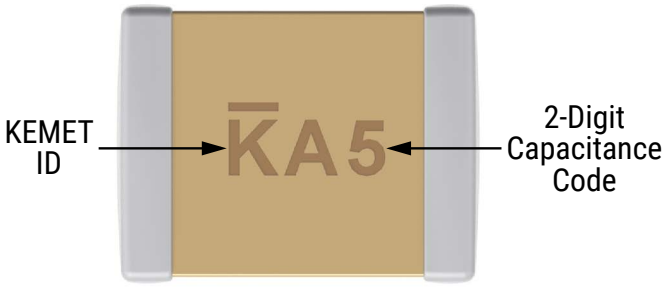

Capacitance (pF) For Various Alpha/Numeral Identifiers										
Alpha Character	Numeral									
	9	0	1	2	3	4	5	6	7	8
	Capacitance (pF)									
A	0.1	1.0	10	100	1,000	10,000	100,000	1,000,000	10,000,000	100,000,000
B	0.11	1.1	11	110	1,100	11,000	110,000	1,100,000	11,000,000	110,000,000
C	0.12	1.2	12	120	1,200	12,000	120,000	1,200,000	12,000,000	120,000,000
D	0.13	1.3	13	130	1,300	13,000	130,000	1,300,000	13,000,000	130,000,000
E	0.15	1.5	15	150	1,500	15,000	150,000	1,500,000	15,000,000	150,000,000
F	0.16	1.6	16	160	1,600	16,000	160,000	1,600,000	16,000,000	160,000,000
G	0.18	1.8	18	180	1,800	18,000	180,000	1,800,000	18,000,000	180,000,000
H	0.2	2.0	20	200	2,000	20,000	200,000	2,000,000	20,000,000	200,000,000
J	0.22	2.2	22	220	2,200	22,000	220,000	2,200,000	22,000,000	220,000,000
K	0.24	2.4	24	240	2,400	24,000	240,000	2,400,000	24,000,000	240,000,000
L	0.27	2.7	27	270	2,700	27,000	270,000	2,700,000	27,000,000	270,000,000
M	0.3	3.0	30	300	3,000	30,000	300,000	3,000,000	30,000,000	300,000,000
N	0.33	3.3	33	330	3,300	33,000	330,000	3,300,000	33,000,000	330,000,000
P	0.36	3.6	36	360	3,600	36,000	360,000	3,600,000	36,000,000	360,000,000
Q	0.39	3.9	39	390	3,900	39,000	390,000	3,900,000	39,000,000	390,000,000
R	0.43	4.3	43	430	4,300	43,000	430,000	4,300,000	43,000,000	430,000,000
S	0.47	4.7	47	470	4,700	47,000	470,000	4,700,000	47,000,000	470,000,000
T	0.51	5.1	51	510	5,100	51,000	510,000	5,100,000	51,000,000	510,000,000
U	0.56	5.6	56	560	5,600	56,000	560,000	5,600,000	56,000,000	560,000,000
V	0.62	6.2	62	620	6,200	62,000	620,000	6,200,000	62,000,000	620,000,000
W	0.68	6.8	68	680	6,800	68,000	680,000	6,800,000	68,000,000	680,000,000
X	0.75	7.5	75	750	7,500	75,000	750,000	7,500,000	75,000,000	750,000,000
Y	0.82	8.2	82	820	8,200	82,000	820,000	8,200,000	82,000,000	820,000,000
Z	0.91	9.1	91	910	9,100	91,000	910,000	9,100,000	91,000,000	910,000,000
a	0.25	2.5	25	250	2,500	25,000	250,000	2,500,000	25,000,000	250,000,000
b	0.35	3.5	35	350	3,500	35,000	350,000	3,500,000	35,000,000	350,000,000
d	0.4	4.0	40	400	4,000	40,000	400,000	4,000,000	40,000,000	400,000,000
e	0.45	4.5	45	450	4,500	45,000	450,000	4,500,000	45,000,000	450,000,000
f	0.5	5.0	50	500	5,000	50,000	500,000	5,000,000	50,000,000	500,000,000
m	0.6	6.0	60	600	6,000	60,000	600,000	6,000,000	60,000,000	600,000,000
n	0.7	7.0	70	700	7,000	70,000	700,000	7,000,000	70,000,000	700,000,000
t	0.8	8.0	80	800	8,000	80,000	800,000	8,000,000	80,000,000	800,000,000
y	0.9	9.0	90	900	9,000	90,000	900,000	9,000,000	90,000,000	900,000,000

Tape & Reel Packaging Information

KEMET offers multilayer ceramic chip capacitors packaged in 8 and 12 mm tape on 7" reels in accordance with EIA Standard 481. This packaging system is compatible with all tape-fed automatic pick and place systems.

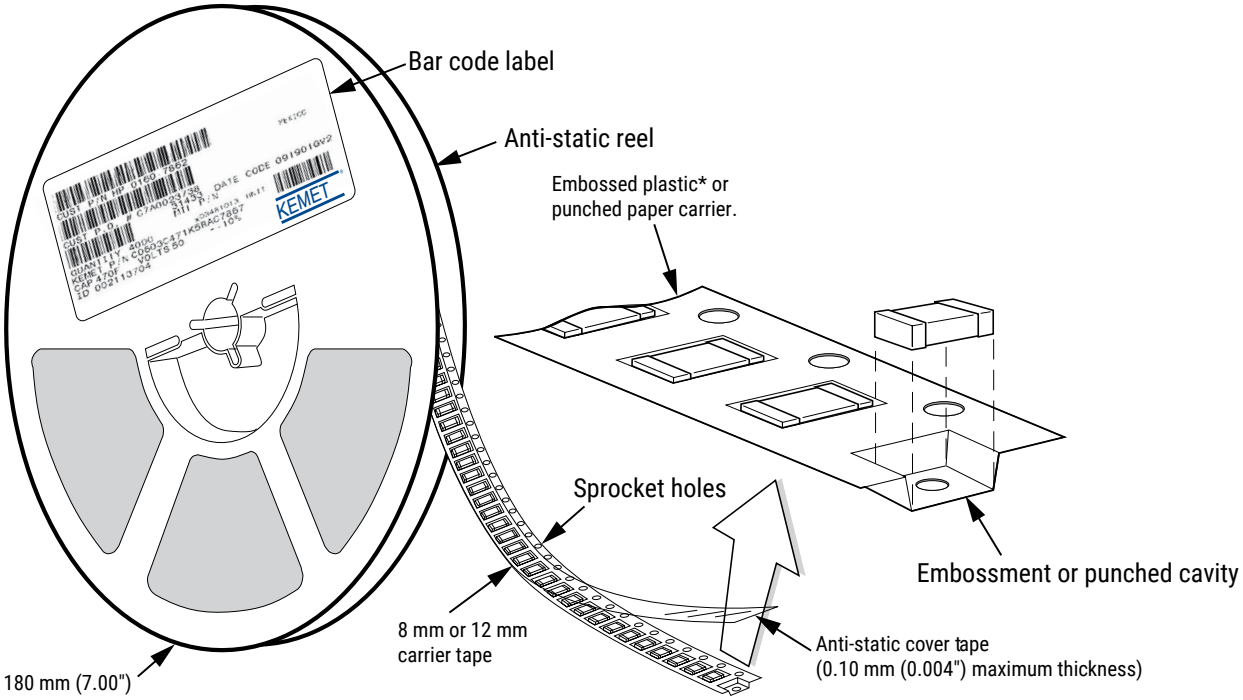

*EIA 0402 and 0603 case sizes available on punched paper carrier only.

Table 3 – Carrier Tape Configuration, Embossed Plastic & Punched Paper (mm)

EIA Case Size	Tape size (W)*	Embossed Plastic	Punched Paper
		7" Reel	7" Reel
		Pitch (P1)*	Pitch (P1)*
0402	8		2
0603	8		4
0805	8	4	4
1206 – 1210	8	4	4
≥ 1812	12	8	

**Refer to Figures 1 and 2 for W and P_1 carrier tape reference locations.*
**Refer to Tables 6 and 7 for tolerance specifications.*

Figure 1 – Embossed (Plastic) Carrier Tape Dimensions

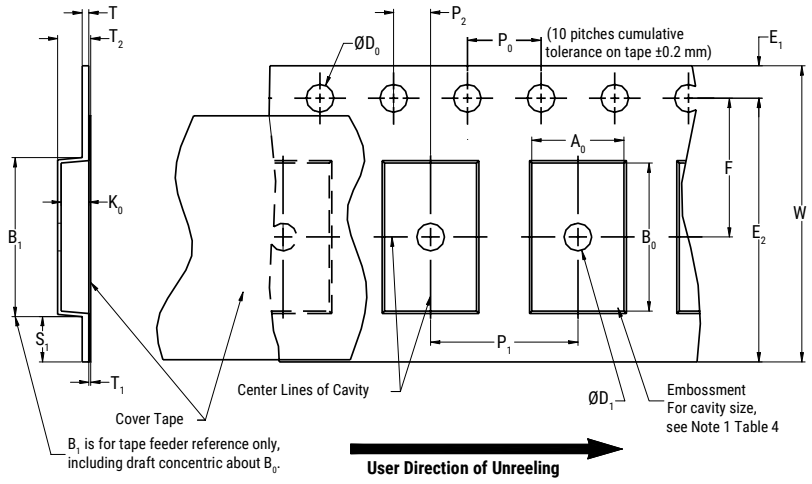

Table 4 – Embossed (Plastic) Carrier Tape Dimensions

Metric will govern

Constant Dimensions — Millimeters (Inches)									
Tape Size	D_0	D_1 Minimum Note 1	E_1	P_0	P_2	R Reference Note 2	S_1 Minimum Note 3	T Maximum	T_1 Maximum
8 mm	1.5 +0.10/−0.0 (0.059 +0.004/−0.0)	1.0 (0.039)	1.75±0.10 (0.069±0.004)	4.0±0.10 (0.157±0.004)	2.0±0.05 (0.079±0.002)	25.0 (0.984)	0.600 (0.024)	0.600 (0.024)	0.100 (0.004)
12 mm		1.5 (0.059)				30 (1.181)			

Variable Dimensions — Millimeters (Inches)								
Tape Size	Pitch	B_1 Maximum Note 4	E_2 Minimum	F	P_1	T_2 Maximum	W Maximum	A_0,B_0 and K_0
8 mm	Single (4 mm)	4.35 (0.171)	6.25 (0.246)	3.5±0.05 (0.138±0.002)	4.0±0.10 (0.157±0.004)	2.5 (0.098)	8.3 (0.327)	Note 5
12 mm	Single (4 mm) and Double (8 mm)	8.2 (0.323)	10.25 (0.404)	5.5±0.05 (0.217±0.002)	8.0±0.10 (0.315±0.004)	4.6 (0.181)	12.3 (0.484)	

1. The embossment hole location shall be measured from the sprocket hole controlling the location of the embossment. Dimensions of the embossment location and the hole location shall be applied independent of each other.
2. The tape with or without components, shall pass around R without damage (see Figure 6).
3. If S1 < 1.0 mm, there may not be enough area for cover tape to be properly applied (see EIA Document 481 paragraph 4.3 (b)).
4. B1 dimension is a reference dimension for a tape feeder clearance only.
5. The cavity defined by A_0, B_0 and K_0 shall surround the component with sufficient clearance that:
(a) The component does not protrude above the top surface of the carrier tape.
(b) The component can be removed from the cavity in a vertical direction without mechanical restriction, after the top cover tape has been removed.
(c) Rotation of the component is limited to 20° maximum for 8 and 12 mm tapes; 10° maximum for 16 mm tapes (see Figure 3).
(d) Lateral movement of the component is restricted to 0.5 mm maximum for 8 mm and 12 mm wide tape; to 1.0 mm maximum for 16 mm tape (see Figure 4).
(e) See addendum in EIA Document 481 for standards relating to more precise taping requirements.

Figure 2 – Punched (Paper) Carrier Tape Dimensions

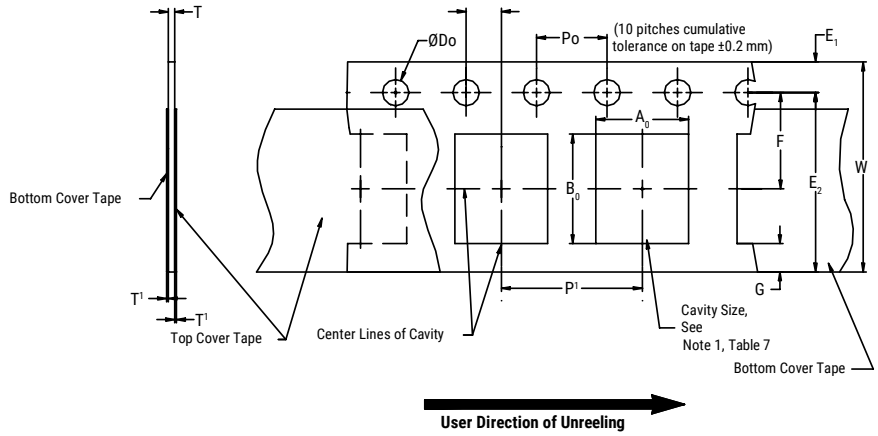

Table 5 – Punched (Paper) Carrier Tape Dimensions

Metric will govern

Constant Dimensions — Millimeters (Inches)							
Tape Size	D_0	E_1	P_0	P_2	T_1 Maximum	G Minimum	R Reference Note 2
8 mm	1.5 + 0.10/−0.0 (0.059 + 0.004/−0.0)	1.75±0.10 (0.069±0.004)	4.0±0.10 (0.157±0.004)	2.0±0.05 (0.079±0.002)	0.100 (0.004)	0.75 (0.030)	25.0 (0.984)

Variable Dimensions — Millimeters (Inches)							
Tape Size	Pitch	E_2 Minimum	F	P1	T Maximum	W Maximum	A_0 and B_0
8 mm	Half (2 mm)	6.25 (0.246)	3.5 ±0.05 (0.138 ±0.002)	2.0±0.05 (0.079±0.002)	1.1 (0.098)	8.3 (0.327)	Note 1
8 mm	Single (4 mm)			4.0±0.10 (0.157±0.004)		8.3 (0.327)	

1. The cavity defined by A_0, B_0 and T shall surround the component with sufficient clearance that:
a) the component does not protrude beyond either surface of the carrier tape.
b) the component can be removed from the cavity in a vertical direction without mechanical restriction, after the top cover tape has been removed.
c) rotation of the component is limited to 20° maximum (see Figure 3).
d) lateral movement of the component is restricted to 0.5 mm maximum (see Figure 4).
e) see Addendum in EIA Standard 481 for standards relating to more precise taping requirements.
2. The tape with or without components shall pass around R without damage (see Figure 6).

Packaging Information Performance Notes

1. Cover Tape Break Force: 1.0 kg minimum.
2. Cover Tape Peel Strength: The total peel strength of the cover tape from the carrier tape shall be:

Tape Width	Peel Strength
8 mm	0.1 to 1.0 Newton (10 to 100 gf)
12 and 16 mm	0.1 to 1.3 Newton (10 to 130 gf)

The direction of the pull shall be opposite the direction of the carrier tape travel. The pull angle of the carrier tape shall be 165° to 180° from the plane of the carrier tape. During peeling, the carrier and/or cover tape shall be pulled at a velocity of 300 ±10 mm/minute.
3. Labeling: Bar code labeling (standard or custom) shall be on the side of the reel opposite the sprocket holes. *Refer to EIA Standards 556 and 624*.

Figure 3 – Maximum Component Rotation

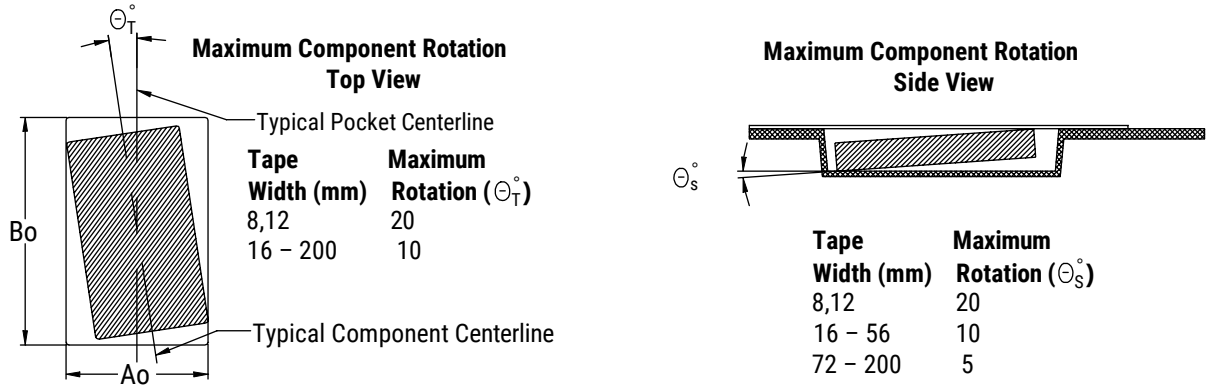

Figure 4 – Maximum Lateral Movement

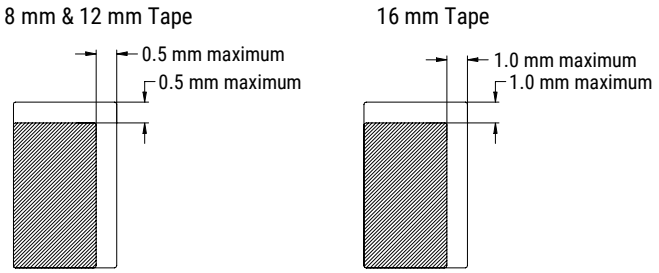

Figure 5 – Bending Radius

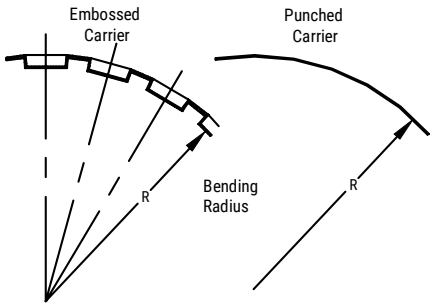

Figure 6 – Reel Dimensions

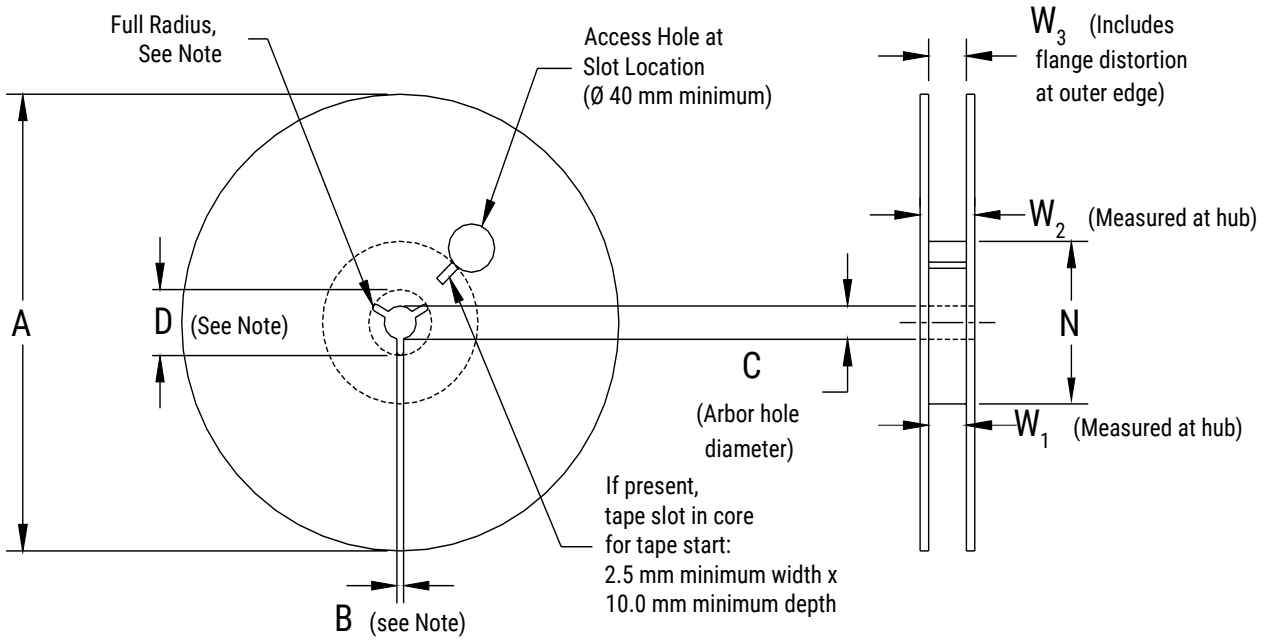

Note: Drive spokes optional; if used, dimensions B and D shall apply.

Table 6 – Reel Dimensions

Metric will govern

Constant Dimensions — Millimeters (Inches)				
Tape Size	A	B Minimum	C	D Minimum
8 mm	178±0.20 (7.008±0.008) or 330±0.20 (13.000±0.008)	1.5 (0.059)	13.0 + 0.5/−0.2 (0.521 + 0.02/−0.008)	20.2 (0.795)
12 mm				

Variable Dimensions — Millimeters (Inches)				
Tape Size	N Minimum See Note 2, Tables 2–3	W_1	W_2 Maximum	W_3
8 mm	50 (1.969)	8.4 + 1.5/−0.0 (0.331 + 0.059/−0.0)	14.4 (0.567)	Shall accomadate tape width without interference
12 mm		12.4 + 2.0/−0.0 (0.488 + 0.078/−0.0)	18.4 (0.724)	

Figure 7 – Tape Leader & Trailer Dimensions

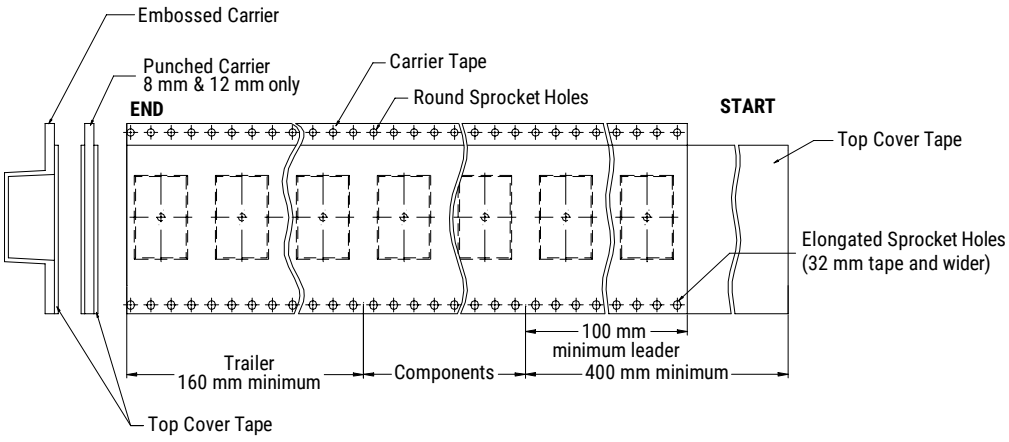

Figure 8 – Maximum Camber

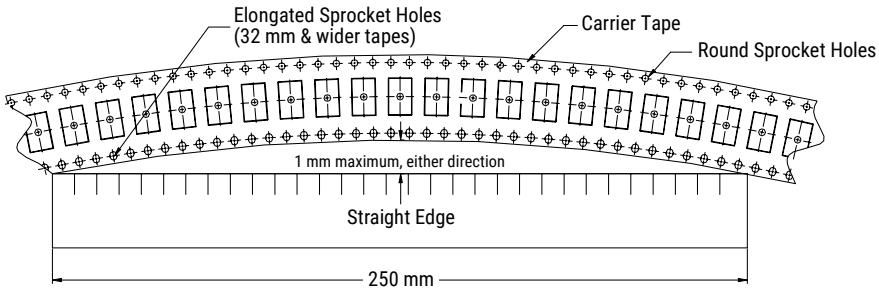

Waffle Tray Packaging Information – 2" x 2" w/ Static Protection

Figure 9 – Waffle Tray Dimensions – Inches (Millimeters)

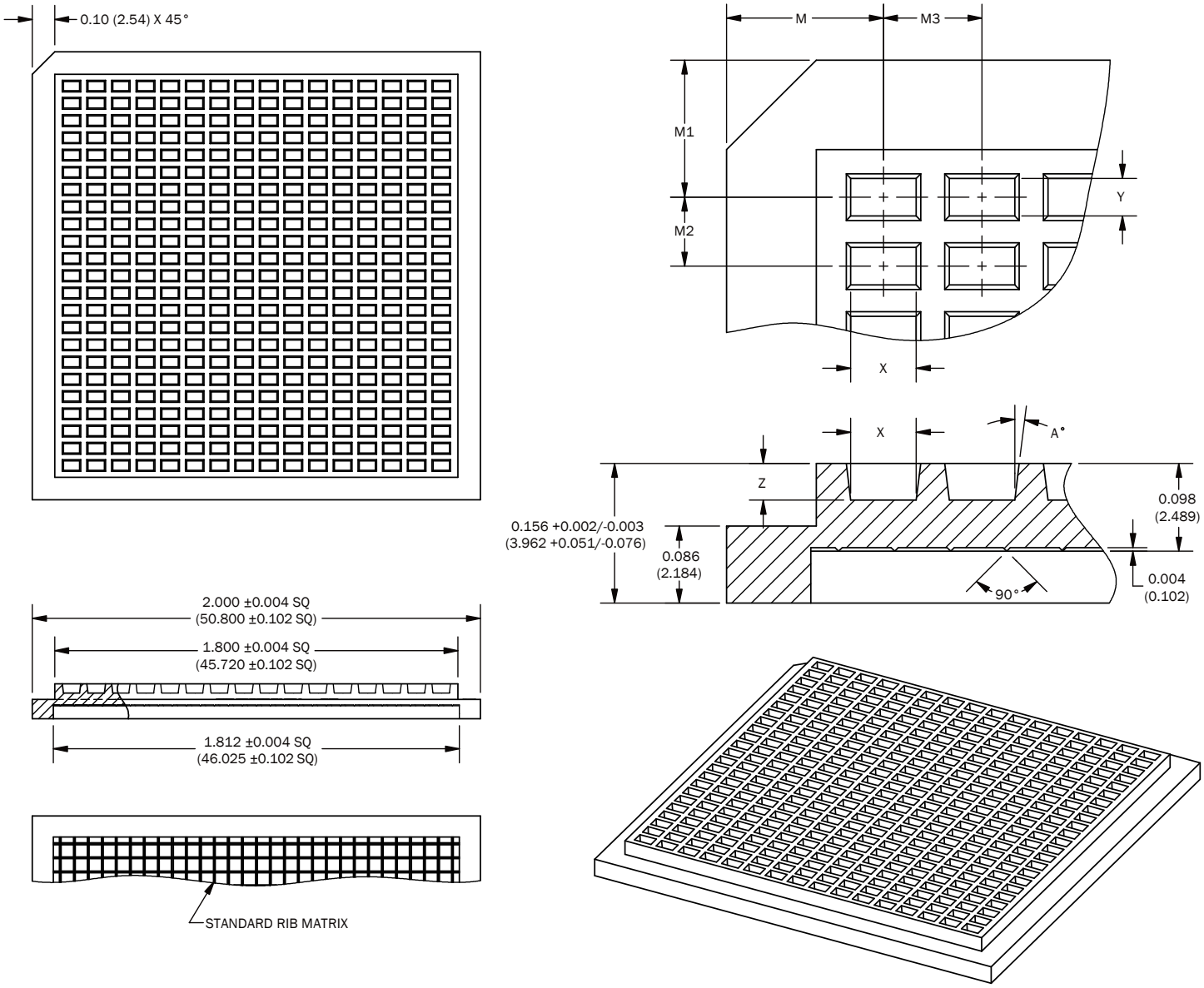

Table 7A – Waffle Tray Dimensions – Inches

Case Size		2" x 2" Waffle Tray Dimensions – Inches									Packaging Quantity (pcs/unit packaging)
		M	M1	M2	M3	X	Y	Z	A°	MATRIX	
EIA (in)	Metric (mm)	±0.003	±0.003	±0.002	±0.002	±0.002	±0.002	±0.003	±1/2°	(X x Y)	
0402	1005	0.175	0.153	0.077	0.110	0.073	0.042	0.041	7	16 X 23	368
0603	1608	0.175	0.153	0.077	0.110	0.073	0.042	0.041	7	16 X 23	368
0805	2012	0.232	0.186	0.181	0.171	0.062	0.092	0.036	10	10 X 10	100
1206[1,2]	3216	0.194	0.228	0.193	0.124	0.067	0.130	0.065	5	14 X 9	126
1206[1,3]	3216	0.250	0.250	0.375	0.167	0.100	0.200	0.070	5	10 X 5	50
1210	3225	0.217	0.244	0.215	0.174	0.110	0.145	0.080	5	10 X 8	80
1812	4532	0.271	0.285	0.286	0.243	0.150	0.200	0.075	5	7 X 6	42
2220	5650	0.318	0.362	0.424	0.34	0.24	0.32	0.032	5	5 X 4	20

[1] Packaging of 1206 (3216 metric) case size capacitors is dependent upon the nominal chip thickness of the device. Contact KEMET Sales for Waffle Tray quantities for specified part number.
[2] Assigned to 1206 (3216 metric) case size capacitors with nominal thickness of ≤ 1.25 mm (0.049 inches).
[3] Assigned to 1206 (3216 metric) case size capacitors with nominal thickness of > 1.25 mm (0.049 inches).

Table 7B – Waffle Tray Dimensions – Millimeters

Case Size		2" x 2" Waffle Tray Dimensions – Millimeters									Packaging Quantity (pcs/unit packaging)
		M	M1	M2	M3	X	Y	Z	A°	MATRIX	
EIA (in)	Metric (mm)	±0.08	±0.08	±0.05	±0.05	±0.05	±0.05	±0.08	±1/2°	(X x Y)	
0402	1005	4.45	3.89	1.96	2.79	1.85	1.07	1.04	7	16 X 23	368
0603	1608	4.45	3.89	1.96	2.79	1.85	1.07	1.04	7	16 X 23	368
0805	2012	5.89	4.72	4.60	4.34	1.57	2.34	0.91	10	10 X 10	100
1206[1,2]	3216	4.93	5.79	4.90	3.15	1.70	3.30	1.65	5	14 X 9	126
1206[1,3]	3216	6.35	6.35	9.53	4.24	2.54	5.08	1.78	5	10 X 5	50
1210	3225	5.51	6.20	5.46	4.42	2.79	3.68	2.03	5	10 X 8	80
1812	4532	6.88	7.24	7.26	6.17	3.81	5.08	1.91	5	7 X 6	42
2220	5650	8.08	9.19	10.77	8.64	6.10	8.13	0.81	5	5 X 4	20

[1] Packaging of 1206 (3216 metric) case size capacitors is dependent upon the nominal chip thickness of the device. Contact KEMET Sales for Waffle Tray quantities for specified part number.
[2] Assigned to 1206 (3216 metric) case size capacitors with nominal thickness of ≤ 1.25 mm (0.049 inches).
[3] Assigned to 1206 (3216 metric) case size capacitors with nominal thickness of > 1.25 mm (0.049 inches).

KEMET Electronics Corporation Sales Offices

For a complete list of our global sales offices, please visit www.kemet.com/sales.

Disclaimer

YAGEO Corporation and its affiliates do not recommend the use of commercial or automotive grade products for high reliability applications or manned space flight.

All product specifications, statements, information and data (collectively, the "Information") in this datasheet are subject to change. The customer is responsible for checking and verifying the extent to which the Information contained in this publication is applicable to an order at the time the order is placed. All Information given herein is believed to be accurate and reliable, but it is presented without guarantee, warranty, or responsibility of any kind, expressed or implied.

Statements of suitability for certain applications are based on KEMET Electronics Corporation's ("KEMET") knowledge of typical operating conditions for such applications, but are not intended to constitute – and KEMET specifically disclaims – any warranty concerning suitability for a specific customer application or use. The Information is intended for use only by customers who have the requisite experience and capability to determine the correct products for their application. Any technical advice inferred from this Information or otherwise provided by KEMET with reference to the use of KEMET's products is given gratis, and KEMET assumes no obligation or liability for the advice given or results obtained.

Although KEMET designs and manufactures its products to the most stringent quality and safety standards, given the current state of the art, isolated component failures may still occur. Accordingly, customer applications which require a high degree of reliability or safety should employ suitable designs or other safeguards (such as installation of protective circuitry or redundancies) in order to ensure that the failure of an electrical component does not result in a risk of personal injury or property damage.

Although all product–related warnings, cautions and notes must be observed, the customer should not assume that all safety measures are indicated or that other measures may not be required.

KEMET is a registered trademark of KEMET Electronics Corporation.

Mouser Electronics

Authorized Distributor

Click to View Pricing, Inventory, Delivery & Lifecycle Information:

KEMET:

M3253502E1Z102JZMB M3253502BPB101FZTB-T&R M3253502E1B101JZMB-T&R M3253502E1Z102JZMB-T&R M3253503E1B101JZMB-T&R M3253503E1B102JZMB-T&R M3253504E1Z103JZMB-T&R M3253505E1B103JZMB-T&R M3253507E1Z104JZMB-T&R M3253508E1B104JZMB-T&R M3253502BPB101FZMB-T&R M3253502E1A101FZTB M3253504BPC101KDTB M3253502BPZ102JZTB M3253502BPB330FZTB M3253502BPB560FZTB M3253502E1B220JZMB M3253503E1B1R0BZMB M3253503E1B101JRMB M3253503E1Z220FZTB M3253503E1B221JRMB M3253503E1B471JRMB M3253502BPZ101JZMB M3253503E1B471JRMB050