RoHS Compliance

REV.	SIGN	DATE	DESCRIPTION	APPROVER
B	1	09/15`11	The color is changed from RAL7035/D to RAL7004/P	Runner
B	2	09/15`11	The dimension is changed from 2.1 to 2.2	Runner
B	3	09/15`11	The Material is changed	Runner
B	4	09/15`11	The tolerance is changed	Runner
C	5	09/25`13	change the dimension from 18.6&2.6 to 19.2&3.2	Da cheng
C	6	09/25`13	change the electrical specification	Da cheng
D	7	12/28'13	update the drawing	Da cheng
E	7	11/21`22	Add Safety Approval TUV	Johnson

THIS IS CAD DRAWING, DO NOT REVISE MANUALLY!!!

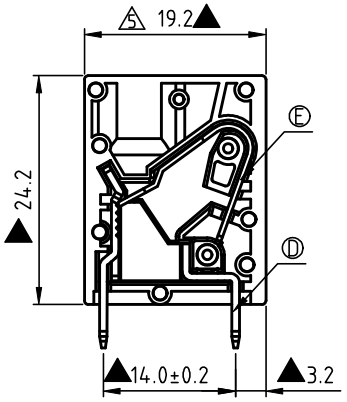

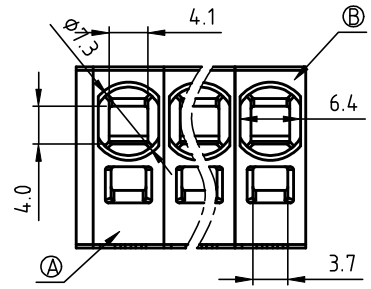

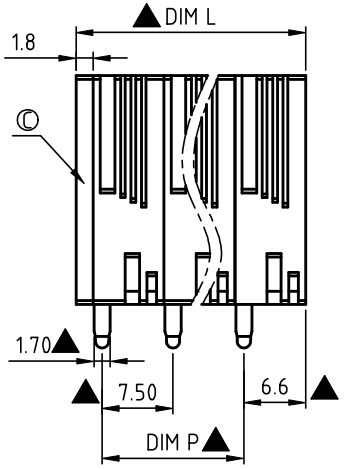

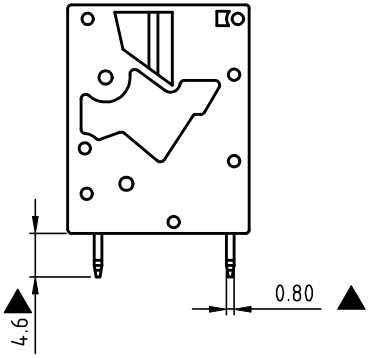

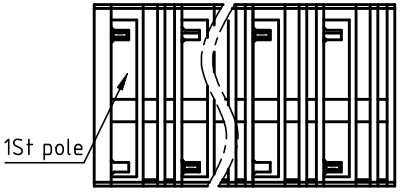

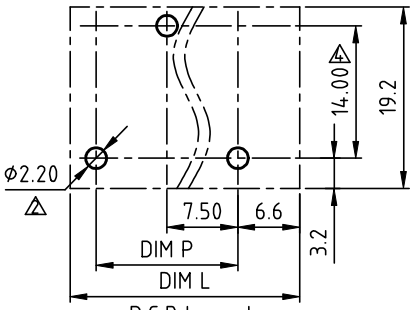

P.C.B Layout
Top view

Material:

- Item Ⓐ Terminal body: Thermoplastic (UL94V-0)
- Item Ⓑ Terminal side body: Thermoplastic (UL94V-0)
- Item Ⓒ Terminal cover: Thermoplastic (UL94V-0)
- 3 Item Ⓓ Contact pin : Copper, Tin Plated.
- Item Ⓔ Spring clamp : Stainless steel

8 6 Electrical:

	cULus	TUV(EN/IEC60998-2-2)
Voltage rating:	300 V	1000 V
Current rating(Sol):	30 A	41 A
Current rating(Str):	35 A	41 A
Solid wire(AWG):	10-24	$0.2mm^2$-$10mm^2$ (IEC)
Stranded wire(AWG):	8-24	$0.2mm^2$-$6mm^2$ (IEC)
Wire strip length:	15-16 mm	
Withstanding Voltage:	1.6KV	3.5KV
Operating temperature:	-40°C to +120°C	
Soldering temperature:	260°C±5°C/5 Sec	
Safety Approval:	cULus	
Critical dimension:	▲	

NK xx A 0 x 1 xxxx G

- xx: 7 End Stackable
  - 01: 1 POLES
  - 03: 3 POLES
  - :
  - 15: 15 POLES
- 0: 6 Body Color
  - 0 Black (RAL9005)
  - 2 Red (RAL3001/D)
  - 3 Orange(RAL2011/P)
  - 4 Yellow(RAL1018/A)
  - 5 Green(RAL6018/T)
  - 6 Blue (RAL5015/A)
  - 1 8 Grey(RAL7004/P)
  - 9 White(RAL1102)
  - C Multiple colors
- 1: 0000: "@" Logo (Standard)
  - 000A: "ANYTEK" Mark
  - Any special item by customer requst. please contact sales department.
- G: RoHS compliant (lead<4%) In copper Alloy

N=NUMBER OF POLES 4

DIM		TOL 1P--6P	TOL 7P--12P	TOL 13P--16P
Dim P	(N-1)×7.5	±0.15	±0.25	±0.35
Dim L	N×7.5+1.8	±0.15	±0.25	±0.35

Amphenol ANYTEK

CUSTOMER COPY

ALL RIGHTS RESERVED. REPRODUCTION OR ISSUE TO THIRD PARTIES IN ANY FORM WHATEVER IS NOT PERMITTED WITHOUT WRITTEN AUTHORITY FROM THE PROPRIETOR. PROPERTY OF ANYTEK TECHNOLOGY CO., LTD

TITLE	NK 7.5mm Series Vertical (Single tail B type)(第1P左缺脚子靠邊蓋) 單數P				
PART NO.	NKxxA0x1xxxxG			DWG NO.	8NK0002
APPROVED	CHECKED	DESIGNED	DRAWN	CUST NO.	
		Johnson 2022.11.21	Johnson 2022.11.21	UNIT: mm	
				SCALE: NONE	
				SHEET: 01/01	REV.: E

Tolerance	
X.	±0.50
X.X	±0.30
X.XX	±0.10
X°	±1°