SST-10-IRD-940nm

Dual Junction Surface Mount Series Low Thermal Resistance Infrared LED

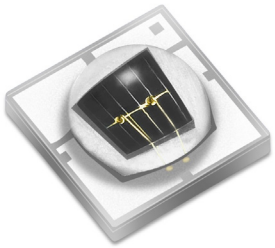

Features

- High Power Infrared LED with typical 940 nm centroid wavelength
- High thermal conductivity substrate
- 50, 90 and 130-degree viewing angle
- Operation at up to 1.5 A CW and 5 A pulse
- Corrosion Robustness Class: 3B
- Built-in ESD protection
- Low Thermal Resistance
- Suitable for all SMT Assembly Methods

Applications

- Surveillance Systems/CCTV
- Iris and Face Recognition
- License Plate Scanning
- Automotive Sensing
- Machine Vision
- Night Vision

Table of Contents

Ordering Information. 2
Binning Structure. 3
Absolute Maximum Ratings 4
Device Characteristics 5
Permissible Pulse Handling Capability. 7
Angular Distribution and Typical Spectrum. 8
Soldering Profile. 10
Mechanical Dimensions. 11
Tape and Reel Outline 14
Shipping Label 16
Notes 17
Revision History 18

Ordering Information

Ordering Part Numbers[1]

Color	Peak Wavelength	Luminous Flux		Lens Angle	Ordering Part Number
		Min. Flux Bin	Min. Flux		
IRD	940 nm	U	535 mW	50	SST-10-IRD-B50H-U940
		U	535 mW	90	SST-10-IRD-B90H-U940
		U	535 mW	130	SST-10-IRD-B130H-U940

Part Number Nomenclature

SST	10	IRD	B##H	<Bin kit>
Product Family	**Chip Area**	**Color**	**Package Configuration**	**Bin Kit**
SST - Ceramic Surface Mount package w/ encapsulation	10: 1.0 mm^2	IRD: Dual Junction Infrared	50/90/130: Viewing angle in degrees	Refer to ordering part numbers in this document

Note:

1. Flux Bin listed is minimum bin shipped, higher bins may be included at Luminus' discretion.

Binning Structure

All SST-10-IRD LEDs are tested for radiometric flux/peak wavelength and placed into one of the following flux/wavelength bins. The binning structure is universally applied to all IR wavelengths in the SST-10-IRD product line

Flux Bins[1,2]

Color	Radiometric Flux Bin[3]	Binning @ 0.35 A, T_c= 25°C[4]	
		Minimum Flux (mW)	Maximum Flux (mW)
IRD	U	535	565
	V	565	595
	W	595	625
	X	625	655
	Y	655	685
	Z	685	715

Peak Wavelength Bins[2]

Color	Wavelength Bin[3,5]	Binning @ 0.35 A, T_c= 25°C[4]	
		Minimum Wavelength (nm)	Maximum Wavelength (nm)
IRD	940	930	970

Forward Voltage Bins[2]

Color	Voltage Bin[3,5]	Binning @ 0.35 A, T_c= 25°C[4]	
		Minimum Voltage (V)	Maximum Voltage(V)
IRD	V8	2.6	2.8
	V9	2.8	3.0
	Va	3.0	3.2

Note:

1. Luminus maintains a +/- 6% tolerance on flux measurements.
2. Products are production tested then sorted and packed by bin.
3. Individual bins are not orderable. Please refer to the Product Ordering information page for a list of orderable bin kits.
4. T_c= Case temperature.
5. The wavelength bin as marked on the product label may be followed by a letter which is for internal use only.

Absolute Maximum Ratings

	Symbol	Values	Unit
Forward Current (CW)[1,2,3]	$I_{f\ CW}$	1.5	A
Forward Current (Pulse)[1,2,3]	$I_{f\ Pulse}$	5	
Reverse Voltage	V_R	5	V
Power Dissipation	P_D	6	W
Storage Temperature	$T_{s\ min}$	-40	°C
	$T_{s\ max}$	100	
Junction Temperature[3]	$T_{j\ max}$	115	°C
ESD sensitivity JEDEC JS-001-2014 (HBM, Class 3B)	V_{ESD}	8	kV
ESD sensitivity JEDEC JS-002-2018 (CDM, Class C3)	V_{CDM}	1	kV

Note:

1. To prevent damage refer to operating conditions and derating curves for appropriate maximum operating conditions.
2. Luminus SST-10-IRD-940nm LEDs are designed for operation up to an absolute maximum forward drive current as specified above. Product lifetime data is specified at typical forward drive currents. Sustained operation at absolute maximum currents will result in a reduction of device lifetime compared to typical forward drive currents. Actual device lifetimes will also depend on junction temperature. .
3. Maximum operating case temperature combined with maximum drive current defines the total maximum operating condition for the device. To prevent damage, please operate devices within specified conditions.

Device Characteristics[1]

Optical and Electrical Characteristics	Symbol	Value			Unit
		B50H	B90H	B130H	
Test Current	I_f	0.35			A
Typical Output Power(I=0.35 A, t=20 ms)	φ_v	600		640	mW
Typical Output Power (I=1.0 A, t=20 ms)	φ_v (1A)	1.66		1.77	W
Radiant Intensity(I=1.0 A, t=20 ms)	Φ_E	1,083	765	530	mW/sr
Forward Voltage	$V_{f\,min}$	2.6			V
	V_f	2.8			
	$V_{f\,max}$	3.2			
Centroid Wavelength	λ_c	940			nm
Peak Wavelength	λ_p	945			nm
FWHM- Spectral bandwidth at 50% of Φ_V	$\Delta\lambda_{1/2}$	30			nm
Thermal Characteristics					
Thermal Resistance (junction to case, electrical)	$R_{th(j-c)}$	2.4			°C/W
Thermal Coefficient of Wavelength		0.3			nm/°C
Thermal Coefficient of Radiometric Flux		-0.2			%/°C
Thermal Coefficient of Forward Voltage		-3.0			mV/°C

Note:

1. Binning based on operation at a current of 350 mA, 20 ms single pulse and a constant case temperature of T_c = 25°C. Parts are binned and shipped in 0.2 V Vf increments.

Relative Radiometric Flux

Forward current: $\varphi_v/\varphi_v(0.35\ A)$, $T_c = 25°C$

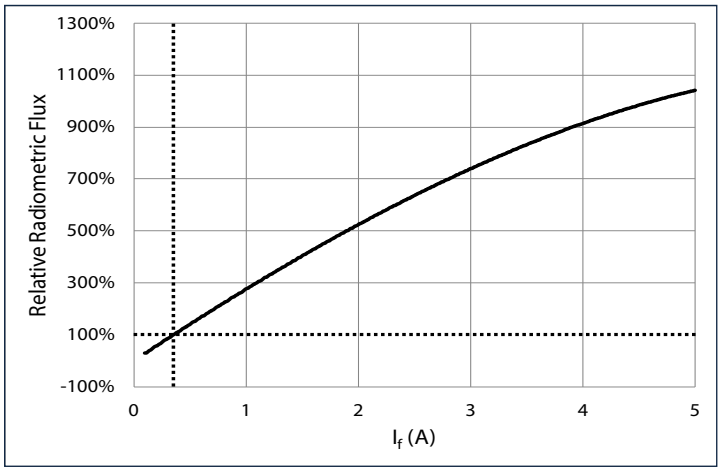

Temperature: $\varphi_v/\varphi_v(25°C)$, $I_f = 0.35\ A$

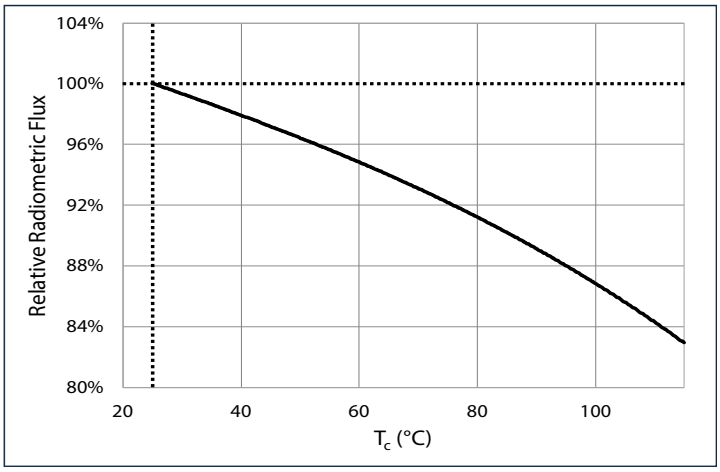

Forward Voltage

Forward current: $V_f = V(I_f)$, $T_c = 25°C$

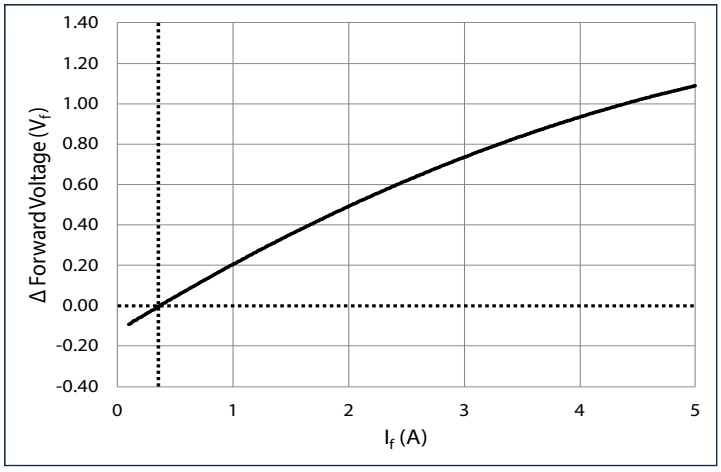

Temperature: $\Delta V_f = V(T_c) - V(25°C)$, $I_f = 0.35\ A$

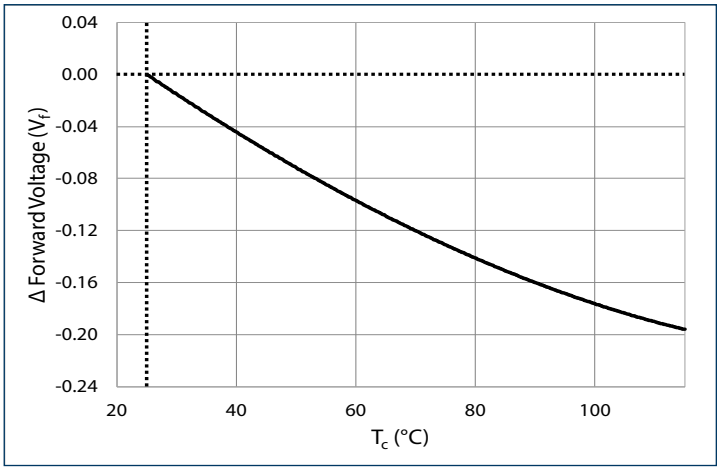

Peak Wavelength Shift

Forward current: $\Delta\lambda_p = \lambda_p(I_f) - \lambda_p(0.35\ A)$, $T_c = 25°C$

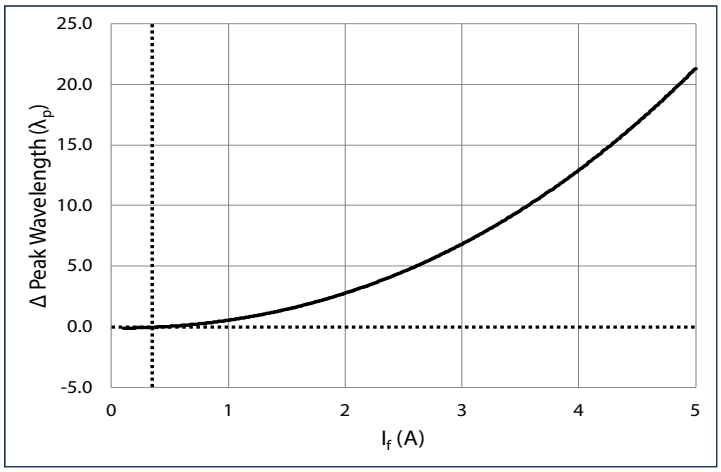

Temperature: $\Delta\lambda_p = \lambda_p(T_c) - \lambda_p(25°C)$, $I_f = 0.35\ A$

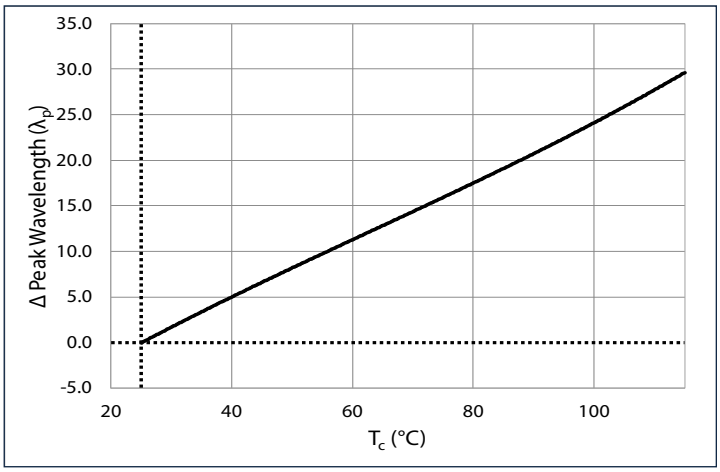

Permissible Pulse Handling Capability

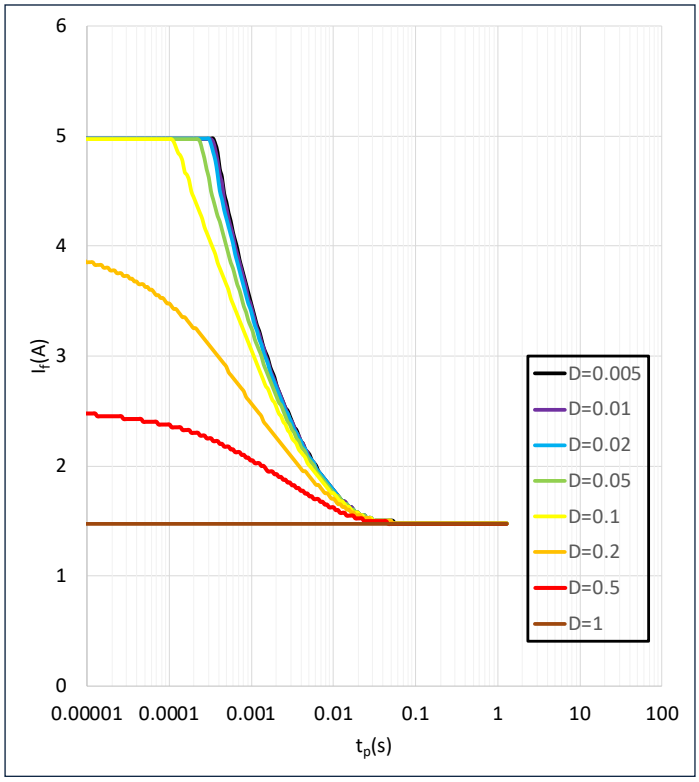

Angular Distribution and Typical Spectrum

Angular Intensity Distribution-B50H

$I_{ref} = f(\Phi)$; $T_c = 25°C$

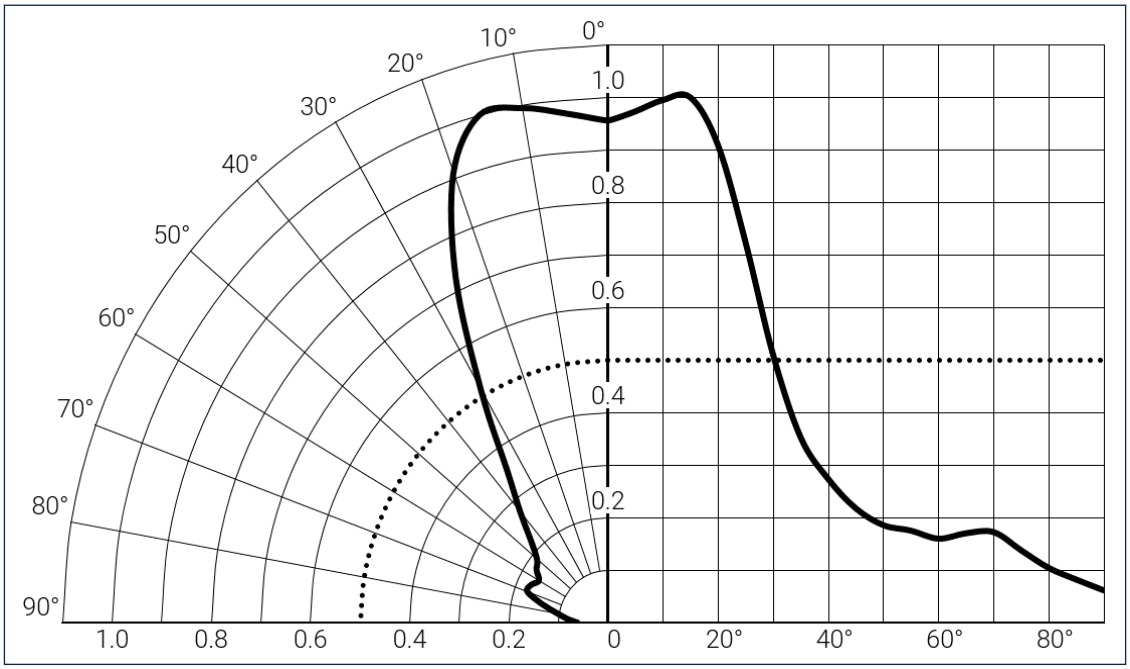

Angular Intensity Distribution-B90H

$I_{ref} = f(\Phi)$; $T_c = 25°C$

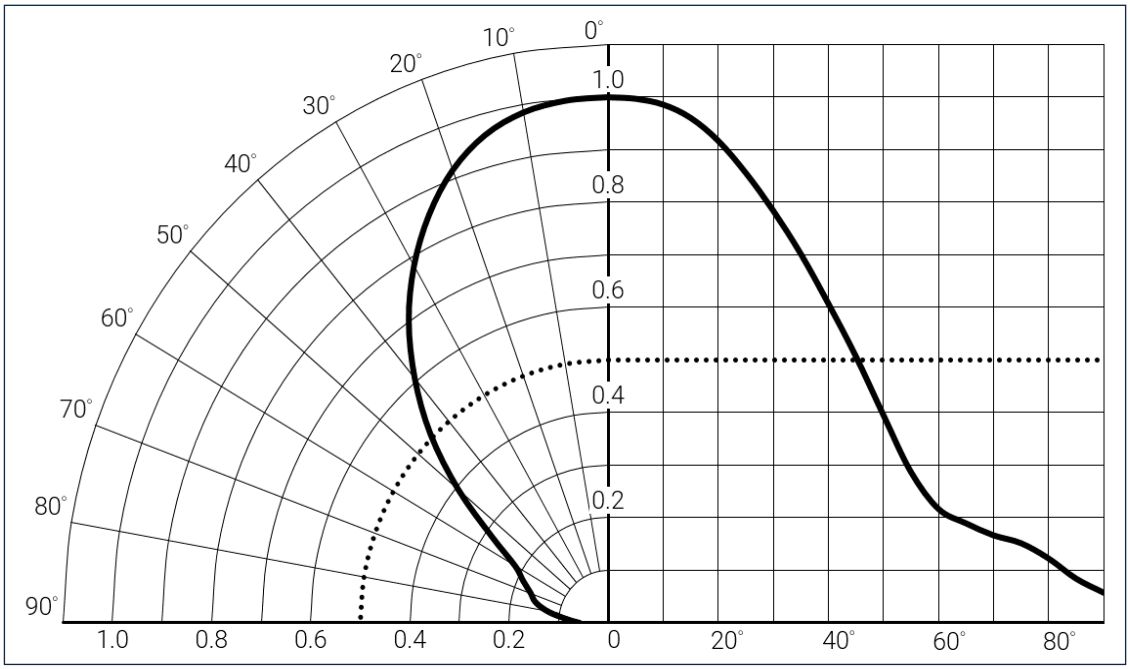

Angular Distribution and Typical Spectrum

Angular Intensity Distribution-B130H

$I_{ref} = f(\Phi)$; $T_c = 25°C$

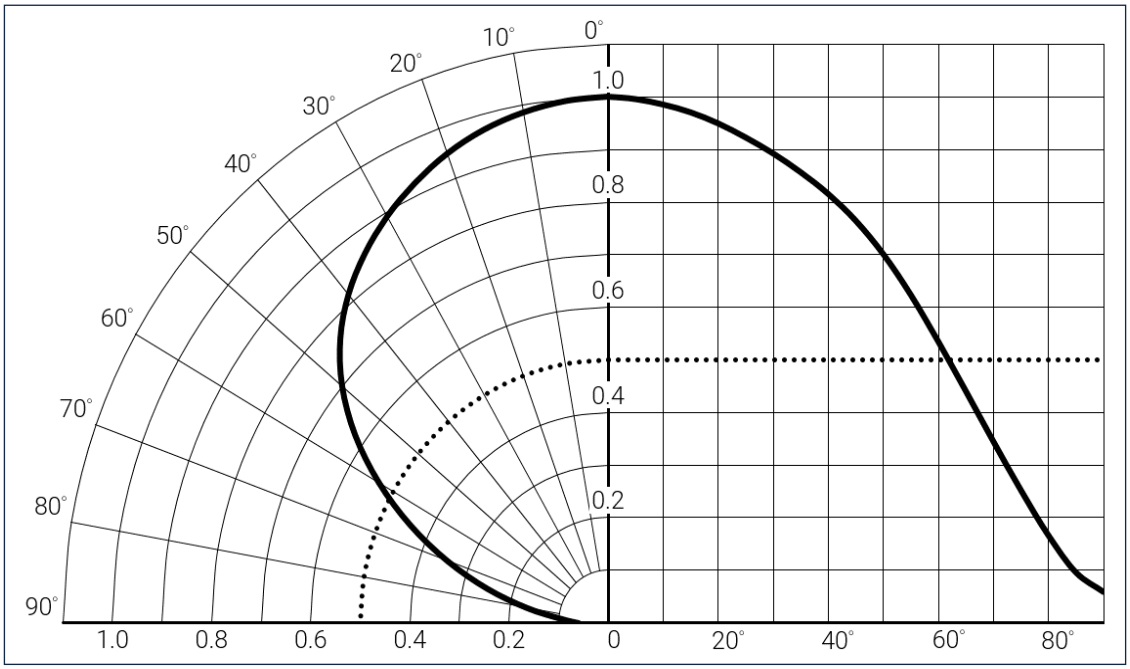

Typical Spectrum

$\Phi_{ref} = f(\lambda)$; $I_f = 0.35$ A; $T_c = 25°C$

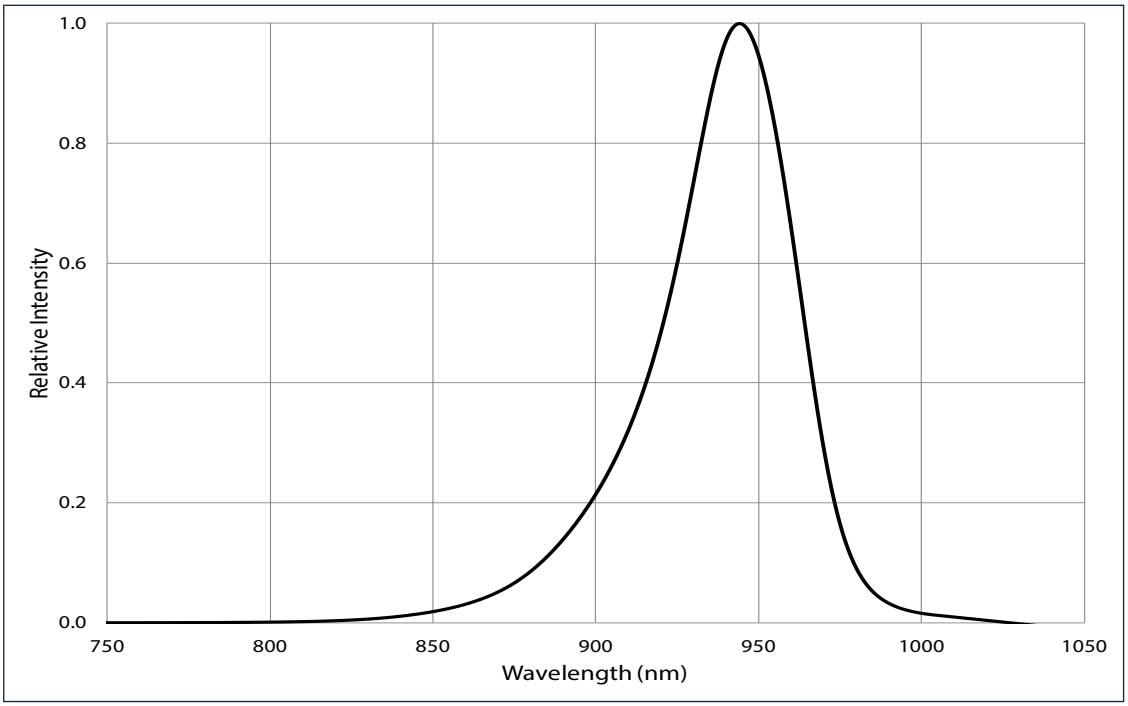

Soldering Profile

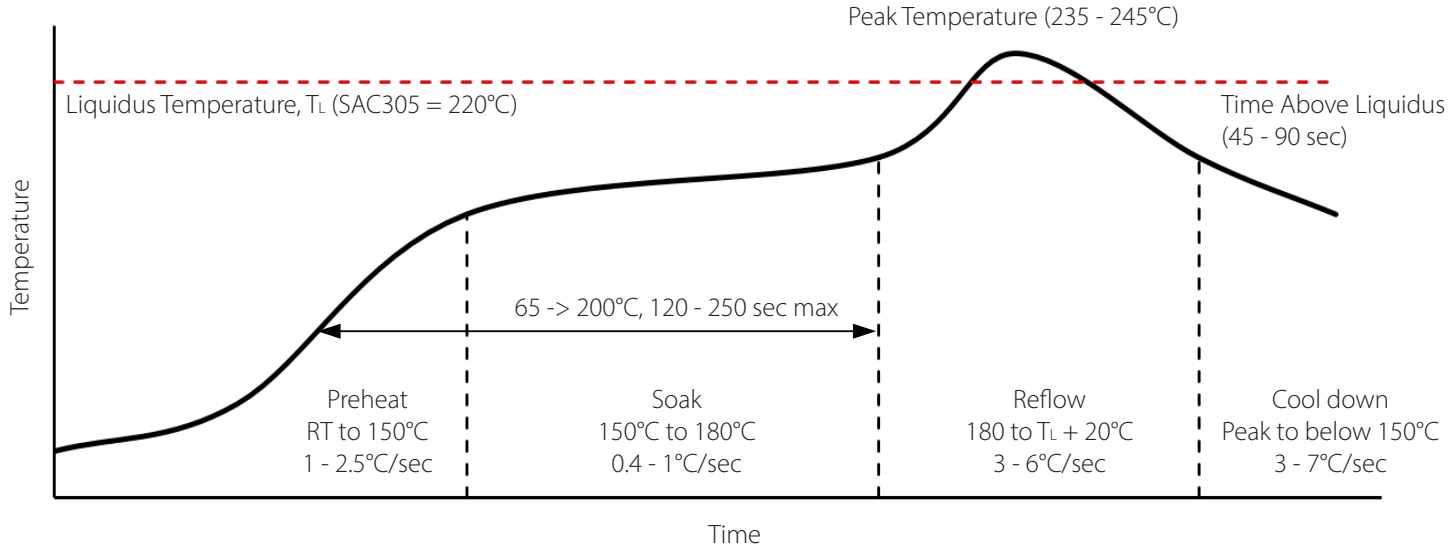

SMT Rework Guideline	Manual Hotplate Reflow	Hot Air Gun Reflow
Heating Time	< 60 sec	
Hotplate Temperature	< 245°C	< 150°C

Note:

1. Product complies to Moisture Sensitivity Level 1 (MSL 1).
2. The numbers in the table are specific to SAC305. Luminus recommends using an SAC305 solder paste with a no-clean flux for RoHS compliant products.
3. During the pick and place process, axial forces on the dome (or window) should not exceed 0.5 Newtons (N).
4. Use of a multi-zone IR reflow oven with a nitrogen blanket is recommended.
5. Time-temperature profile of the reflow process showing the four functional profile zones are defined in IPC-7801. Temperature is referenced to the center of the PCB.
6. Luminus recommends to use the solder paste data sheet information as a starting point in time-temperature process development.
7. These are general guidelines. Consult the solder paste manufacturer's datasheet for guidelines specific to the alloy and flux combination used in your application. For more information, please refer to:

   https://luminusdevices.zendesk.com/hc/en-us/articles/360060306692-How-do-I-Reflow-Solder-Luminus-SMD-Components-
8. For any technical questions about soldering process, please contact Luminus at techsupport@luminus.com.

Mechanical Dimensions-B50H

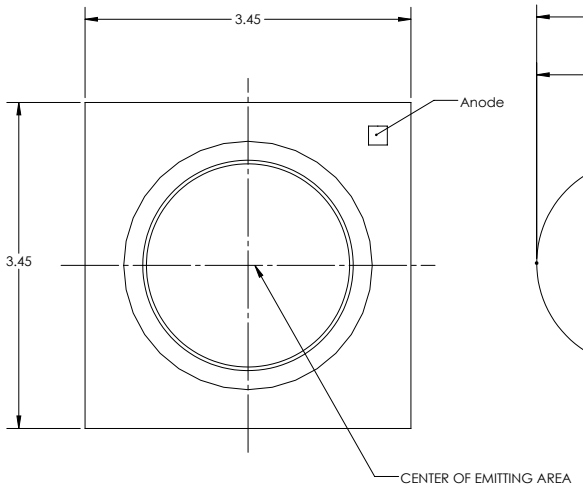

FRONT VIEW

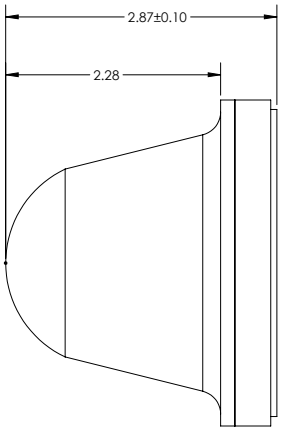

SIDE VIEW

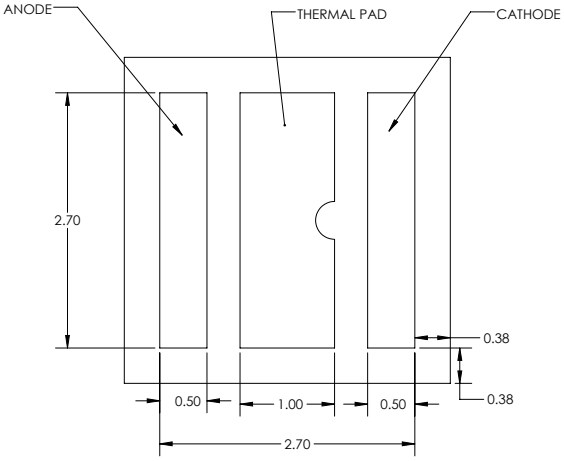

BACK VIEW

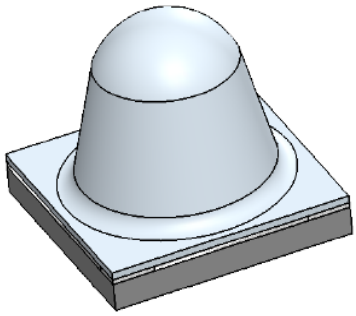

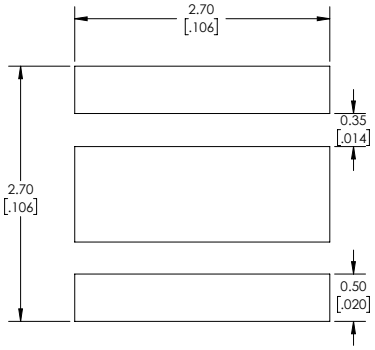

Recommended PCB Solder Pad

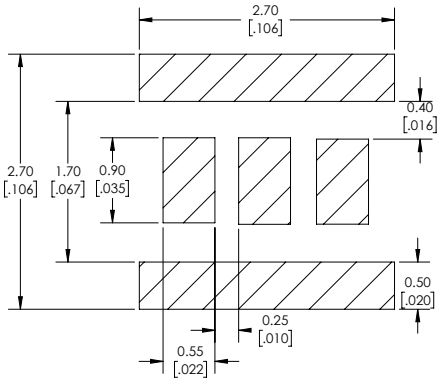

Recommended Stencil Pattern

Mechanical Dimensions-B90H

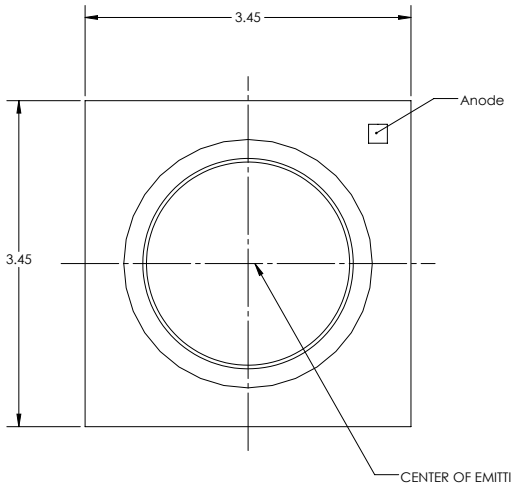

FRONT VIEW

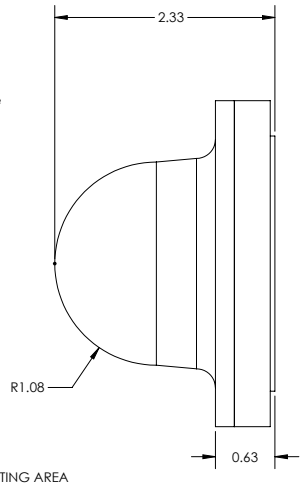

SIDE VIEW

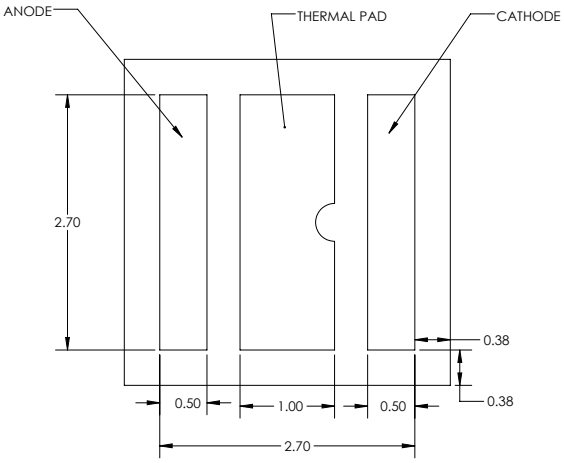

BACK VIEW

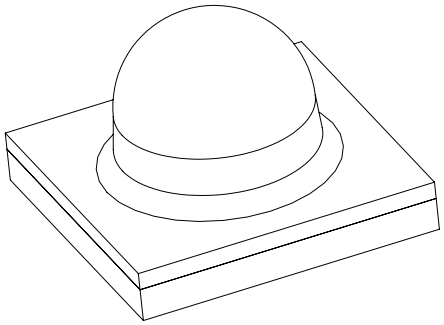

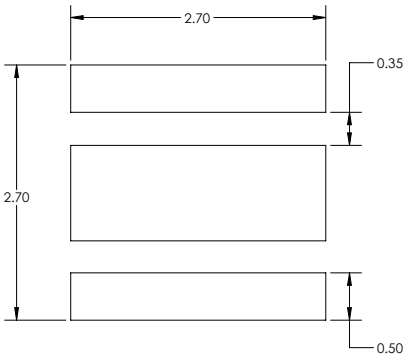

Recommended PCB Solder Pad

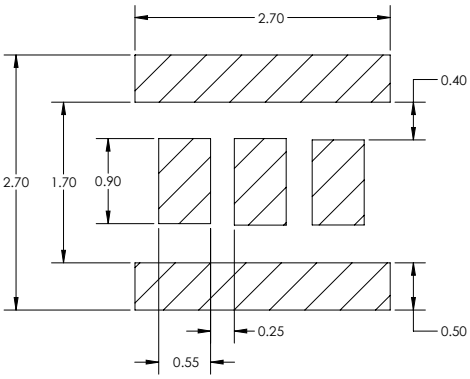

Recommended Stencil Pattern

Mechanical Dimensions-B130H

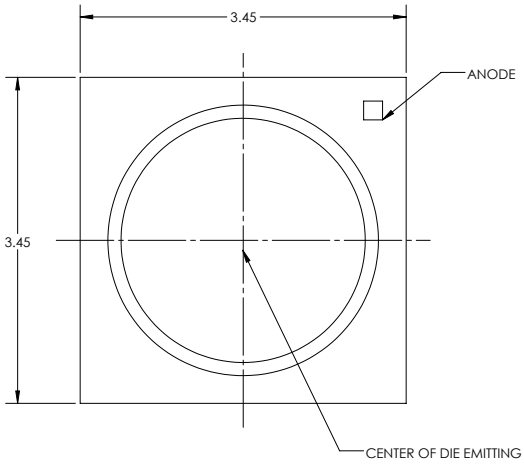

FRONT VIEW

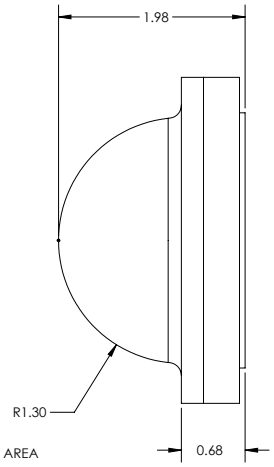

SIDE VIEW

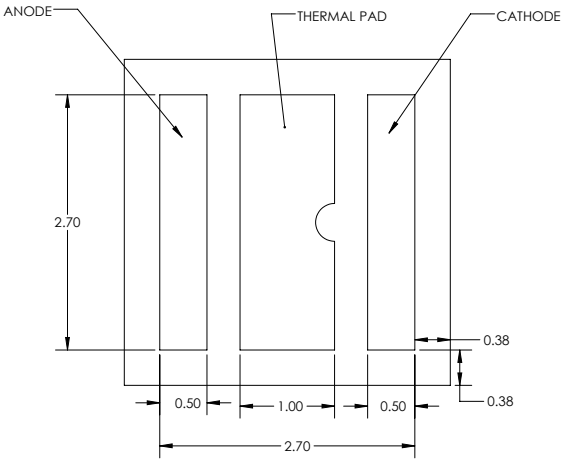

BACK VIEW

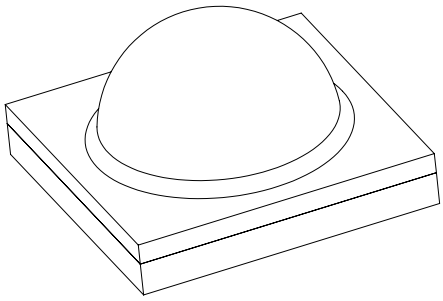

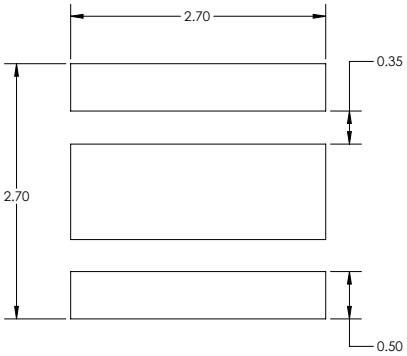

Recommended PCB Solder Pad

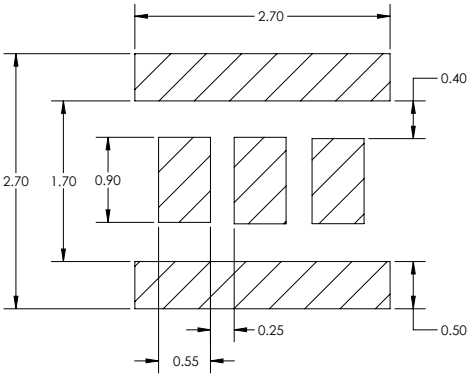

Recommended Stencil Pattern

Tape and Reel Outline-B50H and B90H

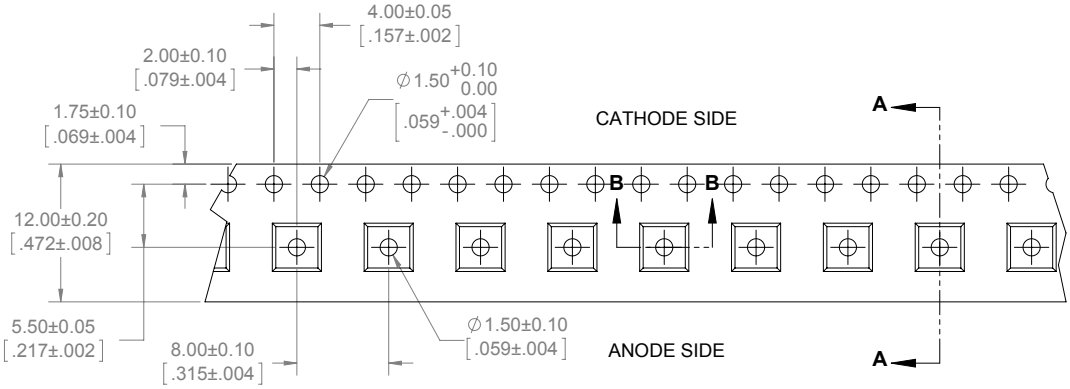

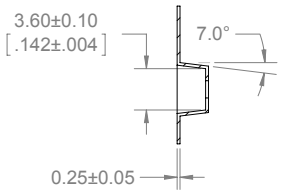

SECTION A-A

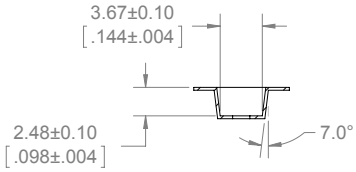

SECTION B-B

NOTES:

1. FINAL TAPE AND REEL PACKAGING MUST MEET THE REQUIREMENTS OF JEDEC-STD-033, LEVEL 2A.
2. LEAVE 304.8mm [12.00 in] OF TAPE EMPTY FOR LEAD IN (38 EMPTY POCKETS).
3. LEAVE 457.2mm [18.00 in] OF TAPE EMPTY FOR TRAILER (57 EMPTY POCKETS).
4. MUST COMPLY TO EIA-481-C-2003

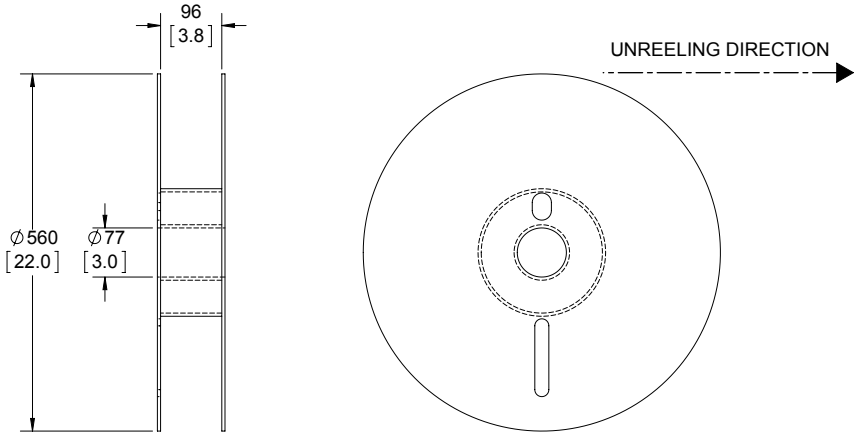

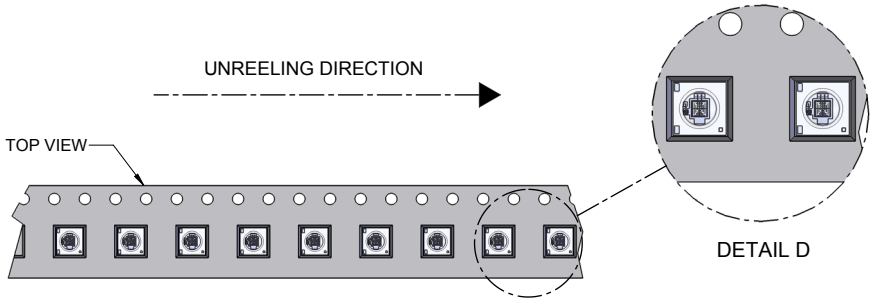

Tape and Reel Outline-B130H

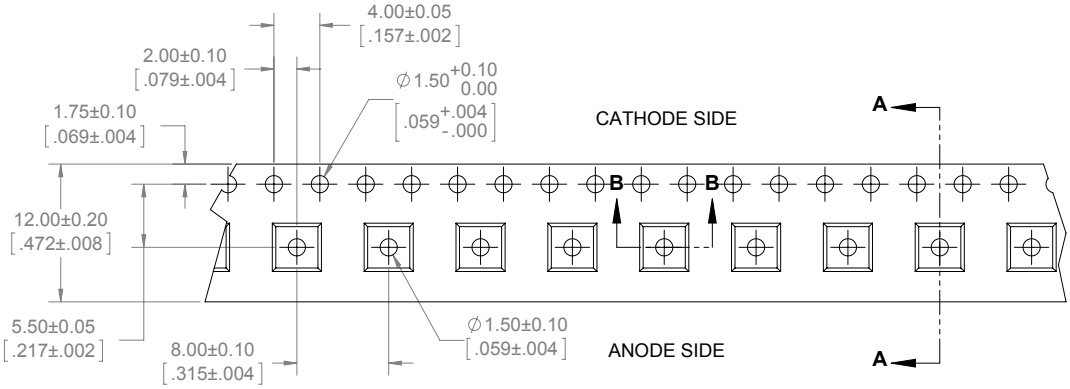

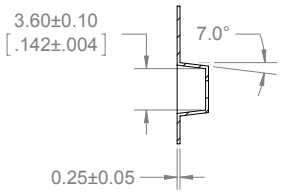

SECTION A-A

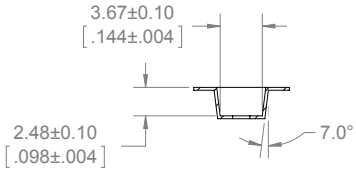

SECTION B-B

NOTES:

1. FINAL TAPE AND REEL PACKAGING MUST MEET THE REQUIREMENTS OF JEDEC-STD-033, LEVEL 2A.
2. LEAVE 304.8mm [12.00 in] OF TAPE EMPTY FOR LEAD IN (38 EMPTY POCKETS).
3. LEAVE 457.2mm [18.00 in] OF TAPE EMPTY FOR TRAILER (57 EMPTY POCKETS).
4. MUST COMPLY TO EIA-481-C-2003

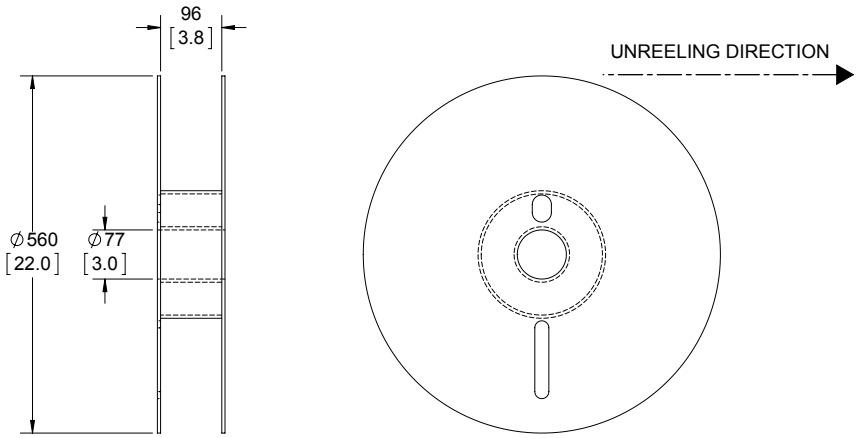

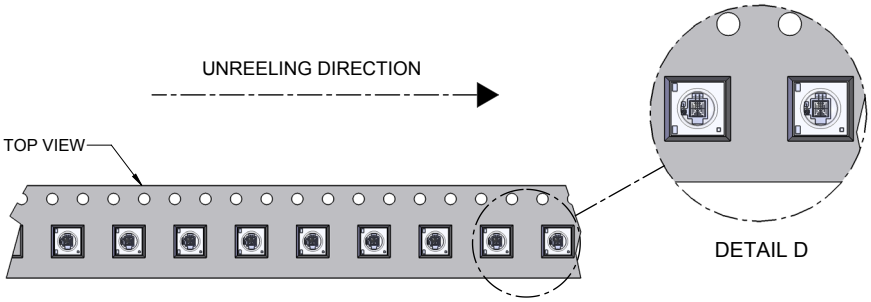

Shipping Label

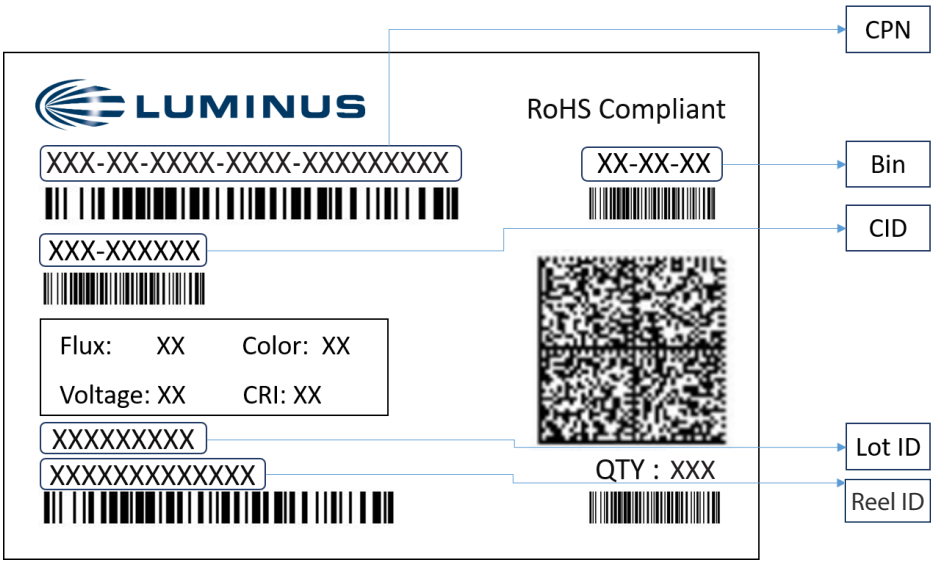

Label Fields:

- CPN: Luminus ordering part number
- CID: Customer's part number
- QTY: Quantity of devices in pack
- Flux: Bin as defined on page 3
- Voltage: Bin as defined on page 3
- Color: Bin as defined on page 3
- CRI: NA

Packing Configuration:

- 500 pieces per pack with 1 reel for B50H and B90H; 1,000 pieces per pack with 1 reel for B130H
- Partial pack or tray may be shipped
- Each pack is enclosed in anti-static bag
- Shipping label is placed on top of each pack

Notes

Static Electricity

This product is sensitive to static electricity, and care should be taken when handling them. Static electricity or surge voltage will damage the LEDs. It is recommended to wear an anti-electrostatic wristband or anti-electrostatic gloves when handling the LEDs. All devices, equipment and machinery must be properly grounded. It is recommended that measures be taken to isolate LED processing equipment from potential sources of voltage surges.

Reference: APN-002815 Electrical Stress Damage to LEDs and How to Prevent It

Corrosion Robustness

The LEDs passed the test: AEC-Q102 Rev A – Test Group C #12 - Corrosion Class A, without any significant change in electrical and optical characteristics.

Test condition: 25°C / 90 % RH / 15 ppm H2S / 14 days (stricter than IEC 60068-2-43)

Optical and Electrical Pass/Fail criteria as defined in AEC-Q102 Rev A – "Appendix 5: Parametric Test Requirements and Failure Criteria"

Corrosion test: Class 3B (discoloration possible)

Revision History

Rev	Date	Description of Change
01	05/19/2021	Initial release
02	12/10/2021	Updated flux bin
03	11/30/2023	Introduced Higher flux bins, updated typical values