REVISION			
LTR	DESCRIPTION	DATE	APP
A0	NEW RELEASE	05/20/2020	PECK

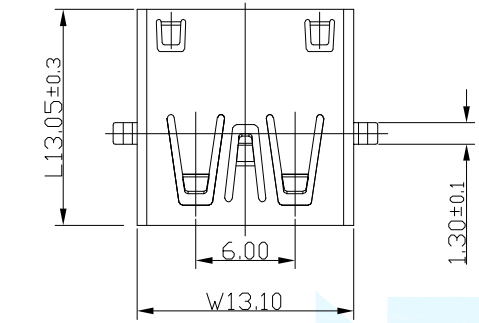

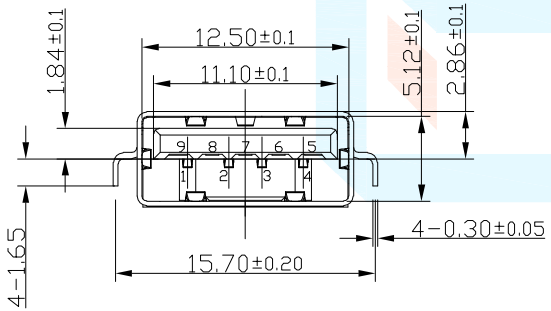

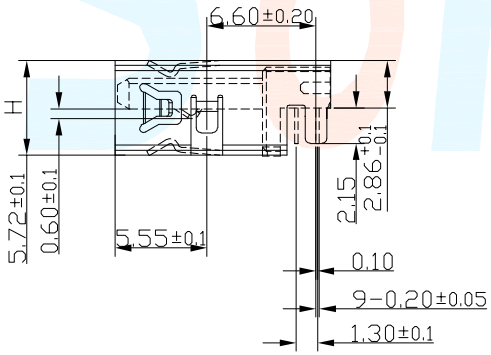

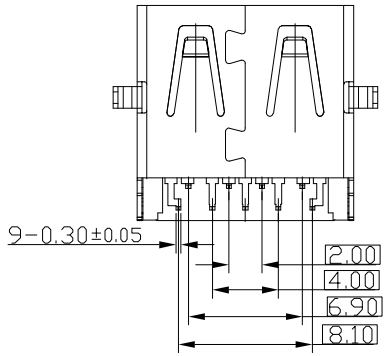

P.C.B LAYOUT

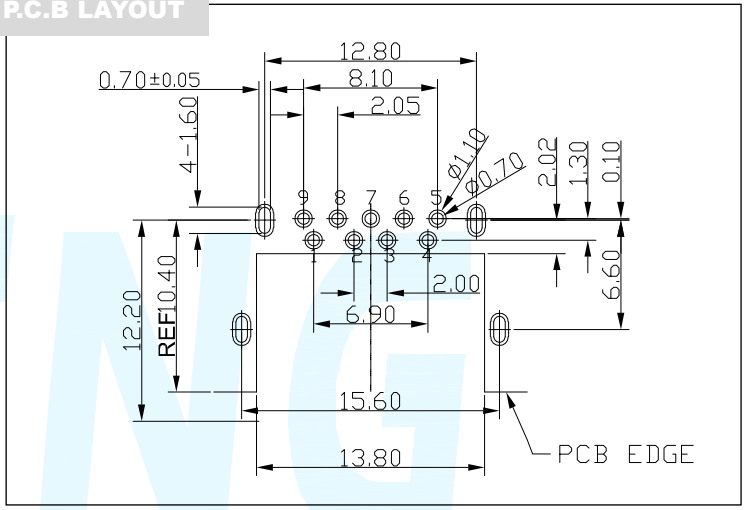

PIN SIGNAL

1	V BUS+	Power
2	Data-	USB2.0 differential pair
3	Data+	USB2.0 differential pair
4	GND	Ground for power retum
5	SSRXM-	SuperSpeed Receiver differential pair
6	SSRXP+	SuperSpeed Receiver differential pair
7	GND	Ground for power retum
8	SSTXM-	SuperSpeed Transmitter differential pair
9	SSTXP+	SuperSpeed Transmitter differential pair

Note:

1.Material:

1.1 Housing: High temperature thermoplastic,UL94v-0
1.2 Orbit: High temperature thermoplastic,UL94v-0
1.3 Contact: copper alloy,;
Gold plated contact area;Tin plated solder area
1.4 Shell:Stainless;Ni plated allover;
Gold plated solder area

2.Specification:

2.1 Current rating: 0.5A Max
2.2 Voltage rating: 12V DC
2.3 Dielectric withstanding woltage:
500V(AC) for 1 min.
2.4 Contact resistance: 100mΩ Max.
2.5 Insulation resistance: 1000MΩ min.
2.6 Temperature range: -25°C~85°C
2.7 Mating cycle:5000 cycles min
2.8 Insert force: 40N Max
Extration force: 0.5~40N

DIMENSION CLASSIFICATION			台灣碩方精密電子科技有限公司 TAIWAN SOFNG PRECISION ELECTRONIC CO., LTD					
■ : CRITICAL			TITLE	U30-03F 数据连接器3.0 USB插件沉板式			SOFNG 開關,連接器	
☒ : MAJOR								
TOLERANCE TABLE			PART NO.	U30-03F			SERIES	SD106
.X	±	0.40	APPROVED	Peck	DWG NO.	SOF-G006		
.XX	±	0.25	CHECKED	Paul	SCALE 1:1	UNIT mm	SIZE	A4
.XXX	±	0.10	DRAWIN	David		REV A0	SHEET NO.	1/1
ANGLE	±	2°						