DRW NO.	SH	REV
C-928-4000-600	1	A

ZONE	REV	SCR NUMBER	DESCRIPTION	BY	DATE	APPROVED
ALL	A	MHAN-9HHNBS.VER01	NEW RELEASE	HCL-JP	04/01/2014	M.HANRAHAN

TABLE 1

XCede HD RIGHTANGLE FEMALE POWER CONNECTOR
(8) ASSEMBLY PART NUMBER ASSIGNMENT

928 - 4 0 0 0 - A X X

XCede HD POWER MODULE LEAD OFF

4 = 4 PAIR

CONTACT LENGTH
7 = 4.5mm
8 = 5.5mm

PLATING:
D = NI SULFAMATE. STANDARD GOLD. LEADFREE
E = NI SULFAMATE. HIGH GOLD. LEADFREE
H = NANO NI. STANDARD GOLD. LEADFREE
J = NANO NI. HIGH GOLD. LEADFREE

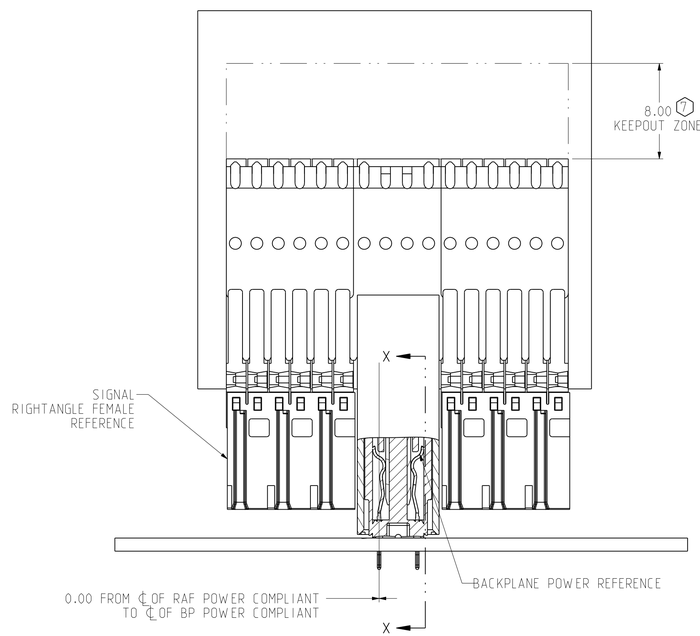

SECTION Y-Y
SCALE 4/1

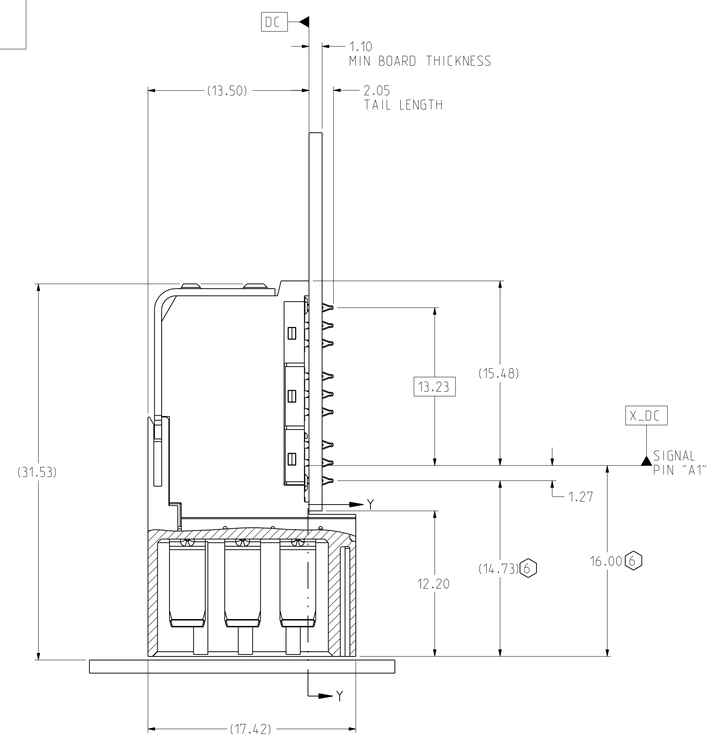

SECTION X-X
RAF POWER ONLY
SCALE 4/1

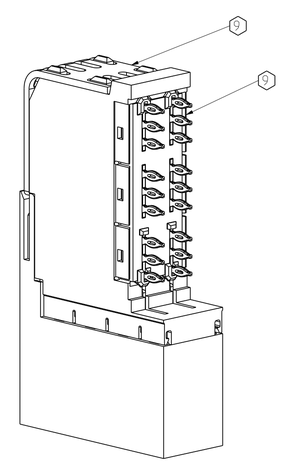

ISOMETRIC VIEW
SCALE 4/1

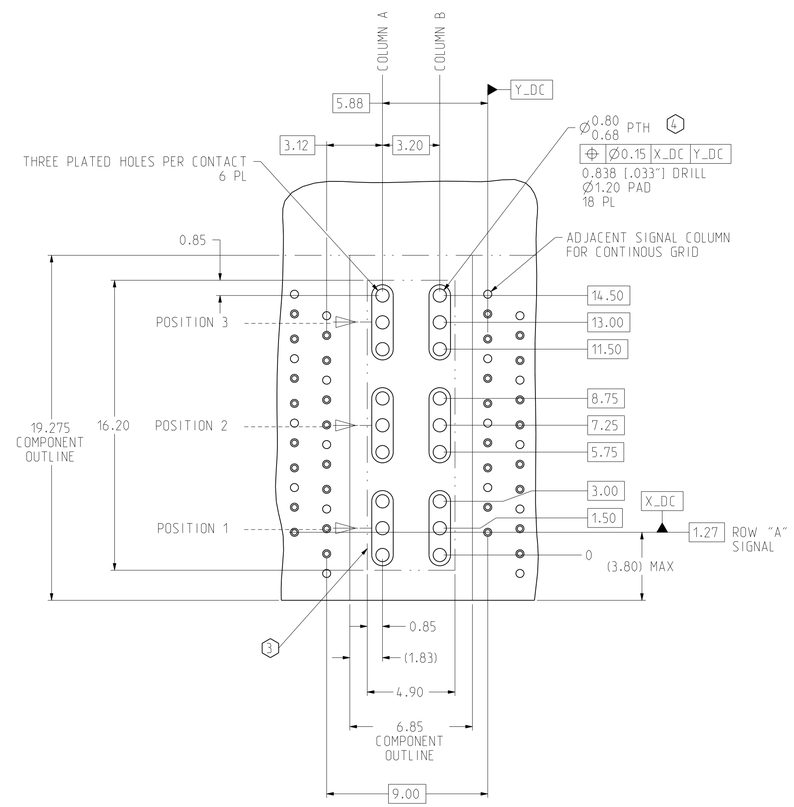

RECOMMENDED RIGHTANGLE FEMALE
POWER HOLE PATTERN
SCALE 6/1

NOTES:

1. CORRESPONDING BP DRAWING : C968-4100-500
2. USE 7.2mm NOMINAL FOR DAUGHTERCARD LAYOUT.
3. (3) NO SURFACE TRACES ALLOWED IN KEEPOUT ZONE.
4. (4) STATED PAD SIZE MAY REQUIRE FILLING. SEE TB-2237 FOR ROUTING GUIDELINES.
5. REFER TO TB 2235 FOR XCede HD PRODUCT SPECIFICATION.
6. (6) NOMINAL SEATED DIMENSION.
7. (7) FOR CONNECTOR REPAIRABILITY. USE KEEPOUT ZONE.
8. (8) REFER DRAWING C977-4000-600 FOR NON-STANDARD LOAD.
9. (9) ORGANIZER AND STIFFENER SHOWN FOR REFERENCE ONLY.

TOLERANCES	
0.0	±0.25
0.00	±0.13
0.000	± -
ANGLES	± 3°

DESIGN 03/21/2014 M.HANRAHAN
DRAWN 03/21/2014 HCL-WS
CHK 03/21/2014 M.HANRAHAN
APVD 03/21/2014 M.HANRAHAN

UNLESS OTHERWISE SPECIFIED DIMENSIONS ARE IN MM. DECIMAL MARKER IS A PERIOD

INTERPRET PER ASME Y14.5M

CODE IDENT 31413

CUSTOMER USE DRAWING

Amphenol TCS
A Division of Amphenol Corporation
200 Innovative Way, Nashua, NH 03062 603.879.3000

TITLE
RIGHT ANGLE FEMALE POWER ASSEMBLY
XCede HD 4 PAIR, GEN 2 MINI COMPLIANT PIN

PART NO.	REV
SEE PART NUMBER TREE	N/A
DRAWING NO. C-928-4000-600	REV A
ASSEM C928-4000-600	1.1
DRAWING C928-4000-600	A.0

SIZE D | SCALE 1/1 | SHEET 1 OF 1

DRW NO. C-928-4000-600 SH 1 REV A