	COUNT	DESCRIPTION OF REVISIONS	BY	CHKD	DATE		COUNT	DESCRIPTION OF REVISIONS	BY	CHKD	DATE
△					. .	△					. .
△					. .	△					. .
△					. .	△					. .

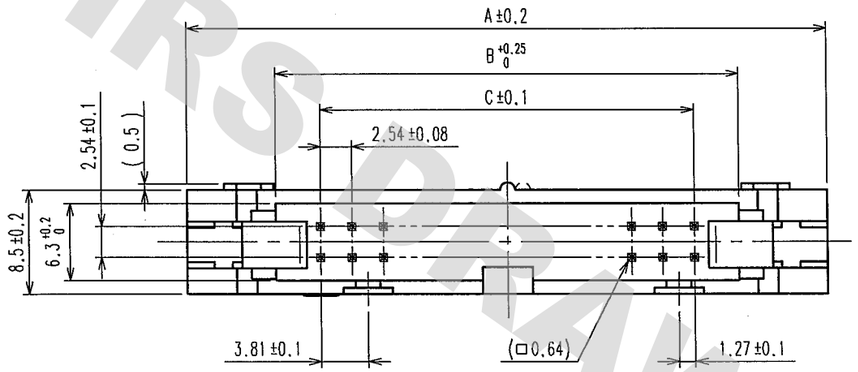

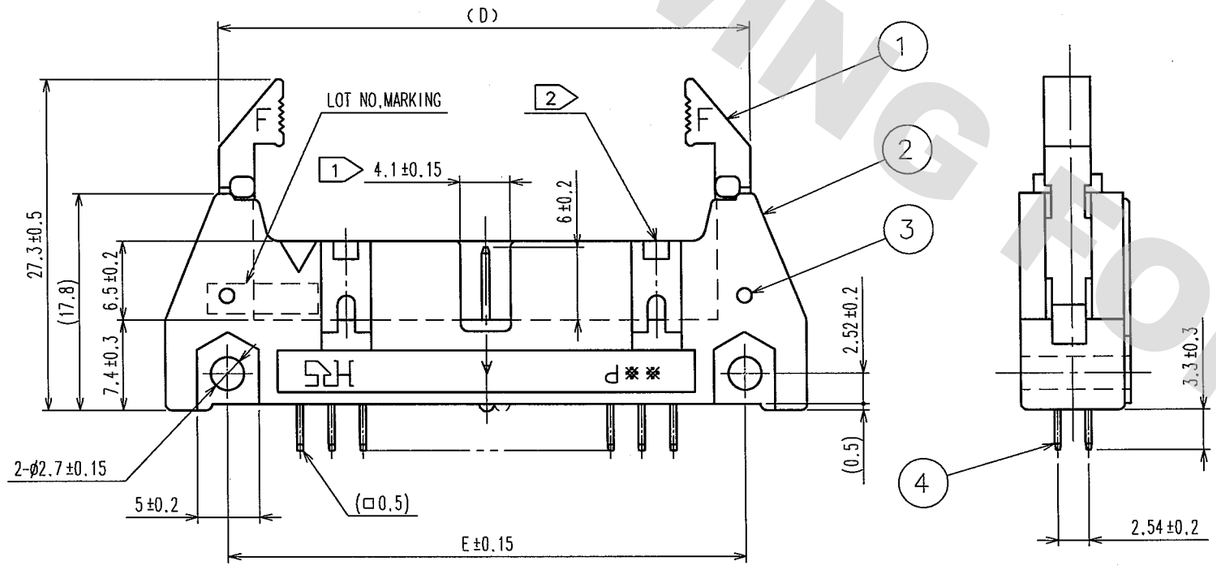

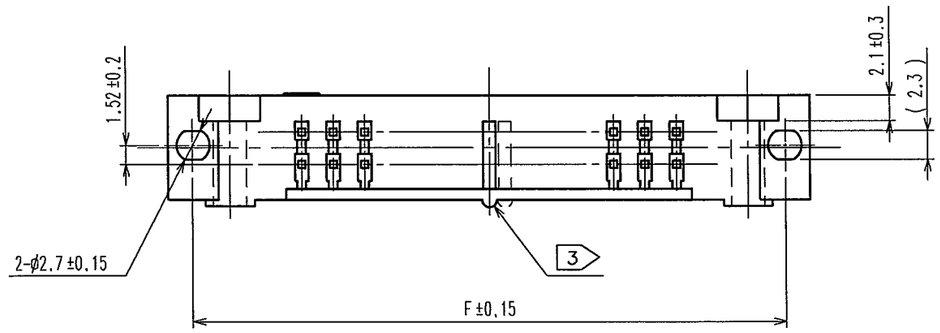

RECOMMENDEND PC BOARD HOLE PATTERN

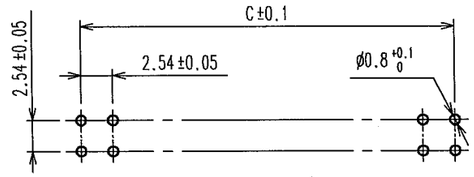

NOTES 1 2 THE NUMBER OF POLARIZING SLOT AND KEY INSTALLED POSITIONS CHANGES ACCORDING TO PRODUCTS. REFER TO THE LIST AS SHOWN BELOW.

3 THE SPACER MOVES TO THE RIGHT ACCORODING TO THE NUMBER OF CONTACTS.

4. THE 10,50 AND 60 CONTACT CONNECTORS CONTAIN TWO TYPES OF POLARIZING SLOTS. USE PRODUCTS, COMFIRMING 1, 2.

5 THE DIMENSIONS IN PARENTHESES SHOWS WHEN THE LOCK OPEN OUT.

6. ※※ INDICATES THE NUMBER OF CONTACTS.

7. THE DIMENSIONS IN PARENTHESES ARE FOR REFERENCE.

8 NUMBER OF CONTACTS.

PART No.	CODE No.	8	A	B	C	D 5	E	F	1 POLARIZING SLOT	2 POLARIZING KEY INSTALL
HIF3BAF-10PA-2.54DSA(71)	CL610-0251-7-71	10	32.0	17.5	10.16	23.7(41.7)	21.8	27.9	NONE	ONE ON RIGHT SIDE.
HIF3BDF-10PA-2.54DSA(71)	CL610-0631-8-71	10							ONE AT CENTER	NONE
HIF3BAF-14PA-2.54DSA(71)	CL610-0252-0-71	14	37.1	22.6	15.24	28.8(46.8)	26.9	33.0		ONE ON RIGHT SIDE.
HIF3BAF-16PA-2.54DSA(71)	CL610-0253-2-71	16	39.6	25.1	17.78	31.4(49.4)	29.5	35.5		ONE ON RIGHT AND LEFT SIDES,RESP.
HIF3BAF-20PA-2.54DSA(71)	CL610-0254-5-71	20	44.7	30.2	22.86	36.4(54.4)	34.5	40.6		
HIF3BAF-26PA-2.54DSA(71)	CL610-0255-8-71	26	52.3	37.8	30.48	44.1(62.1)	42.2	48.3		
HIF3BAF-30PA-2.54DSA(71)	CL610-0256-0-71	30	57.4	42.9	35.56	49.1(67.1)	47.2	53.3		
HIF3BAF-34PA-2.54DSA(71)	CL610-0257-3-71	34	62.5	48.0	40.64	54.2(72.2)	52.3	58.4		
HIF3BAF-40PA-2.54DSA(71)	CL610-0258-6-71	40	70.1	55.6	48.26	61.8(79.8)	59.9	66.0		
HIF3BAF-50PA-2.54DSA(71)	CL610-0259-9-71	50	82.8	68.3	60.96	74.5(92.5)	72.6	78.7	ONE ON RIGHT AND LEFT SIDES,RESP.	
HIF3BBF-50PA-2.54DSA(71)	CL610-0571-8-71	50							ONE AT CENTER	
HIF3BAF-60PA-2.54DSA(71)	CL610-0260-8-71	60	95.5	81.0	73.66	87.2(105.2)	85.3	91.4	ONE ON RIGHT AND LEFT SIDES,RESP.	
HIF3BBF-60PA-2.54DSA(71)	CL610-0572-0-71	60							ONE AT CENTER	
HIF3BAF-64PA-2.54DSA(71)	CL610-0261-0-71	64	100.6	86.1	78.74	92.3(110.3)	90.4	96.5	ONE ON RIGHT AND LEFT SIDES,RESP.	

NO.	MATERIAL	FINISH, REMARKS
3	STAINLESS	
1,2	PBT	BLACK UL94V-0

NO.	MATERIAL	FINISH, REMARKS
4	BRASS	CONTACT AREA : GOLD 0.2μm min DIP AREA : TIN-PLATING 2μm min UNDER PLATING : NICKEL 2.5μm min

CODE NO.(OLD)	DRAWN	DESIGNED	CHECKED	APPROVED	RELEASED
CL	I.OKAYAMA 04.07.06	K.NAKAMURA 04.07.06	H.Ozawa '04.07.08	H.Okawa '04.07.08	. .

SCALE FREE

UNITS mm

DRAWING NO. EDC3-154455-21

HRS HIROSE ELECTRIC CO., LTD

PART NO. BAF HIF3BBF-**PA-2.54DSA(71) BDF

CODE NO. CL610

1/1

TO
PCK

DRAWING FOR REFERENCE: This is subject to change without notice
08/11/2012

HRS DRAWING FOR REFERENCE