ZONE	REV	SCR NUMBER	DESCRIPTION	BY	DATE	APPROVED
ALL	A	CWAG-9B27H5.VER01	NEW RELEASE	HCL-PG	09/17/2013	C.WANG
SHT 3 B3 SHT 4 B1 SHT 3 A4 SHT 4 A5	B	MHAN-9QUJ9P.VER01	ADDED 2.45±0.05 DIM TO PCB VIEWS ADDED NOTE "SCREW NOT INCLUDED" REPLACED DC MODULE FROM WAVE TO BIFURCATE	HCL-WS	01/06/2015	M.HANRAHAN
SHT 1 A8	C	MHAN-9ZYQTJ.VER01	CORRECTED NOTE 10. C-914-4010-000 WAS C-914-4000-000	HCL-NB	09/07/2015	M.HANRAHAN
SHT1 C7 SHT1 C4	D	DCOY-A2DKPQ.VER01	REMOVED N AND Z OPTIONS FROM POL GUIDE TABLE. REMOVED ROLLED GUIDE PIN OPTION IN PIN STYLE TABLE.	HCL-NB	10/16/2015	D.COVEY

923 - 4 X 0 J - X X X

- 923 — XCede HD BACKPLANE MODULE MALE STANDARD LOAD
- 4 — 4 PAIR
- 0 — 4-POSITION

LETTER									
LEFT POLARIZING GUIDANCE (SEE SHEET 3)	J (NO KEY)	A	B	C	D	E	F	G	H
RIGHT POLARIZING GUIDANCE (SEE SHEET 4)	Y (NO KEY)	P	Q	R	S	T	U	V	W
OPEN (SEE SHEET 2)	O (ZERO)								
LEFT WALL (SEE SHEET 5)	L								
RIGHT WALL (SEE SHEET 6)	M								
TWO WALL (SEE SHEET 7)	1								

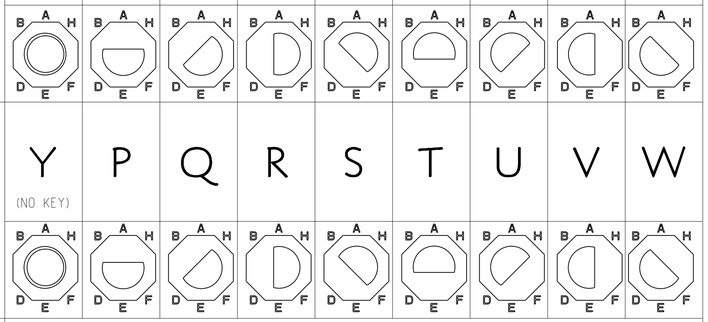

NUMBER	PIN STYLE, HEIGHT
0	GUIDE PIN MACHINED, 28.5mm / OPEN MODULE

NUMBER	SIGNAL & LG. GROUND WIPE LENGTH, COMPLIANT PIN SIZE
1	2 mm WIPE SIGNAL, 4 mm WIPE LG GND, Ø.0217" DRILL
2	3 mm WIPE SIGNAL, 4 mm WIPE LG GND, Ø.0217" DRILL
3	2 mm WIPE SIGNAL, 4 mm WIPE LG GND, Ø.0177" DRILL
4	3 mm WIPE SIGNAL, 4 mm WIPE LG GND, Ø.0177" DRILL
5	2 mm WIPE SIGNAL, 3 mm WIPE LG GND, Ø.0217" DRILL
6	3 mm WIPE SIGNAL, 3 mm WIPE LG GND, Ø.0217" DRILL
7	2 mm WIPE SIGNAL, 3 mm WIPE LG GND, Ø.0177" DRILL
8	3 mm WIPE SIGNAL, 3 mm WIPE LG GND, Ø.0177" DRILL
C	2 mm WIPE SIGNAL, 2 mm WIPE LG GND. Ø.0217" DRILL
D	2 mm WIPE SIGNAL, 2 mm WIPE LG GND. Ø.0177" DRILL

LETTER	PLATING
B	NI SULFAMATE, STANDARD GOLD, LEADED
C	NI SULFAMATE, HIGH GOLD, LEADED
D	NI SULFAMATE, STANDARD GOLD, LEADFREE
E	NI SULFAMATE, HIGH GOLD, LEADFREE
F	NANO NI, STANDARD GOLD, LEADED
G	NANO NI, HIGH GOLD, LEADED
H	NANO NI, STANDARD GOLD, LEADFREE
J	NANO NI, HIGH GOLD, LEADFREE

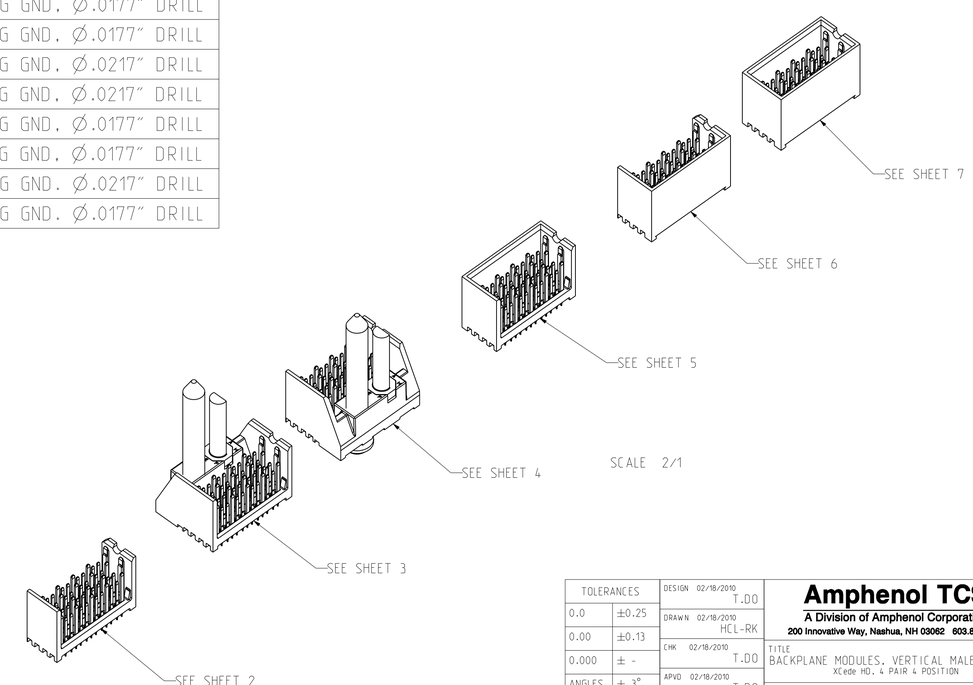

SCALE 2/1

NOTES:

1. REFER TO TB-2308 FOR XCede HD PRODUCT SPECIFICATIONS.
2. NOTCH DESIGNATES "ROW A" SIDE OF SHROUD. NOTCH FEATURE ON OPPOSITE SIDE FROM PART MARKING.
3. PART MARKING AS FOLLOWS:
   - LINE 1: "ATCS" AND DATECODE (ATCS YYWW).
   - LINE 2: MODULE PART NUMBER (923-####-###).
   - LINE 3: WORK ORDER NUMBER (###*######).
   - WHERE "*" DENOTES MANUFACTURING LOCATION.
4. PLATING THICKNESS OF SIGNAL CONTACT AND GROUND CONTACT IS DETERMINED BY PLATING CODE. SEE PART NUMBER TREE SHEET 1.
5. REPAIR PROCEDURE FOR MODULE. SEE TB-2245.
6. SEE TB-2237 FOR ROUTING GUIDELINES & PTH REQ'S.
7. SEE DOC XXXX-XXXX-XXX FOR TOOLING KEEPOUT ZONES.
8. BACKPLANE DATUM REFERENCE.
9. DIMENSIONS APPLY FOR BOTH COMPLIANT PIN SIZES.
10. OPTIONAL HOLE/MOUNTING SCREW LOCATION FOR GROUNDED PIN OR ADDITIONAL GUIDE PIN SUPPORT. SEE DRAWING C-914-4010-000 FOR OPTIONAL HOLE DETAILS. ONLY APPLIES FOR MACHINED GUIDE PIN APPLICATIONS.

TOLERANCES	
0.0	±0.25
0.00	±0.13
0.000	± -
ANGLES	± 3°

UNLESS OTHERWISE SPECIFIED DIMENSIONS ARE IN MM. DECIMAL MARKER IS A PERIOD

INTERPRET PER ASME Y14.5M

CODE IDENT 31413

CUSTOMER USE DRAWING

DESIGN 02/18/2010 T.DO
DRAWN 02/18/2010 HCL-RK
CHK 02/18/2010 T.DO
APVD 02/18/2010 T.DO

Amphenol TCS
A Division of Amphenol Corporation
200 Innovative Way, Nashua, NH 03062 603.879.3000

TITLE BACKPLANE MODULES, VERTICAL MALE HEADER
XCede HD, 4 PAIR 4 POSITION

PART NO. SEE PN TREE SHEET 1 | REV N/A
DRAWING NO. C-923-400J-500 | REV D
ASSEM: C923-400J-500 1.2
DRAWING: C923-400J-500 A.7
SIZE D | SCALE 1/1 | SHEET 1 OF 8

DRW NO. C-923-400J-500 | SH 1 | REV D

ZONE	REV	SCR NUMBER	DESCRIPTION	BY	DATE	APPROVED
			SEE SHEET 1			

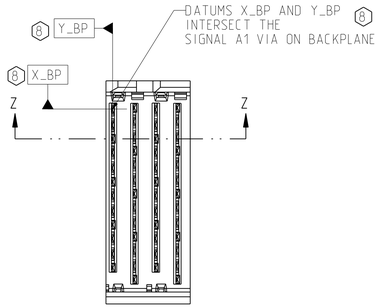

OPEN BACKPLANE MODULE DIMENSION

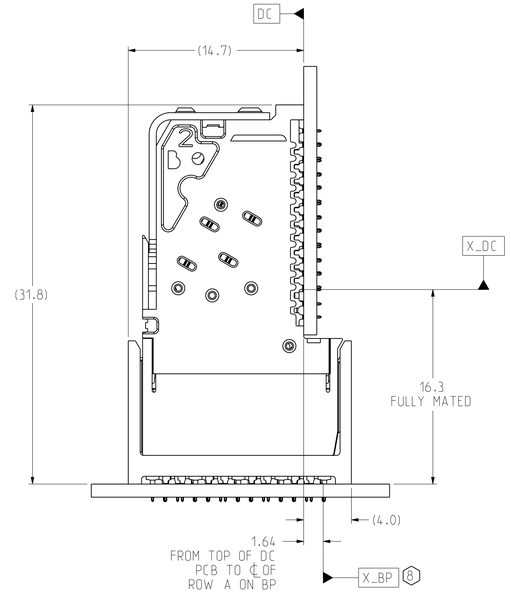

CONNECTOR REFERENCE
SCALE 4/1

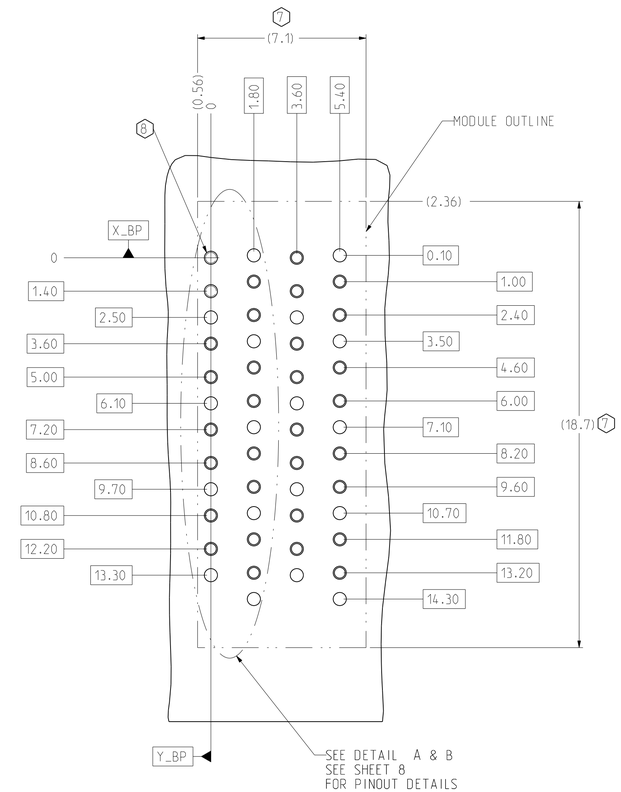

BP HOLE PATTERN
COMPONENT SIDE
SCALE 8/1

OPEN BACKPLANE FOOTPRINT

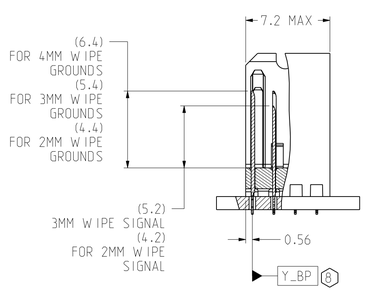

SECTION Z-Z

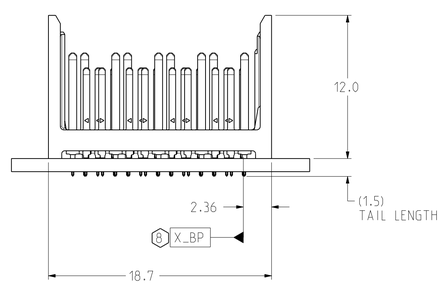

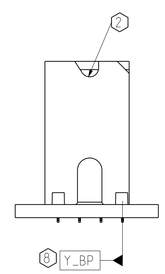

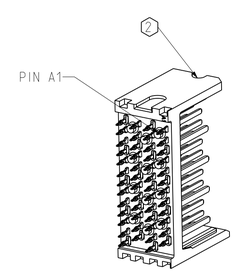

ISOMETRIC VIEW
SCALE 3/1

TOLERANCES	
0.0	±0.25
0.00	±0.13
0.000	± -
ANGLES	± 3°

UNLESS OTHERWISE SPECIFIED DIMENSIONS ARE IN MM. DECIMAL MARKER IS A PERIOD

INTERPRET PER ASME Y14.5M

CODE IDENT 31413

CUSTOMER USE DRAWING

DESIGN 02/18/2010 T.DO
DRAWN 02/18/2010 HCL-RK
CHK 02/18/2010 T.DO
APVD 02/18/2010 T.DO

Amphenol TCS
A Division of Amphenol Corporation
200 Innovative Way, Nashua, NH 03062 603.879.3000

TITLE BACKPLANE MODULES, VERTICAL MALE HEADER
XCede HD, 4 PAIR 4 POSITION

PART NO. SEE PN TREE SHEET 1 REV N/A
DRAWING NO. C-923-400J-500 REV D
ASSEM C923-400J-500 1.2
DRAWING C923-400J-500 A.7
SIZE D SCALE 1/1 SHEET 2 OF 8

DRW NO.	SH	REV
C-923-400J-500	3	D

ZONE	REV	SCR NUMBER	DESCRIPTION	BY	DATE	APPROVED
			SEE SHEET 1			

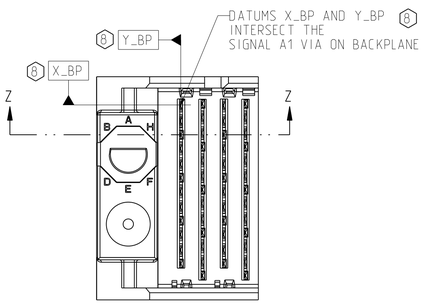

LEFT POLARIZING/GUIDE BACKPLANE MODULE DIMENSION

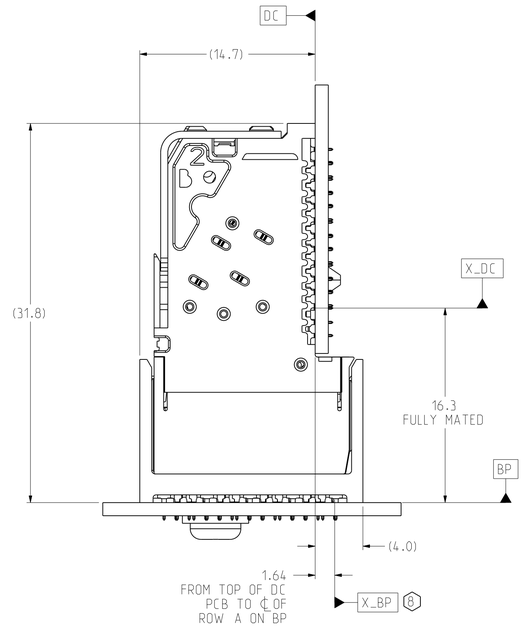

CONNECTOR REFERENCE
SCALE 4/1

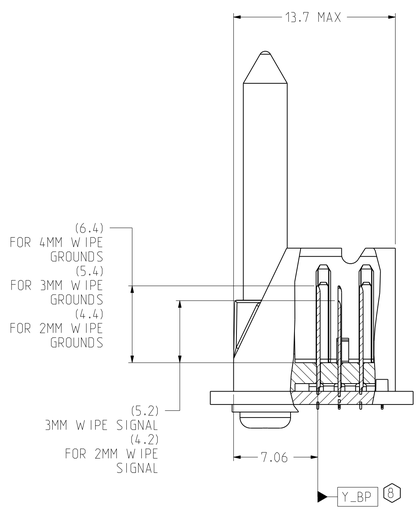

SECTION Z-Z

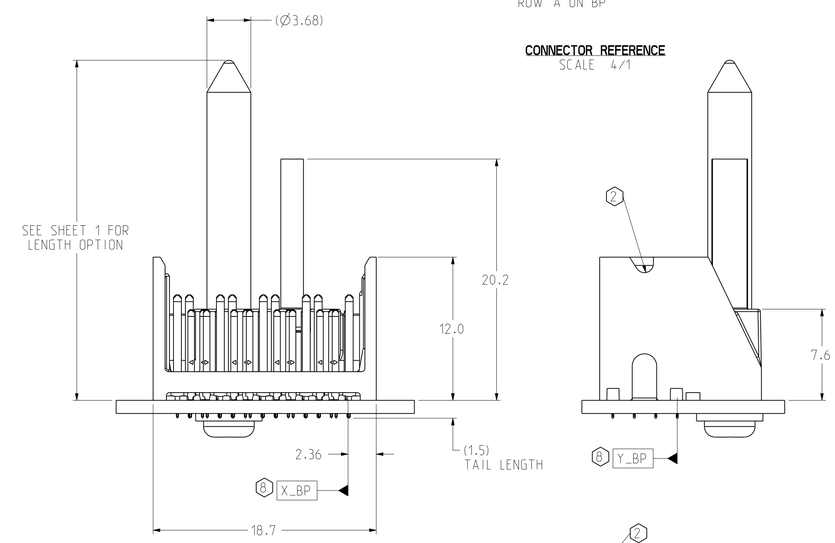

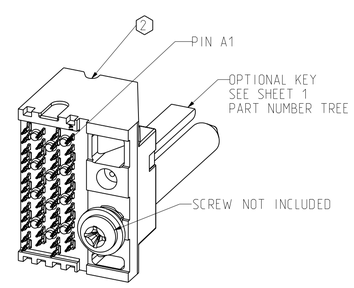

ISOMETRIC VIEW
SCALE 3/1

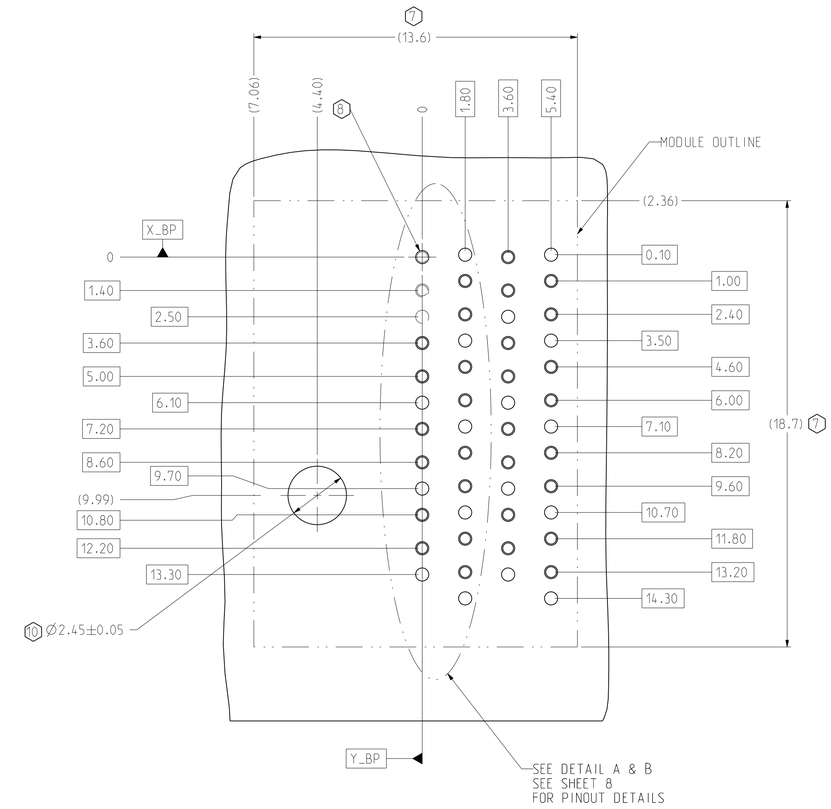

BP HOLE PATTERN
COMPONENT SIDE
SCALE 8/1

LEFT POLARIZING/GUIDE BACKPLANE FOOTPRINT

TOLERANCES	
0.0	±0.25
0.00	±0.13
0.000	± -
ANGLES	± 3°

UNLESS OTHERWISE SPECIFIED DIMENSIONS ARE IN MM. DECIMAL MARKER IS A PERIOD

DESIGN 02/18/2010	T.DO
DRAWN 02/18/2010	HCL-RK
CHK 02/18/2010	T.DO
APVD 02/18/2010	T.DO

Amphenol TCS
A Division of Amphenol Corporation
200 Innovative Way, Nashua, NH 03062 603.879.3000

TITLE
BACKPLANE MODULES, VERTICAL MALE HEADER
XCede HD, 4 PAIR 4 POSITION

PART NO.	REV.
SEE PN TREE SHEET 1	N/A
DRAWING NO. C-923-400J-500	REV D
ASSEM: C923-400J-500 / DRAWING: C923-400J-500	1.2 / A.7

INTERPRET PER ASME Y14.5M

CODE IDENT 31413

CUSTOMER USE DRAWING

SIZE D | SCALE 1/1 | SHEET 3 OF 8

DRW NO. C-923-400J-500 | SH 3 | REV D

DRW NO.	SH	REV
C-923-400J-500	4	D

ZONE	REV	SCR NUMBER	DESCRIPTION	BY	DATE	APPROVED
			SEE SHEET 1			

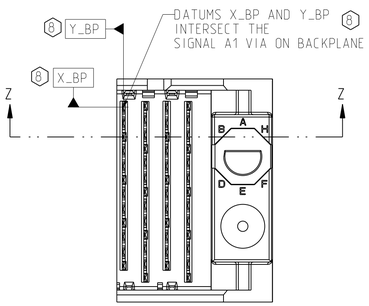

RIGHT POLARIZING/GUIDE BACKPLANE MODULE DIMENSION

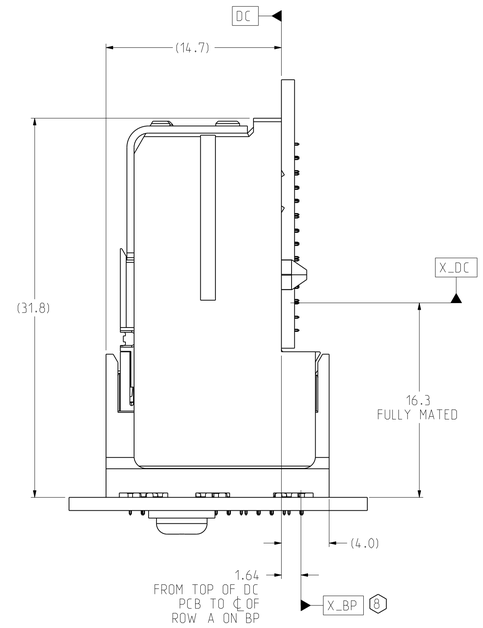

CONNECTOR REFERENCE
SCALE 4/1

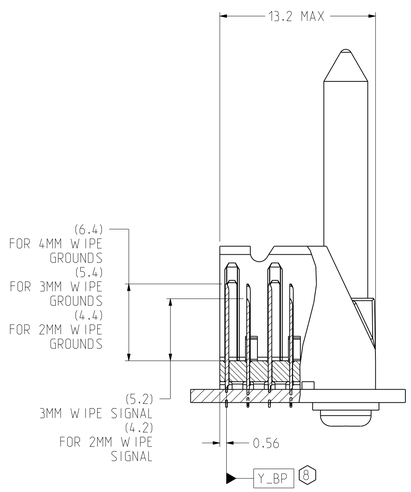

SECTION Z-Z

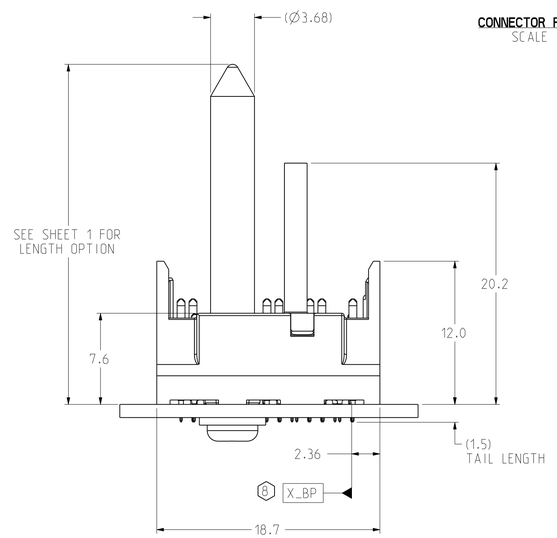

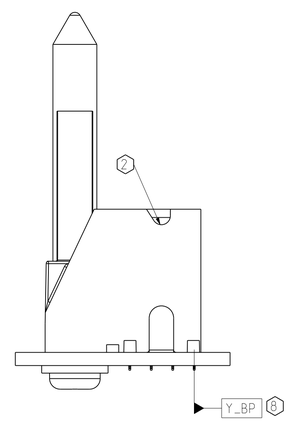

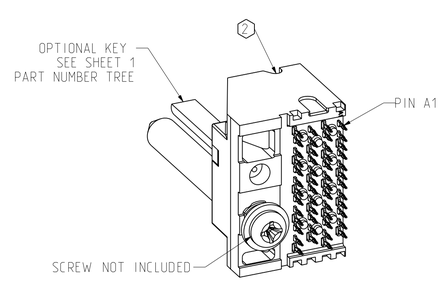

ISOMETRIC VIEW
SCALE 3/1

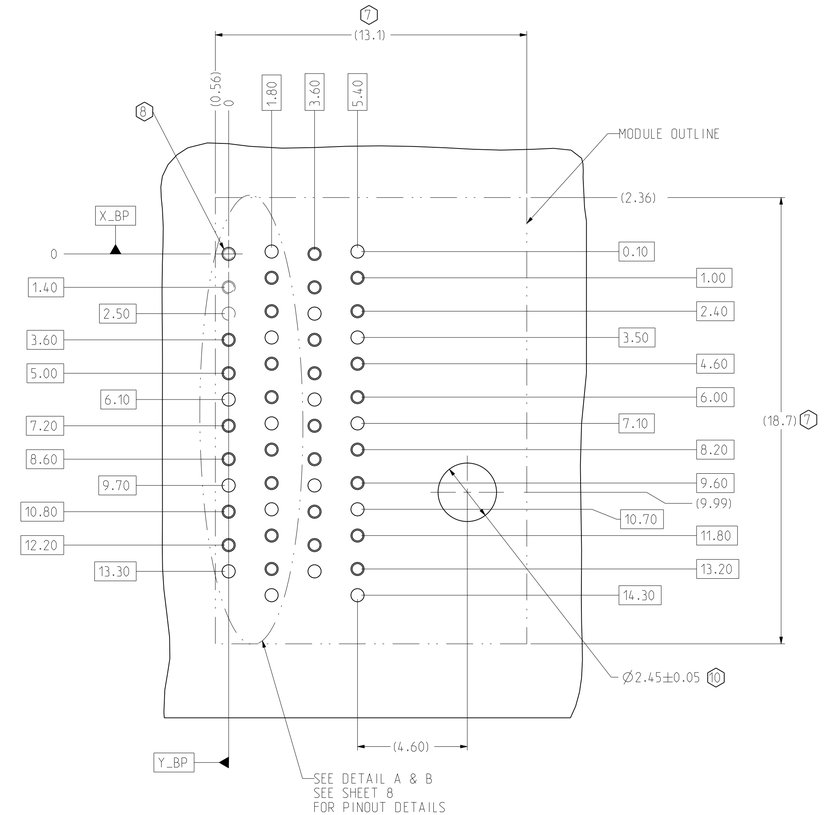

BP HOLE PATTERN
COMPONENT SIDE
SCALE 8/1

RIGHT POLARIZING/GUIDE BACKPLANE FOOTPRINT

TOLERANCES	
0.0	±0.25
0.00	±0.13
0.000	± -
ANGLES	± 3°

UNLESS OTHERWISE SPECIFIED DIMENSIONS ARE IN MM. DECIMAL MARKER IS A PERIOD

DESIGN 02/18/2010	T.DO	
DRAWN 02/18/2010	HCL-RK	
CHK 02/18/2010	T.DO	
APVD 02/18/2010	T.DO	

Amphenol TCS
A Division of Amphenol Corporation
200 Innovative Way, Nashua, NH 03062 603.879.3000

TITLE
BACKPLANE MODULES, VERTICAL MALE HEADER
XCede HD, 4 PAIR 4 POSITION

PART NO. SEE PN TREE SHEET 1 — REV. N/A

DRAWING NO. C-923-400J-500 — REV D

ASSEM: C923-400J-500 — 1.2
DRAWING: C923-400J-500 — A.7

INTERPRET PER ASME Y14.5M

CUSTOMER USE DRAWING

CODE IDENT 31413

SIZE D | SCALE 1/1 | SHEET 4 OF 8

DRW NO. C-923-400J-500 | SH 4 | REV D

ZONE	REV	SCR NUMBER	DESCRIPTION	BY	DATE	APPROVED
			SEE SHEET 1			

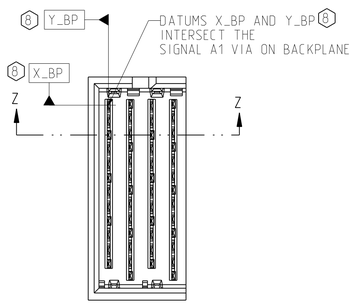

LEFT WALL BACKPLANE MODULE DIMENSION

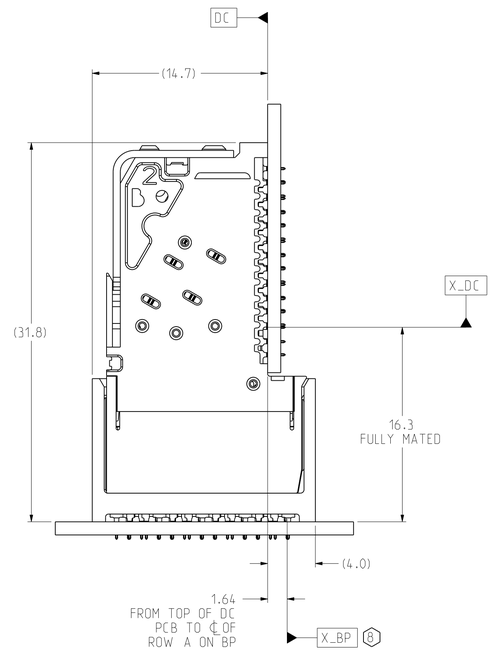

CONNECTOR REFERENCE
SCALE 4/1

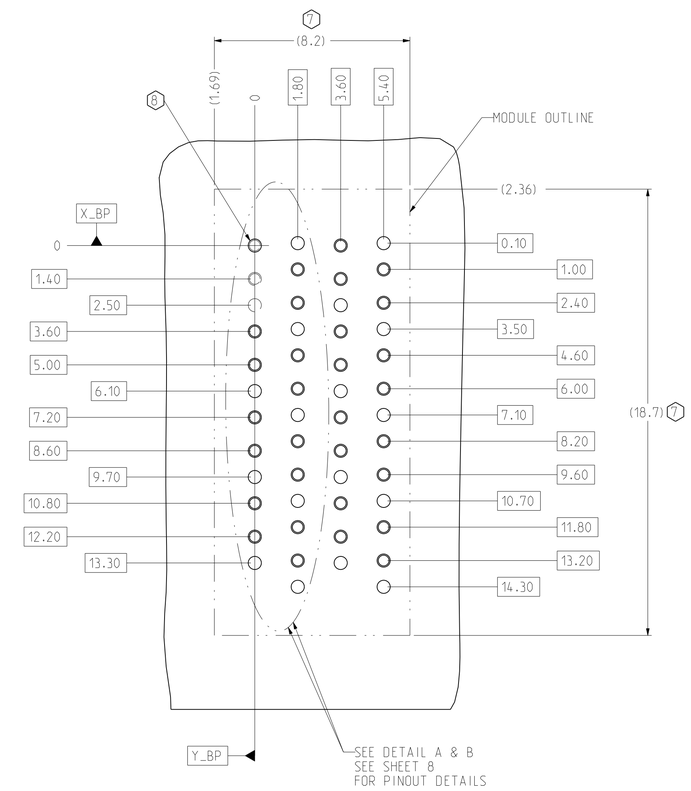

BP HOLE PATTERN
COMPONENT SIDE
SCALE 8/1

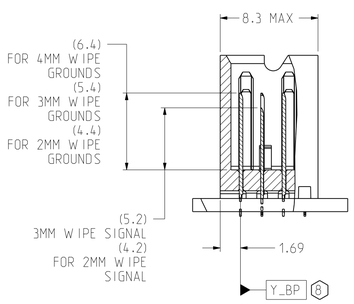

SECTION Z-Z

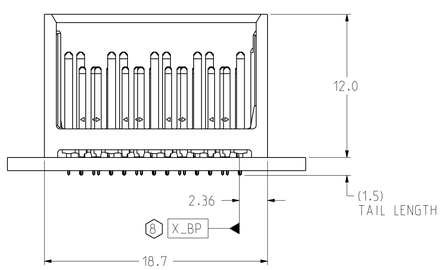

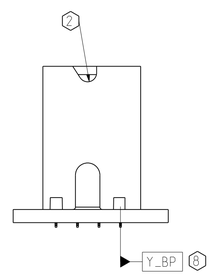

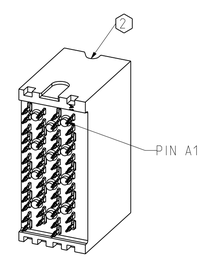

ISOMETRIC VIEW
SCALE 3/1

LEFT WALL BACKPLANE FOOTPRINT

TOLERANCES	
0.0	±0.25
0.00	±0.13
0.000	± -
ANGLES	± 3°

UNLESS OTHERWISE SPECIFIED DIMENSIONS ARE IN MM. DECIMAL MARKER IS A PERIOD

INTERPRET PER ASME Y14.5M

CODE IDENT 31413

CUSTOMER USE DRAWING

DESIGN 02/18/2010 T.DO
DRAWN 02/18/2010 HCL-RK
CHK 02/18/2010 T.DO
APVD 02/18/2010 T.DO

Amphenol TCS
A Division of Amphenol Corporation
200 Innovative Way, Nashua, NH 03062 603.879.3000

TITLE BACKPLANE MODULES, VERTICAL MALE HEADER
XCede HD, 4 PAIR 4 POSITION

PART NO. SEE PN TREE SHEET 1 — REV N/A
DRAWING NO. C-923-400J-500 — REV D
ASSEM: C923-400J-500 1.2
DRAWING: C923-400J-500 A.7

SIZE D | SCALE 1/1 | SHEET 5 OF 8

DRW NO. C-923-400J-500 SH 5 REV D

ZONE	REV	SCR NUMBER	DESCRIPTION	BY	DATE	APPROVED
			SEE SHEET 1			

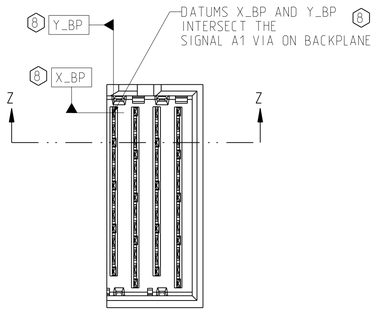

RIGHT WALL BACKPLANE MODULE DIMENSION

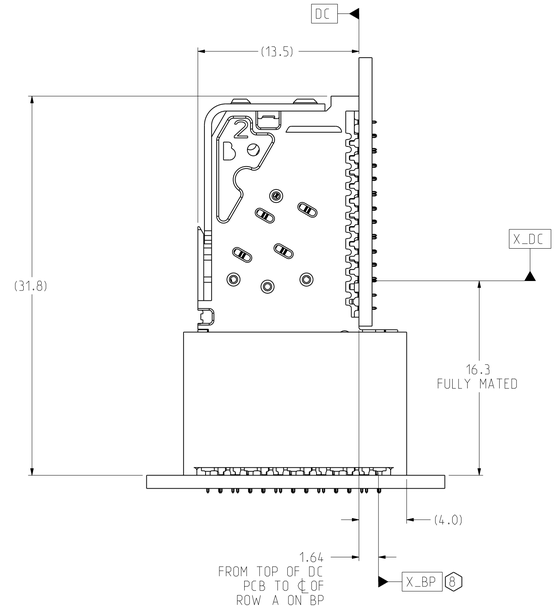

CONNECTOR REFERENCE
SCALE 4/1

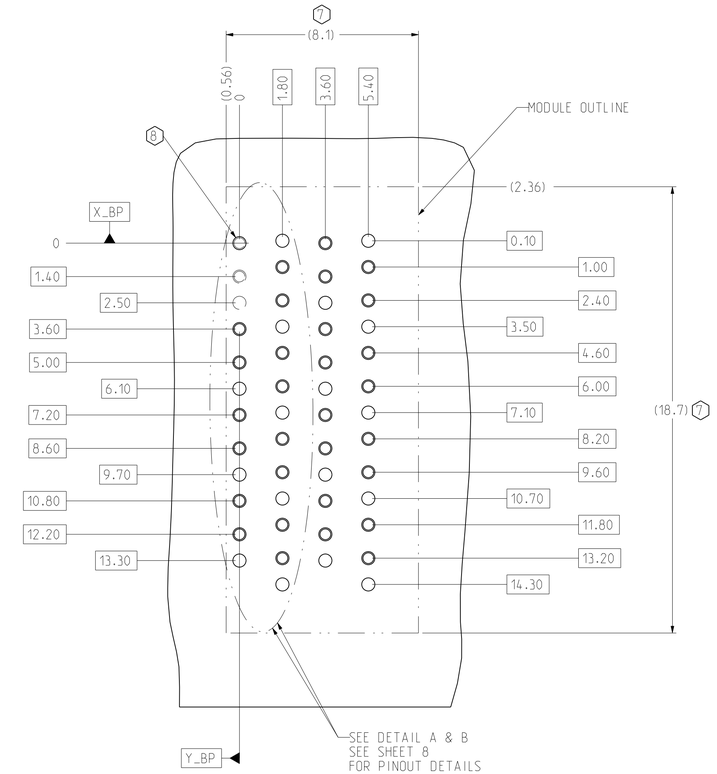

BP HOLE PATTERN
COMPONENT SIDE
SCALE 8/1

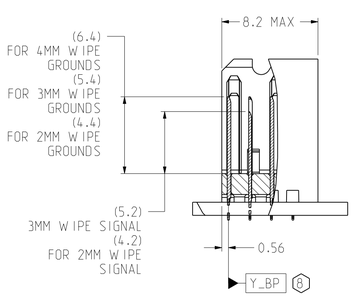

SECTION Z-Z

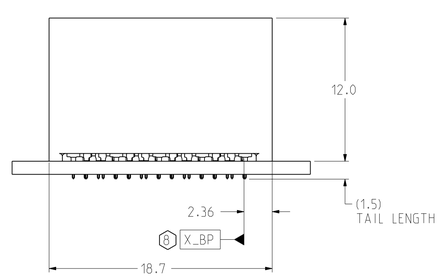

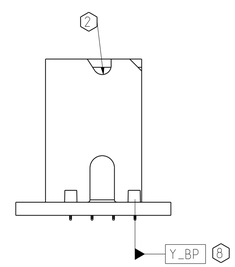

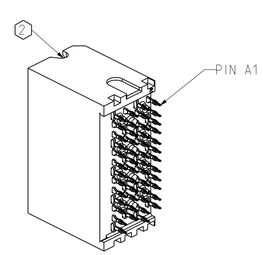

ISOMETRIC VIEW
SCALE 3/1

RIGHT WALL BACKPLANE FOOTPRINT

TOLERANCES	
0.0	±0.25
0.00	±0.13
0.000	± -
ANGLES	± 3°

UNLESS OTHERWISE SPECIFIED DIMENSIONS ARE IN MM. DECIMAL MARKER IS A PERIOD

INTERPRET PER ASME Y14.5M

CODE IDENT 31413

CUSTOMER USE DRAWING

DESIGN 02/18/2010 T.DO
DRAWN 02/18/2010 HCL-RK
CHK 02/18/2010 T.DO
APVD 02/18/2010 T.DO

Amphenol TCS
A Division of Amphenol Corporation
200 Innovative Way, Nashua, NH 03062 603.879.3000

TITLE BACKPLANE MODULES, VERTICAL MALE HEADER
XCede HD, 4 PAIR 4 POSITION

PART NO. SEE PN TREE SHEET 1 | REV N/A
DRAWING NO. C-923-400J-500 | REV D
ASSEM: C923-400J-500 1.2
DRAWING: C923-400J-500 A.7

SIZE D | SCALE 1/1 | SHEET 6 OF 8

ZONE	REV	SCR NUMBER	DESCRIPTION	BY	DATE	APPROVED
			SEE SHEET 1			

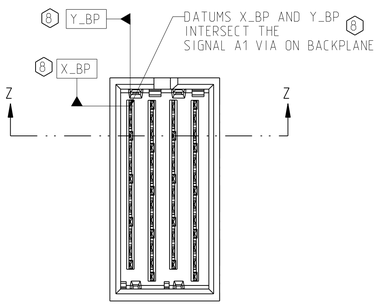

TWO WALL BACKPLANE MODULE DIMENSION

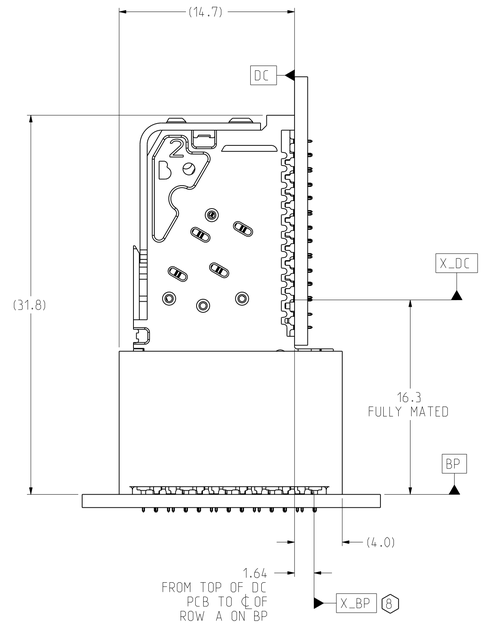

CONNECTOR REFERENCE
SCALE 4/1

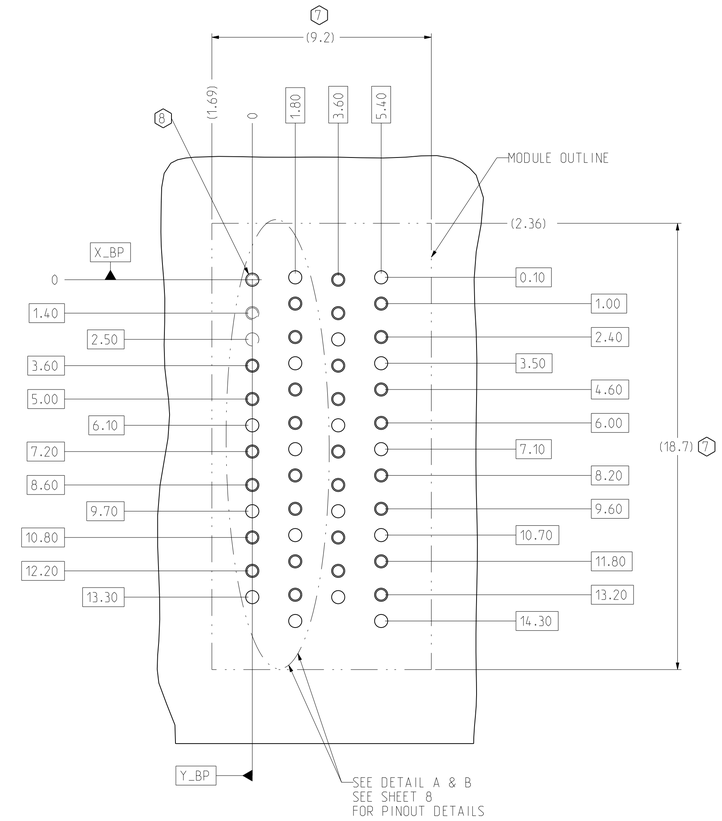

BP HOLE PATTERN
COMPONENT SIDE
SCALE 8/1

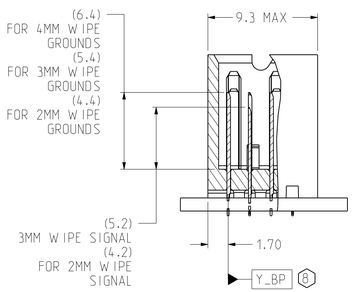

SECTION Z-Z

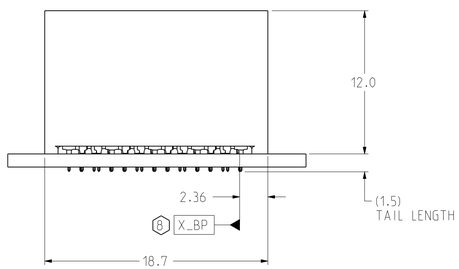

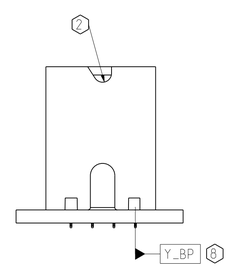

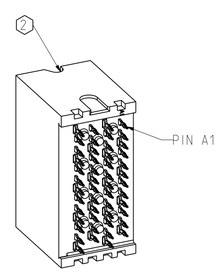

ISOMETRIC VIEW
SCALE 3/1

TWO WALL BACKPLANE FOOTPRINT

TOLERANCES	
0.0	±0.25
0.00	±0.13
0.000	± -
ANGLES	± 3°

UNLESS OTHERWISE SPECIFIED DIMENSIONS ARE IN MM. DECIMAL MARKER IS A PERIOD

INTERPRET PER ASME Y14.5M

CODE IDENT 31413

CUSTOMER USE DRAWING

DESIGN 02/18/2010 T.DO
DRAWN 02/18/2010 HCL-RK
CHK 02/18/2010 T.DO
APVD 02/18/2010 T.DO

Amphenol TCS
A Division of Amphenol Corporation
200 Innovative Way, Nashua, NH 03062 603.879.3000

TITLE BACKPLANE MODULES, VERTICAL MALE HEADER
XCede HD, 4 PAIR 4 POSITION

PART NO. SEE PN TREE SHEET 1 | REV N/A
DRAWING NO. C-923-400J-500 | REV D
ASSEM: C923-400J-500 1.2
DRAWING: C923-400J-500 A.7
SIZE D | SCALE 1/1 | SHEET 7 OF 8

DRW NO. C-923-400J-500 | SH 7 | REV D

ZONE	REV	SCR NUMBER	DESCRIPTION	BY	DATE	APPROVED
			SEE SHEET 1			

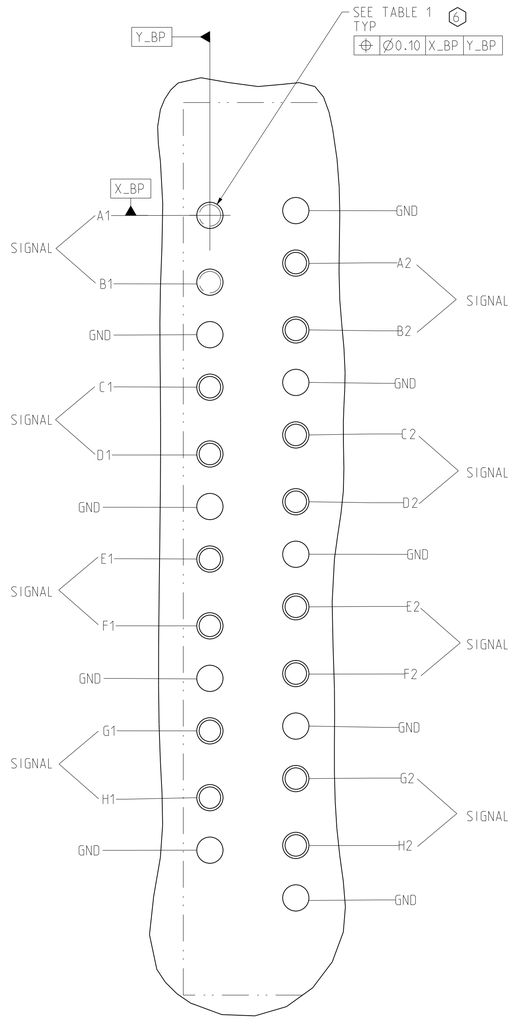

DETAIL A
HSD PINOUTS
SCALE 16/1

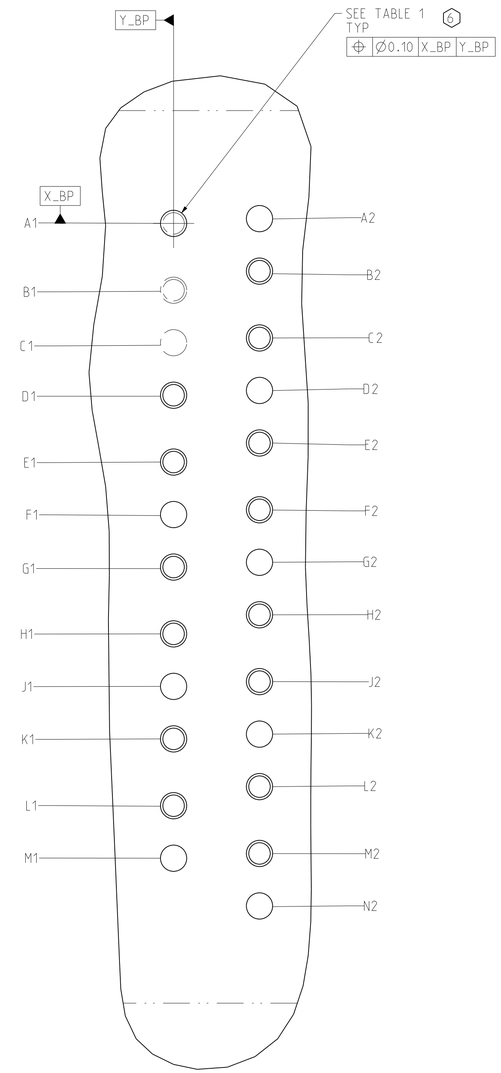

DETAIL B
LC PINOUTS
SCALE 16/1

TABLE 1 6

	COMPLIANT PIN DRILL Ø.0217"	COMPLIANT PIN DRILL Ø.0177"
PTH	Ø0.45±0.05	Ø0.36±0.05
DRILL	Ø0.55 [.0217"]	Ø0.45 [.0177"]
PAD	Ø0.85	Ø0.75

TOLERANCES	
0.0	±0.25
0.00	±0.13
0.000	± -
ANGLES	± 3°

DESIGN 02/18/2010 T.DO
DRAWN 02/18/2010 HCL-RK
CHK 02/18/2010 T.DO
APVD 02/18/2010 T.DO

UNLESS OTHERWISE SPECIFIED DIMENSIONS ARE IN MM. DECIMAL MARKER IS A PERIOD

INTERPRET PER ASME Y14.5M

CODE IDENT 31413

CUSTOMER USE DRAWING

Amphenol TCS
A Division of Amphenol Corporation
200 Innovative Way, Nashua, NH 03062 603.879.3000

TITLE BACKPLANE MODULES, VERTICAL MALE HEADER
XCede HD, 4 PAIR 4 POSITION

PART NO. SEE PN TREE SHEET 1 REV N/A
DRAWING NO. C-923-400J-500 REV D
ASSEM: C923-400J-500 1.2
DRAWING: C923-400J-500 A.7
SIZE D SCALE 1/1 SHEET 8 OF 8

DRW NO. C-923-400J-500 SH 8 REV D