REV.	ECN NO.	DATE	SIGN	DESCRIPTION
B	LEN1160059	2011/03/04	Doreen	Change Dimension View.

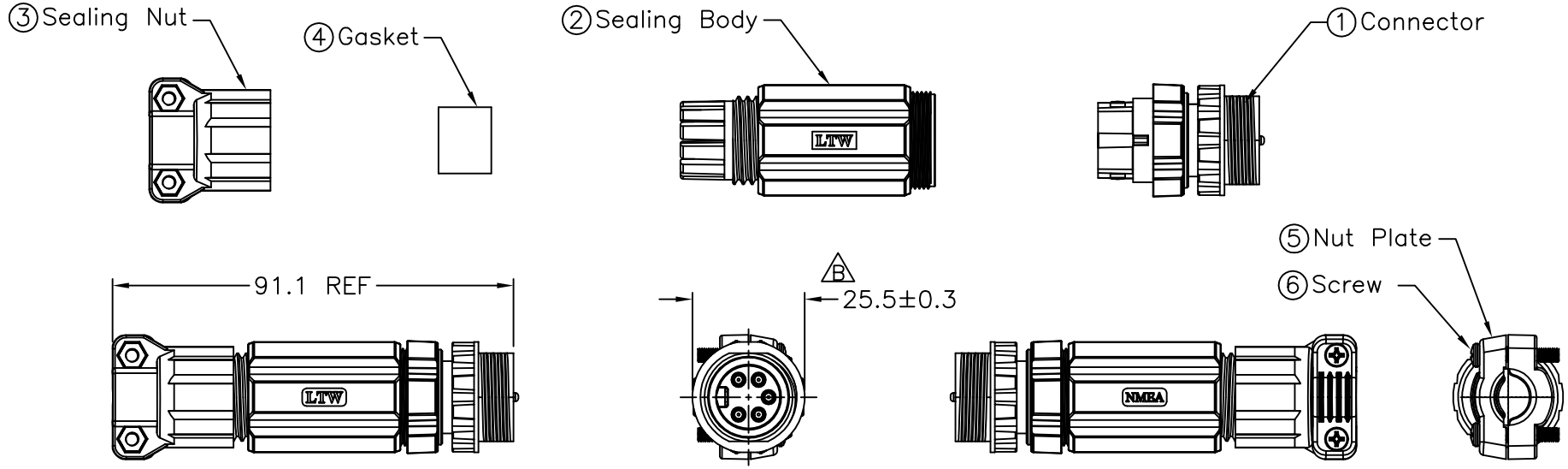

ALTW
DCC. DEPT.
CONFIDENTIAL
2011.06.08
ISSUED

ALTW
CONFIDENTIAL
2011.03.04
R&D DEPT.

Note:
* QC Important Dimension.
* Waterproof Rate : IP67
* Connector: Nylon+GF, Black
* Pin: Copper Alloy,Gold Plated
* O-Ring: Silicone, Gray.
* Holder: Nylon+GF, Black.
* Gasket: Silicone, Black.
* Sealing Nut: Nylon+GF, Black.
* Nut: ZINC,Nickel Plated
* Seals For Cable OD ø8mm~ø12.2mm
* 使用溫度 : -20°C~70°C

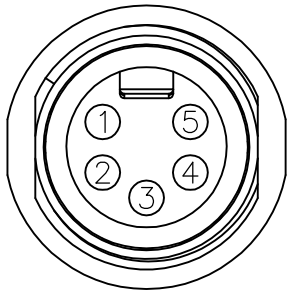

Conn.
Pin Assignments
Front View

Conn.	Name	Pair	Wire Color For User	
5	NET-L	Signal	Blue 藍	(18AWG)
4	NET-H	Signal	White 白	(18AWG)
3	NET-C	Power	Black 黑	(15AWG)
2	NET-S	Power	Red 紅	(15AWG)
1	Shield	Drain	Bare	(18AWG)

Pin Out

B

UNIT:mm	TITLE NMEA2000 Mini-C MALE SCREW-IN ASSEMBLE	Amphenol LTW 安費諾亮泰企業股份有限公司	ITEM NO UMN-05BMMB-SL7001	DRAWN BY Doreen	DATE 2011/03/04
TOLERANCE .X ±0.25 .XX ±0.1 .XXX ±0.05 ANGLES ±1°	SCALE Free / SHEET 1 OF 1		DWG NO UMN-05BMMB-SL7001	CHECKED BY Winnie	DATE 2011/03/04
	REV. B / SIZE A4 / QC :Inspection Item		CUSTOMER ALTW	APPROVED BY Kevin	DATE 2011/03/04

THIS DOCUMENT IS SUBJECT TO CHANGE WITHOUT NOTICE. IT IS CONFIDENTIAL AND A PROPERTY OF Amphenol LTW. DISCLOSURE TO THIRD PARTY HAS TO BE AUTHORIZED BY Amphenol LTW.