ELV. RoHS COMPLIANT

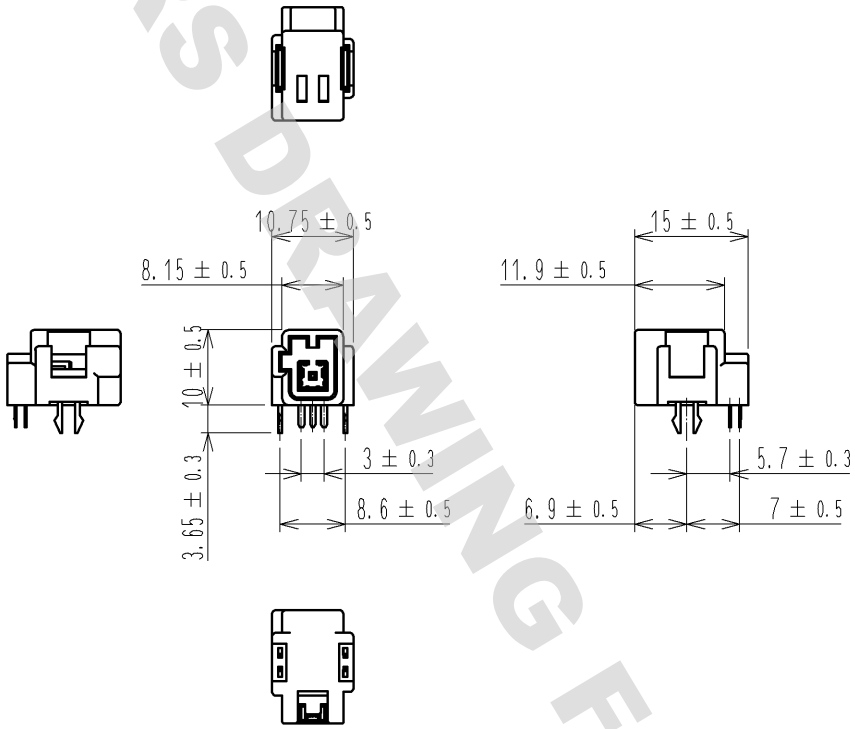


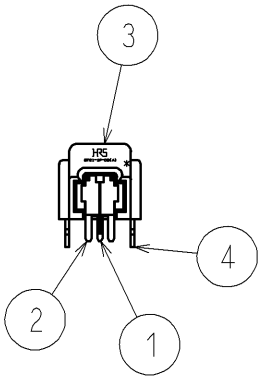


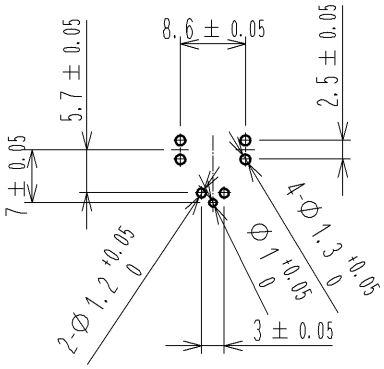


RECOMMENDED PC BOARD HOLE PATTERN

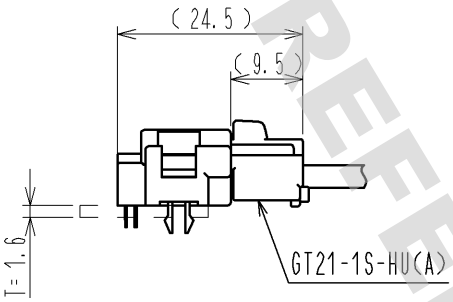


MATED CONNECTORS

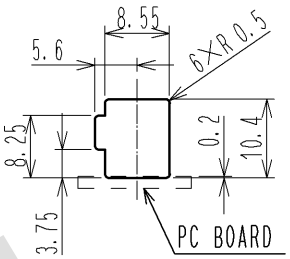


RECOMMENDED PANEL CUT OUT

| NO. | MATERIAL | FINISH . REMARKS | NO. | MATERIAL | FINISH . REMARKS |
|---|---|---|---|---|---|
| 2 | COPPER ALLOY | TIN PLATED | 4 | COPPER ALLOY | TIN PLATED |
| 1 | COPPER ALLOY | TIN PLATED | 3 | PPS | BROWN |

| UNITS mm | SCALE 1 : 1 | COUNT | DESCRIPTION OF REVISIONS | DESIGNED | CHECKED | DATE |
|---|---|---|---|---|---|---|
| | | | | | | |

HIROSE ELECTRIC CO., LTD.

| | | |
|---|---|---|
| APPROVED | : AR. SHIRAI | 11. 10. 31 |
| CHECKED | : MO. OKADA | 11. 10. 31 |
| DESIGNED | : MH. YAMAGUCHI | 11. 10. 31 |
| DRAWN | : MH. YAMAGUCHI | 11. 10. 31 |

| | |
|---|---|
| DRAWING NO. | EDC4-168535-00 |
| PART NO. | GT21-1P-DS(A) |
| CODE NO. | CL771-0020-2-00 |

1/1

FORM HC0011-5-51

HRS DRAWING FOR REFERENCE

DRAWING FOR REFERENCE: This is subject to change without notice
08/11/2012