REV.	ECN NO.	DATE	SIGN	DESCRIPTION
B	LEN-870138	2008/07/24	Yuri	Update Drawing

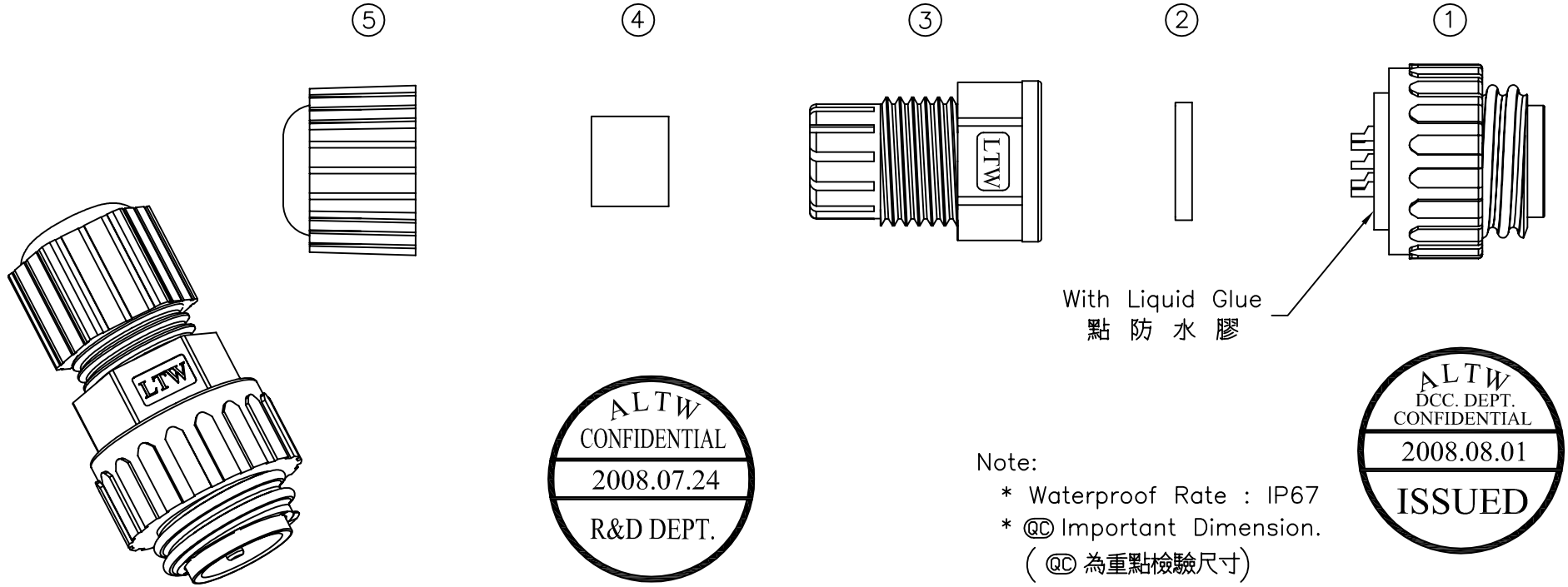

ALTW CONFIDENTIAL
2008.07.24
R&D DEPT.

ALTW DCC. DEPT. CONFIDENTIAL
2008.08.01
ISSUED

Note:

* Waterproof Rate : IP67
* QC Important Dimension.
  (QC 為重點檢驗尺寸)
* Seals for Cable OD:ø5.5mm~ø10.8mm
  (防水墊圈限用線徑 ø5.5mm~ø10.8mm)
* One Set Unassembled in One LTW Sealed Bag
  (每一組未組裝, 放置於一個 LTW 封口袋)
* Housing:Black,Nylon+GF
* Male Pin:Copper Alloy,Gold Plated
* Screw Nut:Black,Nylon+GF
* B Gasket:Black,Silicone
* Clamp Ring:Black,Nylon
* Seals:Black,EPDM
* Sealing Nut:Black,Nylon
* Liquid Glud:Claer

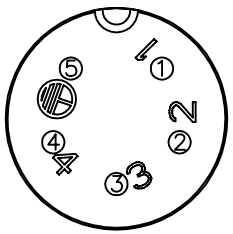

Pin Assignments
Front View 前視圖

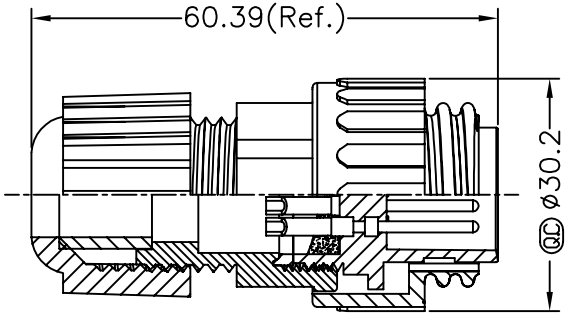

UNIT:mm	TITLE: Power,Assy Screw 5Pin M Conn M Pin	Amphenol LTW 安費諾亮泰企業股份有限公司	ITEM NO: PWE-05BMMA-SL7001	DRAWN BY: Yuri	DATE: 2008/07/24
TOLERANCE .X ±0.25 .XX ±0.1 .XXX ±0.05 ANGLES ±1°	SCALE: Free / SHEET: 1 OF 1		DWG NO: PWE-05BMMA-SL7001	CHECKED BY: Jerry	DATE: 2008/07/24
	REV.: B / SIZE: A4 / QC :Inspection Item		CUSTOMER: ALTW	APPROVED BY: Victor	DATE: 2008/07/24

THIS DOCUMENT IS SUBJECT TO CHANGE WITHOUT NOTICE. IT IS CONFIDENTIAL AND A PROPERTY OF Amphenol LTW. DISCLOSURE TO THIRD PARTY HAS TO BE AUTHORIZED BY Amphenol LTW.