REV.	ECN NO.	DATE	SIGN	DESCRIPTION
B	LEN-750090	2006/11/23	Hu Min	Change Size
C	LEN-910199	2009/01/12	Ivan Lin	Change REV. To ECN Note
D	LEN1190160	2011/08/26	Tony	Modify Dimenison & Note

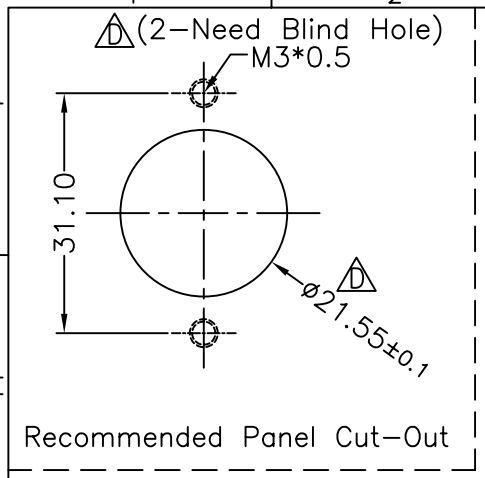

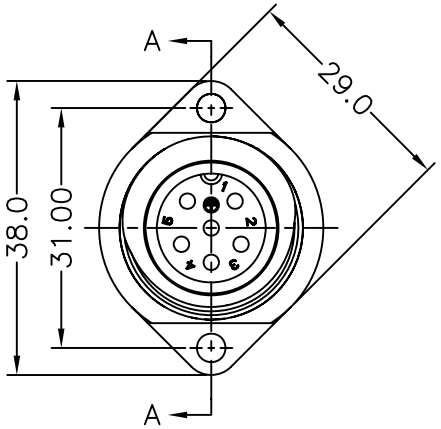

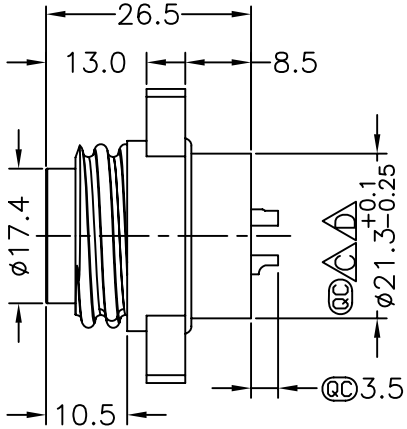

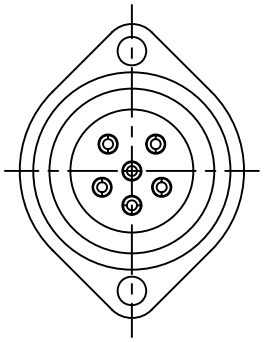

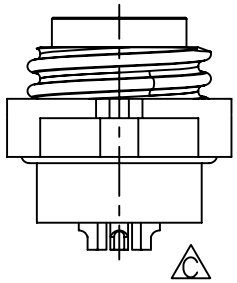

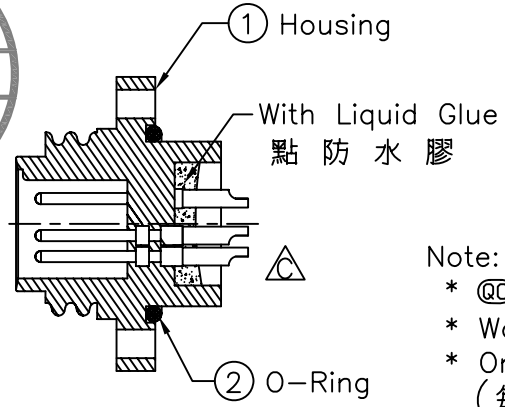

Section A-A

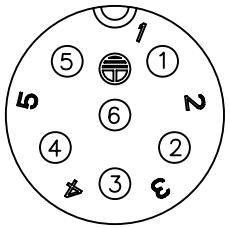

Pin Assignments
Front View前視圖

Note:
* QC Important Dimension.
* Waterproof Rate : IP67
* One Set in One LTW Sealed Bag (每一組裝, 放置於一個 LTW封口袋)
* Housing:Nylon+GF,Black.
* Male pin:Copper Alloy,Gold Plated
D * O-Ring:Silicone 60,Gray.
* Liquid Glue:Clear.

ALTW DCC. DEPT. CONFIDENTIAL 2011.09.19 ISSUED

ALTW CONFIDENTIAL 2011.08.30 R&D DEPT.

UNIT:mm	TITLE C Power Panel Screw 6P M Conn M Pin	**Amphenol LTW** 安費諾亮泰企業股份有限公司	ITEM NO LTWPWE-06PMMS-SC7001	DRAWN BY Tony	DATE 2011/08/26
TOLERANCE .X ±0.25 .XX ±0.1 .XXX ±0.05 ANGLES ±1°	SCALE C Free / SHEET 1 OF 1		DWG NO LTWPWE-06PMMS-SC7001	CHECKED BY Chang	DATE 2011/08/30
	REV. D / SIZE A4 / QC :Inspection Item		CUSTOMER ALTW	APPROVED BY LUKE	DATE 2011/08/30

THIS DOCUMENT IS SUBJECT TO CHANGE WITHOUT NOTICE. IT IS CONFIDENTIAL AND A PROPERTY OF Amphenol LTW. DISCLOSURE TO THIRD PARTY HAS TO BE AUTHORIZED BY Amphenol LTW.

FMWI0702-01-01A2