THIS DRAWING IS UNPUBLISHED. RELEASED FOR PUBLICATION 20
© COPYRIGHT 20 BY - ALL RIGHTS RESERVED.

REVISIONS					
F	LTR	DESCRIPTION	DATE	DWN	APVD
	1	PROPOSED	26SEP2016	DCB	KA

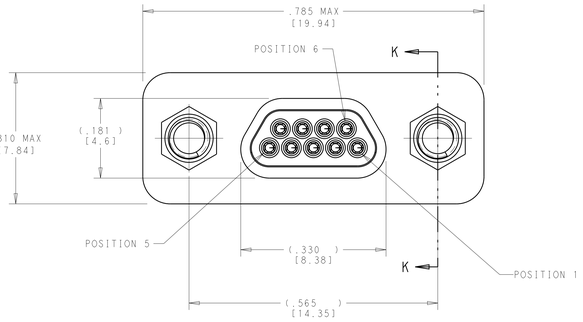

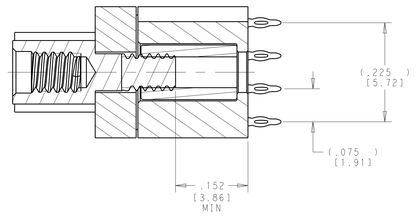

SECTION K-K

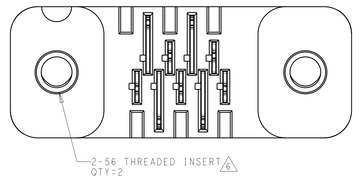

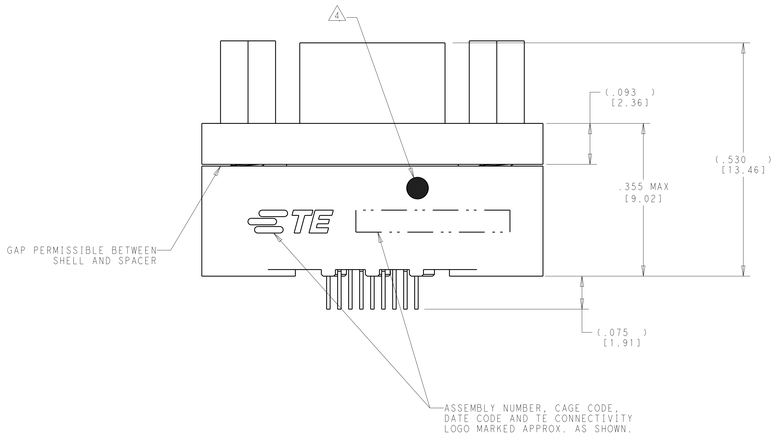

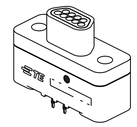

2302729-1 SHOWN
SCALE 3:1

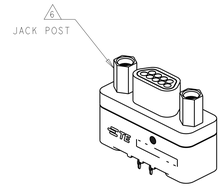

2302729-5 SHOWN
SCALE 3:1

CONTACT TAIL PLATING	MOUNTING STYLE 6	SHELL PLATING	SHELL MATERIAL	MICRODOT PART NO	PART NO
Au 1	THREADED INSERT / JACK POST	BLACK ZINC	ALUMINUM	TBD	3-2302729-0
SnPb 2	THREADED INSERT / JACK POST	BLACK ZINC	ALUMINUM	TBD	2-2302729-9
Au 1	THRU-HOLE	BLACK ZINC	ALUMINUM	TBD	2-2302729-8
SnPb 2	THRU-HOLE	BLACK ZINC	ALUMINUM	TBD	2-2302729-7
Au 1	THREADED INSERT	BLACK ZINC	ALUMINUM	TBD	2-2302729-6
SnPb 2	THREADED INSERT	BLACK ZINC	ALUMINUM	TBD	2-2302729-5
Au 1	THREADED INSERT / JACK POST	PTFE	ALUMINUM	TBD	2-2302729-4
SnPb 2	THREADED INSERT / JACK POST	PTFE	ALUMINUM	TBD	2-2302729-3
Au 1	THRU-HOLE	PTFE	ALUMINUM	TBD	2-2302729-2
SnPb 2	THRU-HOLE	PTFE	ALUMINUM	TBD	2-2302729-1
Au 1	THREADED INSERT	PTFE	ALUMINUM	TBD	2-2302729-0
SnPb 2	THREADED INSERT	PTFE	ALUMINUM	TBD	1-2302729-9
Au 1	THREADED INSERT / JACK POST	PASSIVATED	STAINLESS STEEL	TBD	1-2302729-8
SnPb 2	THREADED INSERT / JACK POST	PASSIVATED	STAINLESS STEEL	TBD	1-2302729-7
Au 1	THRU-HOLE	PASSIVATED	STAINLESS STEEL	TBD	1-2302729-6
SnPb 2	THRU-HOLE	PASSIVATED	STAINLESS STEEL	TBD	1-2302729-5
Au 1	THREADED INSERT	PASSIVATED	STAINLESS STEEL	TBD	1-2302729-4
SnPb 2	THREADED INSERT	PASSIVATED	STAINLESS STEEL	TBD	1-2302729-3
Au 1	THREADED INSERT / JACK POST	CADMIUM	ALUMINUM	TBD	1-2302729-2
SnPb 2	THREADED INSERT / JACK POST	CADMIUM	ALUMINUM	TBD	1-2302729-1
Au 1	THRU-HOLE	CADMIUM	ALUMINUM	TBD	1-2302729-0
SnPb 2	THRU-HOLE	CADMIUM	ALUMINUM	TBD	2302729-9
Au 1	THREADED INSERT	CADMIUM	ALUMINUM	TBD	2302729-8
SnPb 2	THREADED INSERT	CADMIUM	ALUMINUM	TBD	2302729-7
Au 1	THREADED INSERT / JACK POST	NICKEL	ALUMINUM	TBD	2302729-6
SnPb 2	THREADED INSERT / JACK POST	NICKEL	ALUMINUM	TBD	2302729-5
Au 1	THRU-HOLE	NICKEL	ALUMINUM	TBD	2302729-4
SnPb 2	THRU-HOLE	NICKEL	ALUMINUM	TBD	2302729-3
Au 1	THREADED INSERT	NICKEL	ALUMINUM	TBD	2302729-2
SnPb 2	THREADED INSERT	NICKEL	ALUMINUM	TBD	2302729-1

1 MATERIAL:
SHELL: SEE TABLE
CONTACT: COPPER ALLOY
INSULATOR: THERMOPLASTIC; COLOR: BLACK
LEAD ORGANIZER: THERMOPLASTIC; COLOR: BLACK
OPTIONAL HARDWARE: STAINLESS STEEL

2 CONTACT FINISH:
MATING AREA: GOLD 50μ"[1.27μm] Au MIN OVER 30μ"[0.76μm] Ni MIN.
COMPLIANT PIN AREA: 15μ"[0.51μm] MIN BRIGHT SnPb OVER 50μ"[1.27μm] MIN Ni.

3 REFERENCE APPLICATION SPEC 114-163000 FOR RECOMMENDED PCB LAYOUT, PLATED THROUGH HOLE DIAMETER AND PLATING THICKNESS. DATUMS AND BASIC DIMENSIONS ESTABLISHED BY CUSTOMER.

4 POSITION 1 SHALL BE INDICATED BY AN IDENTIFIABLE MARK, LOCATED APPROXIMATELY AS SHOWN ON THE POSITION 1 SIDE OF THE CONNECTOR FLANGE. THIS MARK SHALL BE INCLUDED AS PART OF THE PART MARKING INFORMATION.

5. ALL DIMENSIONS AND REQUIREMENTS ARE PER MIL-DTL-83513/28 (EXCEPT COMPLIANT PINS & PART MARKING).

6 THREADED INSERT AND JACK POST 2-56 UNC 2-B CONFIGURATION OPTIONAL.

7 CONTACT FINISH:
MATING AREA: GOLD 50μ"[1.27μm] Au MIN OVER 30μ"[0.76μm] Ni MIN.
COMPLIANT PIN AREA: 15μ"[0.51μm] MIN Au OVER 50μ"[1.27μm] MIN Ni.

THIS PRINT IS
PRELIMINARY
UNQUALIFIED PRODUCT
CONTACT PRODUCT ENGINEERING
BEFORE USING THIS PRINT

THIS DRAWING IS A CONTROLLED DOCUMENT.

DIMENSIONS: INCH [mm]
TOLERANCES UNLESS OTHERWISE SPECIFIED:
0 PLC ±-
1 PLC ±-
2 PLC ±-
3 PLC ±-
4 PLC ±-
ANGLES ±-
FINISH SEE TABLE
MATERIAL 1

DWN D. BELACK 24JUN2016
CHK A. ANNIS 24JUN2016
APVD K. ANNIS 24JUN2016
PRODUCT SPEC 108-163000
APPLICATION SPEC 114-163000
WEIGHT -
CUSTOMER DRAWING

TE Connectivity

NAME PLUG ASSY, VERTICAL, 2 ROW, 9 POSITION, MICRODOT PRESS-FIT

SIZE	CAGE CODE	DRAWING NO	RESTRICTED TO
A0	-	C-2302729	-

SCALE 8:1 SHEET 1 OF 1 REV 1

4806 (3/13)