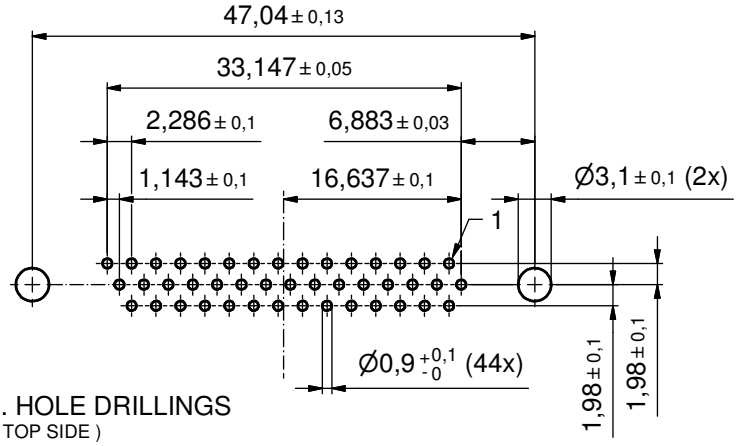

P.C.B. HOLE DRILLINGS
(P.C.B. TOP SIDE)

(5 : 1)

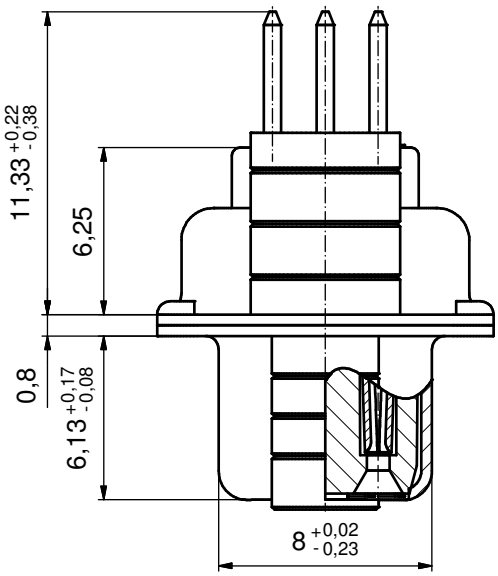

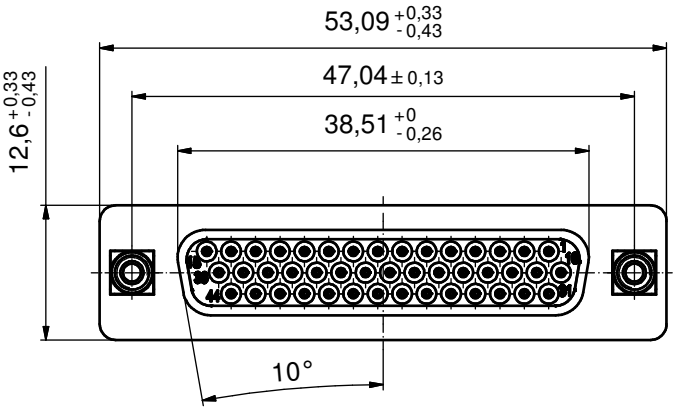

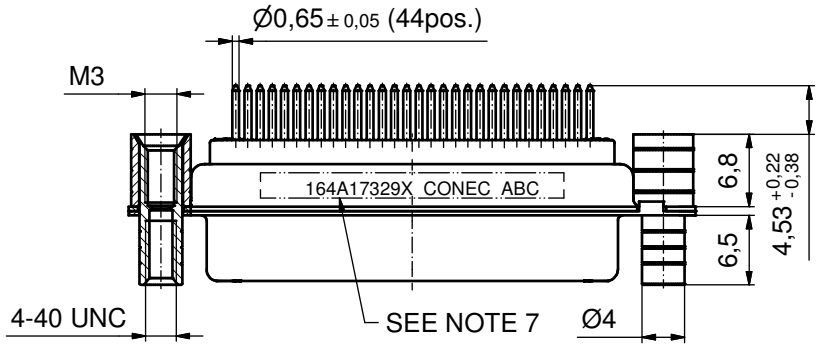

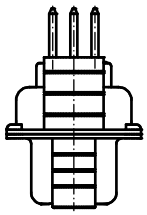

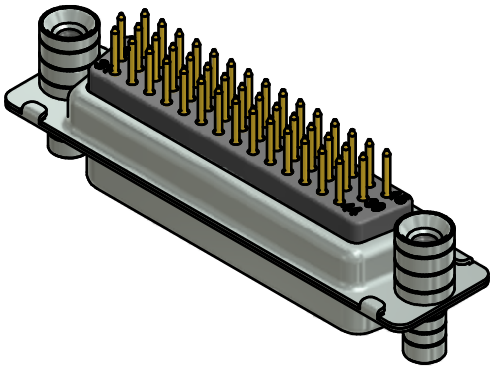

NOTES:

1. METALSHELLS: STEEL; min. 315µin TIN over 40-80µin NICKEL
2. INSULATORS: PBT GF UL 94 V-0; BLACK
3. CONTACTS: COPPER ALLOY
   PLATING: GOLD FLASH over NICKEL
4. THREADED REAR SPACERS / FRONT THREADED LOCKS:
   COPPER ALLOY; min. 200µin TIN over 80µin NICKEL
5. SLEEVES: COPPER ALLOY; min. 200µin TIN over 80µin NICKEL
6. MAXIMUM TORQUE VALUE FOR THREAD: 6 in.LB
7. CONNECTOR IS PART MARKED: 164A17329X CONEC ABC

Directive 2002/95/EC RoHS compliant

THIS DRAWING MAY NOT BE COPIED OR REPRODUCED IN ANY WAY, AND MAY NOT BE PASSED ON TO A THIRD PARTY WITHOUT WRITTEN PERMISSION. OWNERSHIP AND COPYRIGHT OF CONEC GmbH

DO NOT ALTER CAD DRAWING BY HAND

rev.	description	date	name
a	Original		

tolerance — dim. in mm

	date	name
drawn	24.05.11	Henneboel
appd.	26.05.11	Fischer
norm		
d-old		

CONEC®

scale: 2:1 (5:1)
material: SEE NOTES

title:
D-SUB HD FEMALE
44pos. SOLDER PIN STRAIGHT
with threaded rear spacer and front threaded lock

dwg no: 16K1A2830
DIN-A3
sh: 1

part no: 164A17329X