THIS DRAWING IS UNPUBLISHED. RELEASED FOR PUBLICATION 20
© COPYRIGHT 20 - ALL RIGHTS RESERVED.

LOC	DIST
ES	00

REVISIONS

P	LTR	DESCRIPTION	DATE	DWN	APVD
	B	REVISED PER ECR-14-012319	18SPE2014	F.L	J.L
	B1	REVISED PER ECR-15-014919	14OCT2015	T.Z	H.W
	B3	REVISED PER ECR-17-010413	20JUL2017	T.Z	H.W
	C	REVISED PER ECN-21-112090	06AUG2021	AK	SZ

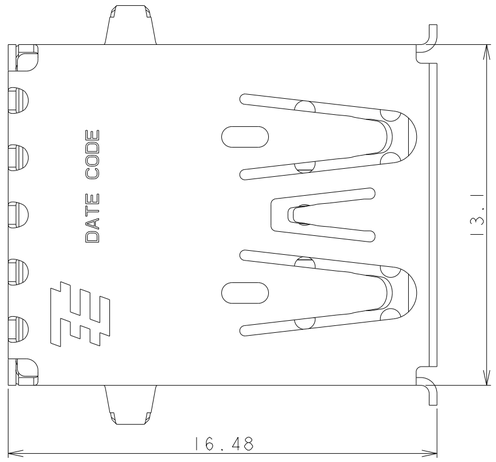

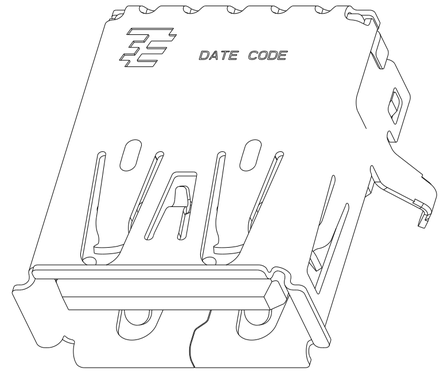

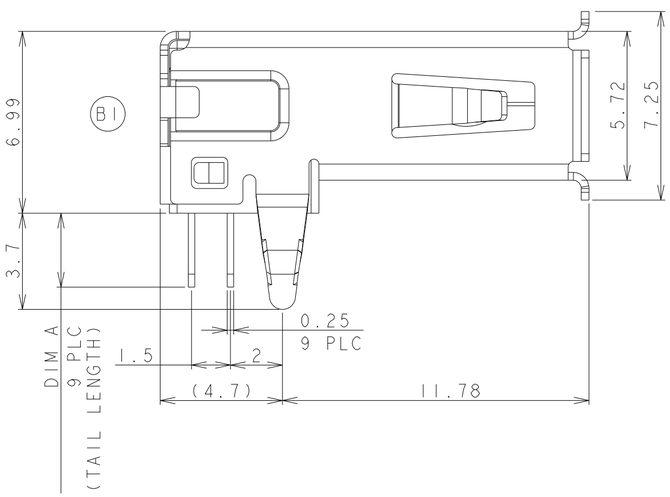

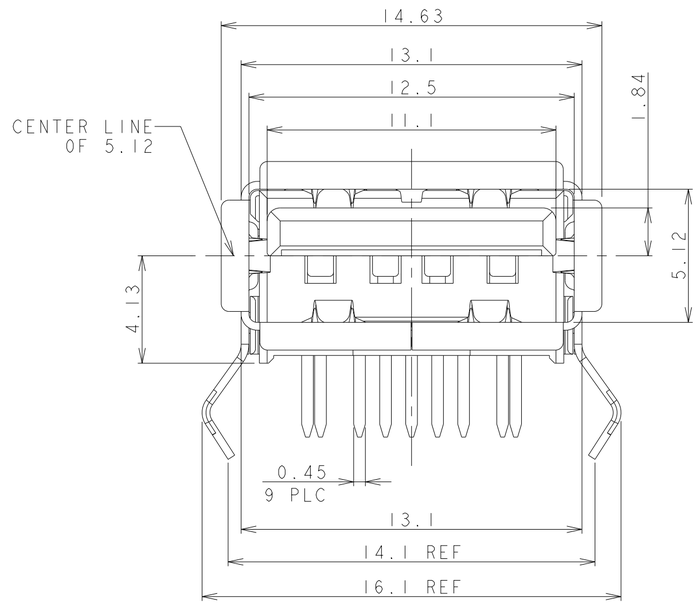

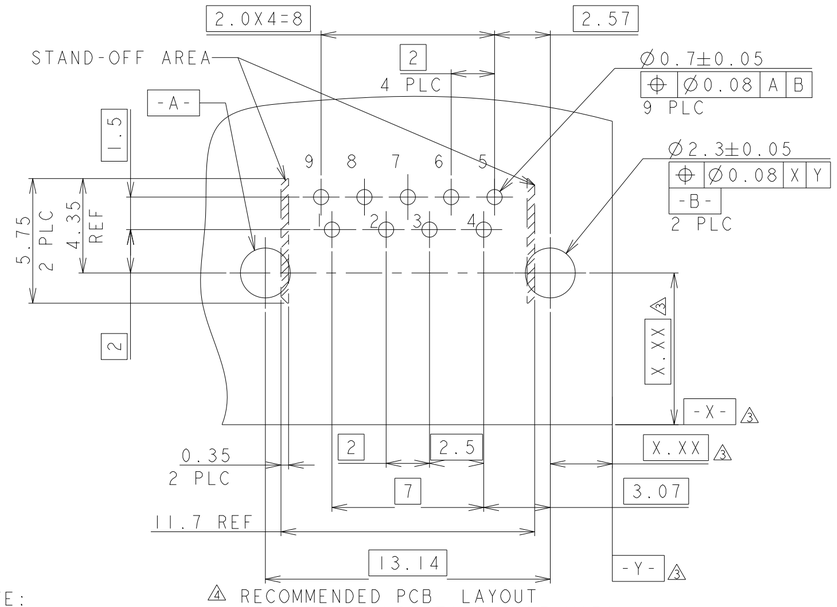

△4 RECOMMENDED PCB LAYOUT
(CONNECTOR MOUNTING SIDE VIEW)

NOTE:
△1 MATERIAL:
(B2) SHELL: STAINLESS STEEL
CONTACT: COPPER ALLOY.
HOUSING: THERMOPLASTIC, BLUE, UL94-HB.
△2 PLATING:
CONTACT: GOLD FLASHED OVER 0.76um MIN Pd-Ni PLATING ON MATING AREA,
2.54um MIN MATTE TIN ON SOLDER TAILS,
1.27um MIN NICKEL UNDER PLATING.
SHELL: TIN OVER NICKEL PLATING
△3 DATUM AND BASIC DIMENSIONS ESTABLISHED BY CUSTOMER
△4 RECOMMENDED PC BOARD THICKNESS OF 1.60.
△5 PLATING:
CONTACT: 0.76um MIN GOLD PLATING ON MATING AREA,
2.54um MIN. MATTE TIN ON SOLDER TAILS,
1.27um MIN NICKEL UNDER PLATING.
SHELL: TIN OVER NICKEL PLATING
△6 THIS PART IS PRELIMINARY.
△7 MATERIAL:
(B2) SHELL: STAINLESS STEEL.
CONTACT: COPPER ALLOY.
HOUSING: THERMOPLASTIC, BLUE, UL94V-0.
8. PIN ASSIGNMENT:

PIN NO.	1	2	3	4	5	6	7	8	9
SIGNAL NAME	VBUS	D-	D+	GND	STDA_SSRX-	STDA_SSRX+	GND_DRAIN	STDA_SSTX-	STDA_SSTX+
REMARK	USB 2.0 CONTACT PIN				USB 3.0 CONTACT PIN				

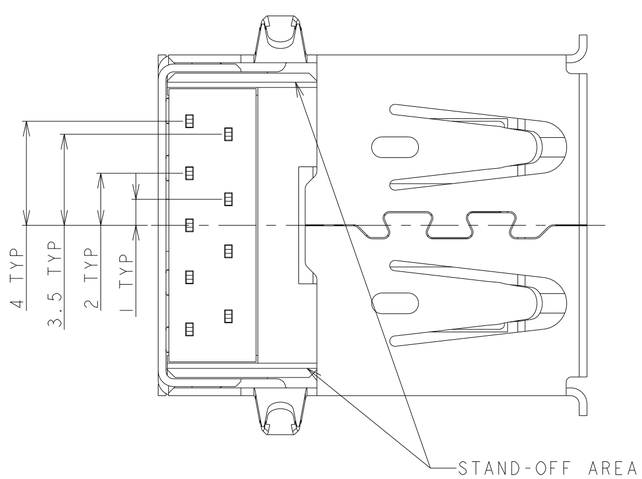

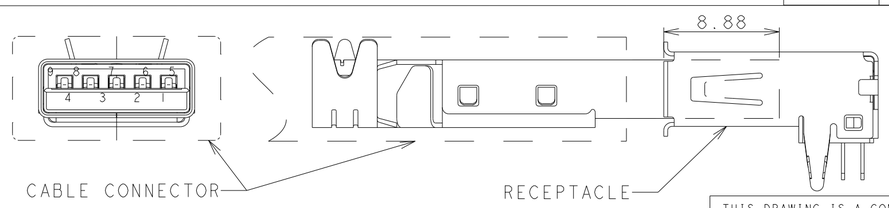

MATING VIEW.

(C)

2.22	△2 OR △5	△1	1932258-5
2.84	△5	△1	1-1932258-2
2.84	△2	△1	1932258-2
2.84	△5	△1	1-1932258-1
2.84	△2 OR △5	△1	1932258-1
DIM A	FINISH	MATERIAL	PART NUMBER

THIS DRAWING IS A CONTROLLED DOCUMENT.

DIMENSIONS: mm

TOLERANCES UNLESS OTHERWISE SPECIFIED:
0 PLC ±0.25
1 PLC ±0.25
2 PLC ±0.25
3 PLC ±-
4 PLC ±-
ANGLES ±3°

MATERIAL △1
FINISH

DWN	FRANICS.LEE	19SEP2010
CHK	MARTIN.LI	19SEP2010
APVD	STEVEN.YAO	19SEP2010

PRODUCT SPEC: 108-115001
APPLICATION SPEC: 501-115002
WEIGHT: -

TE Connectivity

NAME: USB 3.0 TYPE A RECEPTACLE STANDARD TYPE

SIZE	CAGE CODE	DRAWING NO	RESTRICTED TO
A2	00779	C-1932258	-

Customer Drawing | SCALE 2:1 | SHEET 1 OF 1 | REV C

1471-9 (3/11)