REV.	ECN NO.	DATE	SIGN	DESCRIPTION
B	LEN1390067	2013/08/26	Tony_leng	Change 50.7 To 50.6

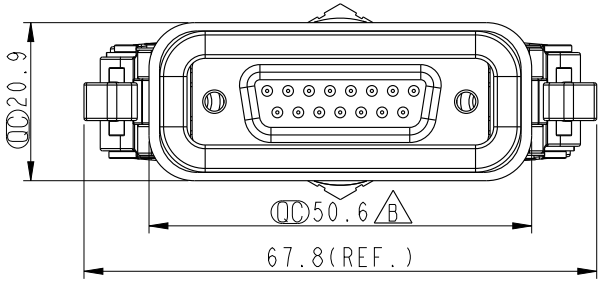

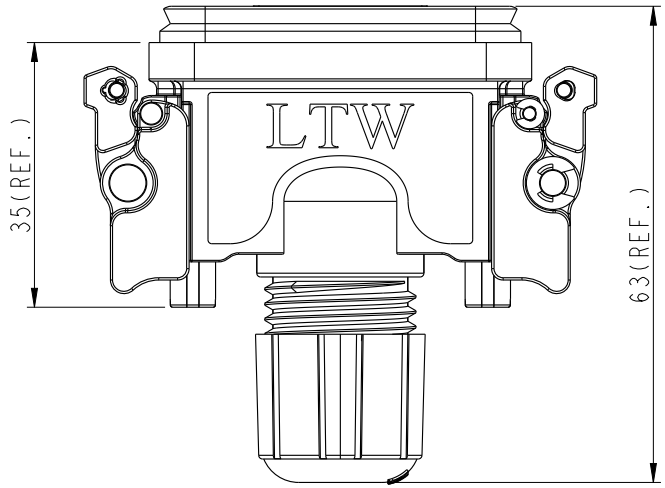

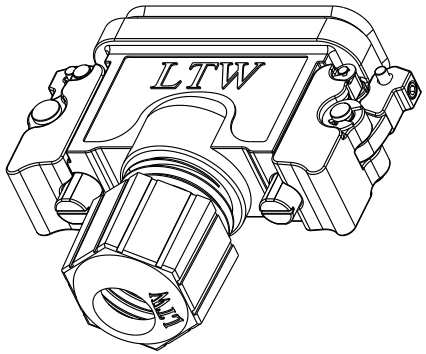

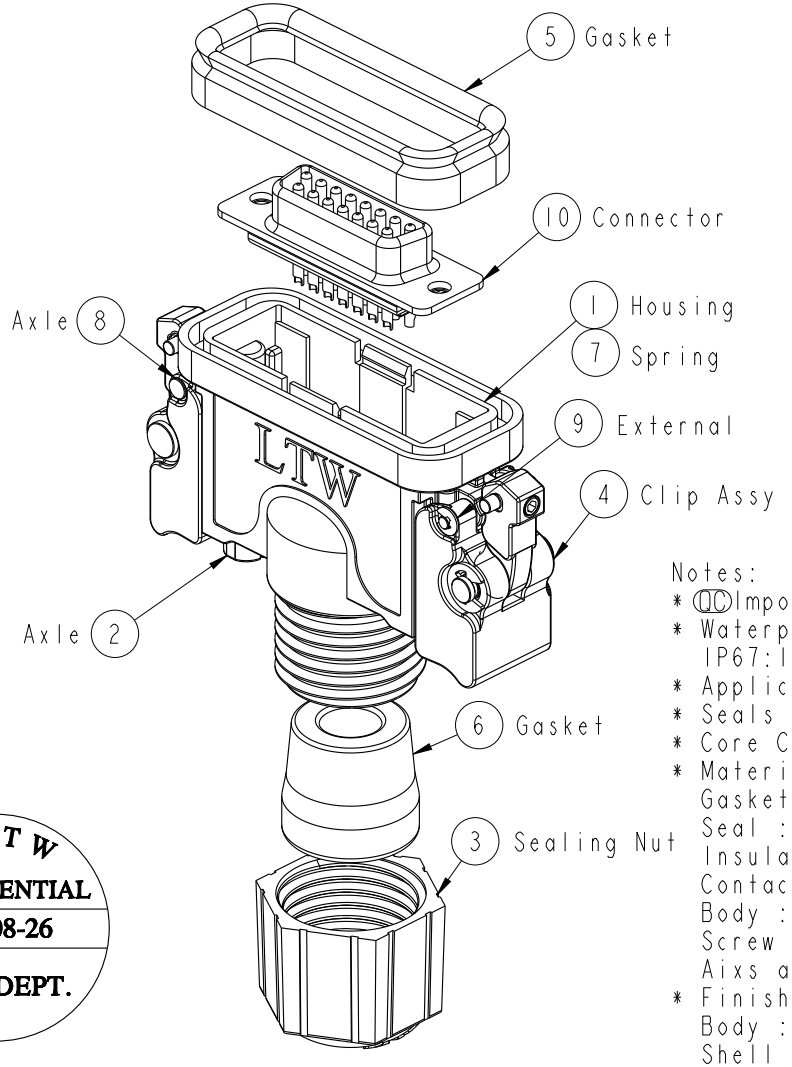

ALTW
DCC. DEPT.
CONFIDENTIAL
2013.09.03
ISSUED

ALTW
CONFIDENTIAL
2013-08-26
R&D DEPT.

Notes:
* QC Important Dimension.
* Waterproof Rate : IP67
  IP67:1M of depth of water 30 Min.
* Applicable Wire Range: 22AWG-26AWG
* Seals for Cable OD:∅6.0mm~∅8.0mm
* Core Color:Black
* Materials:
  Gasket : Silicone,Black
  Seal : Silicone,Black
  Insulator : PBT
  Contact : Copper Alloy
  Body : Zinc
  Screw : Stainless
  Aixs and Buckle : Stainless
* Finishes:
  Body : Nickel Plated
  Shell : Nickel Plated
  Contact : Gold Flash

UNIT:mm

TOLERANCE
.X ±0.25
.XX ±0.1
.XXX ±0.05
ANGLES ±1°

TITLE	D-SUB CONN ASSY QUICK DB15P M CONN M PIN		
SCALE 1:1	SIZE A4	SHEET 1 OF 1	
REV. B	WC-REV. A.2	QC: Inspection item	

Amphenol LTW
安費諾亮泰企業股份有限公司

ITEM NO SDB-15BMMA-QL7001	DRAWN BY SamChang	DATE 2013-08-26
DWG NO SDB-15BMMA-QL7001	CHECKED BY Yulong	DATE 2013-08-26
CUSTOMER ALTW	APPROVED BY Victor	DATE 2013-08-26

FMW10702-01-02A1

THIS DOCUMENT IS SUBJECT TO CHANGE WITHOUT NOTICE. IT IS CONFIDENTIAL AND A PROPERTY OF Amphenol LTW. DISCLOSURE TO THIRD PARTY HAS TO BE AUTHORIZED BY Amphenol LTW.