THIS DRAWING IS UNPUBLISHED. RELEASED FOR PUBLICATION 20
© COPYRIGHT 20 BY - ALL RIGHTS RESERVED.

creo
Creo Parametric 2.0
DO NOT REVISE
EXCEPT BY CAD

REVISIONS

P	LTR	DESCRIPTION	DATE	DWN	APVD
	B3	REV. BY ECO 17-007730	29MAY2017	HC	WLS
	B4	REV. BY ECO 19-005399	14MAY2019	WLS	WLS

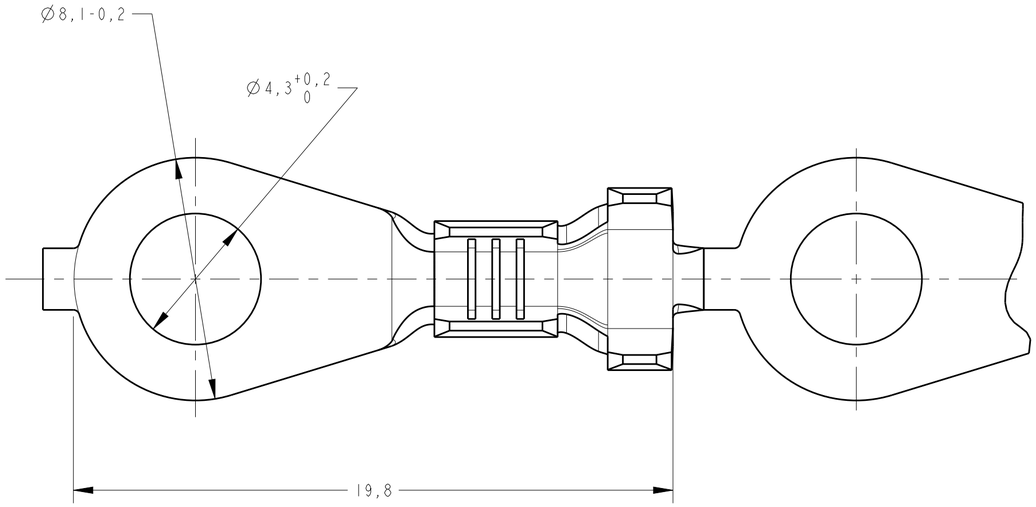

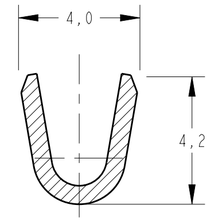

SECTION A-A
SCALE 7:1

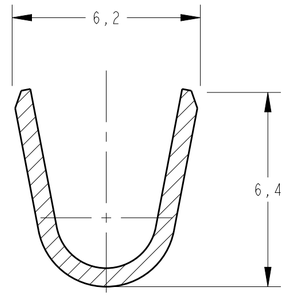

SECTION B-B
SCALE 7:1

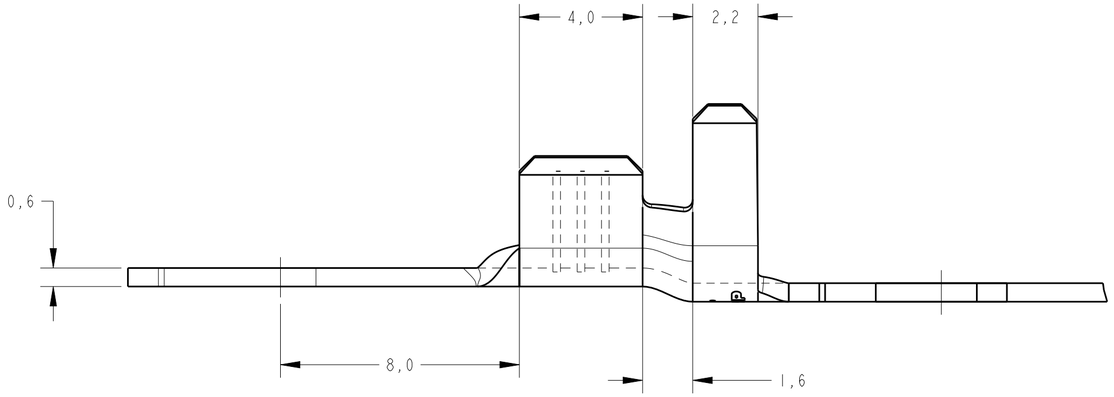

1 - REBOBINAR INTERCALADO COM PAPEL.
- REELING WITH PAPER-INTERLEAVE.

2 - MÉTODO DE EMENDAS FEITO POR PAPEL ENTRE CAMADAS.
- SPLICING METHOD MADE BY THE INTERLEAVING PAPER.

	LOOSE PIECE	FINISH	MATERIAL	PART NUMBER
OBSOLETE	~~PEÇA SOLTA / LOOSE PIECE~~	~~ESTANHADO / TIN PLATED~~	~~MF-2~~	~~1-880642-2~~
OBSOLETE	~~PEÇA SOLTA / LOOSE PIECE~~	~~—~~	~~MF-1~~	~~1-880642-1~~
OBSOLETE		~~ESTANHADO / TIN PLATED~~	~~LATÃO / BRASS~~	~~880642-4~~
	—	—	BRONZE FOSF./PHOSP.BRONZE	880642-3
	—	ESTANHADO / TIN PLATED	LATÃO / BRASS	880642-2
	—	—	LATÃO / BRASS	880642-1

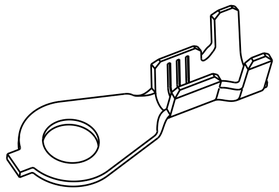

PERSPECTIVE VIEW
SCALE 3:1

INS.DIA.RANGE	2,7-4,0mm
WIRE RANGE	>1,0-2,5mm²

THIS DRAWING IS A CONTROLLED DOCUMENT.

DIMENSIONS: mm

TOLERANCES UNLESS OTHERWISE SPECIFIED:
0 PLC ±-
1 PLC ±0,3
2 PLC ±-
3 PLC ±-
4 PLC ±-
ANGLES ±1°

MATERIAL: SEE TABLE -
FINISH: SEE TABLE -

DWN NCLAPRESA 09DEC2014
CHK FCHRISTIANO 09DEC2014
APVD LWPRADO 09DEC2014
PRODUCT SPEC -
APPLICATION SPEC -
WEIGHT -

TE Connectivity

NAME - RING TONGUE -

SIZE	CAGE CODE	DRAWING NO	RESTRICTED TO
A2	-	C-880642	

CUSTOMER DRAWING | SCALE 4:1 | SHEET 1 OF 1 | REV B4

1471-9 (3/13)