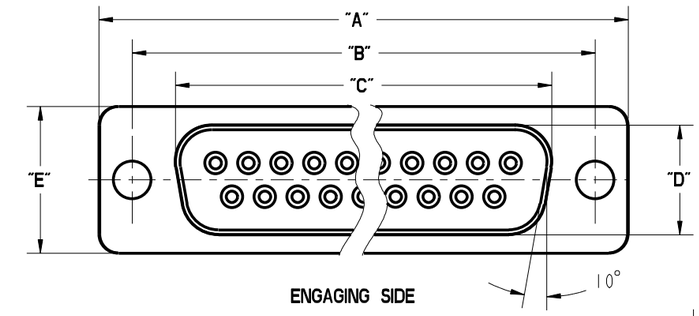


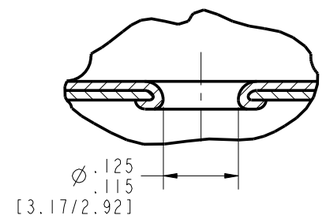


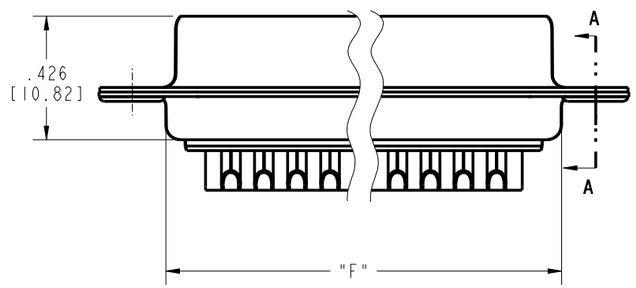


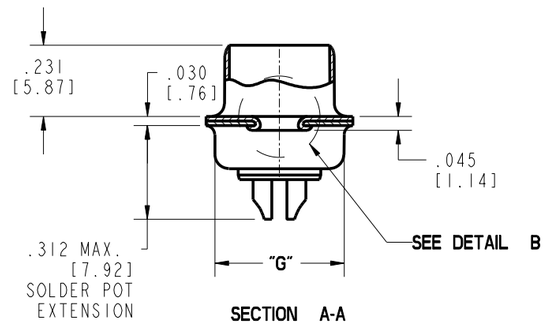


NOTES:

1. SPECIFICATIONS:

ELECTRICAL:
WITHSTANDING VOLTAGE: MINIMUM 1250 V RMS @ SEA LEVEL
INSULATION RESISTANCE: INITIAL 5000 MEGOHMS MAXIMUM,
1000 MEGOHMS MIN. AFTER ENVIRONMENTAL TESTING.
CONTACT RATING: 5 AMPS
CONTACT RESISTANCE: 2.7 MILLIOHMS MAX.

MATERIALS:

INSULATOR: WHITE UL94V-O RATED GLASS FILLED POLYESTER

CONTACT: COPPER ALLOY
CONTACT AREA PLATING: GOLD OVER NICKEL,

CONNECTOR SHELL: STEEL, PLATING ZINC WITH CLEAR CHROMATE.

ENVIRONMENTAL:

OPERATING TEMPERATURE: -65°C TO +125°C

TERMINATION:

SOLDER POTS ACCOMODATE # 20 AWG STRANDED WIRE MAX.

2. DIMENSIONS IN [ ] ARE IN MILLIMETERS.

DRAWING REVISIONS

| REV | DOCUMENT | APP | DATE |
|---|---|---|---|
| A | DO 05-1094 | AKB | 1/7/06 |
| B | ECN 06E468 | | |

| NUMBER OF POSITIONS | SELECTIVE GOLD FLASH PLATING (.120" [3.05] MTG. HOLES | | DIMENSION | | | | | | | FRONT MOUNTING HOLE DIMENSIONS | | REAR MOUNTING HOLE DIMENSIONS | |
|---|---|---|---|---|---|---|---|---|---|---|---|---|---|
| | PART NO. | FACTORY NO. | "A" | "B" | "C" | "D" | "E" | "F" | "G" | "X" | "Y" | "X" | "Y" |
| 9 | DEH-9S | 702 11 09 001 | 1.213 [30.81] | .984 [24.99] | .640 [16.26] | .308 [7.82] | .494 [12.55] | .759 [19.28] | .422 [10.72] | .874 [22.20] | .513 [13.03] | .806 [20.47] | .449 [11.40] |
| 15 | DAH-15S | 702 11 15 001 | 1.541 [39.14] | 1.312 [33.32] | .968 [24.59] | | | 1.083 [27.51] | | 1.202 [30.53] | | 1.134 [28.80] | |
| 25 | DBH-25S | 702 11 25 001 | 2.088 53.04] | 1.852 [47.04] | 1.508 [38.30] | | | 1.629 [41.38] | | 1.743 [44.27] | | 1.674 [42.52] | |
| 37 | DCH-37S | 702 11 37 001 | 2.729 [69.32] | 2.500 [64.50] | 2.156 [54.76] | | | 2.272 [57.71] | | 2.391 [60.73] | | 2.326 [59.08] | |
| 50 | DDH-50S | 702 11 50 001 | 2.635 [66.93] | 2.406 [61.11] | 2.062 [52.37] | .420 [10.67] | .605 [15.37] | 2.178 [55.32] | .534 [13.56] | 2.297 [58.34] | .623 [15.82] | 2.218 [56.34] | .555 [14.10] |

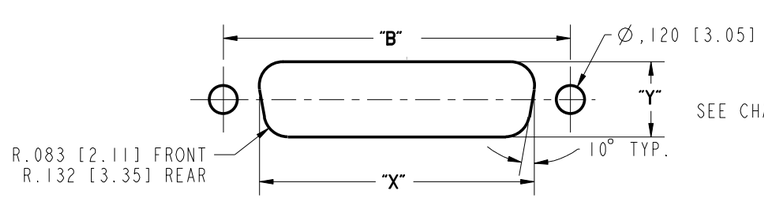


RECOMENDED MTG.HOLE LAYOUT
SEE CHART FOR FRONT AND REAR MTG.DIMENSIONS

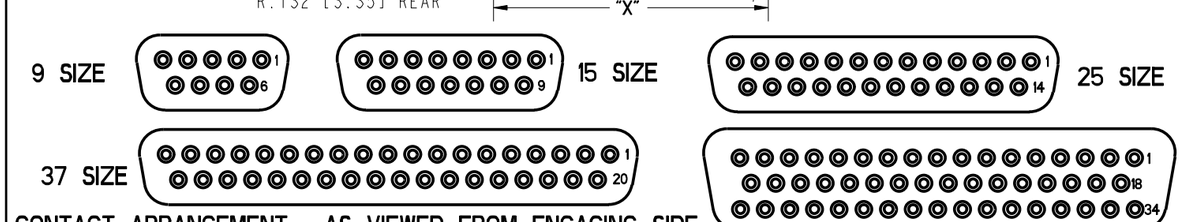


CONTACT ARRANGEMENT - AS VIEWED FROM ENGAGING SIDE

ROHS COMPLIANT

| | | | | |
|---|---|---|---|---|
| UNITS ENGLISH | PRO/E | Cinch | | MODELED BY: V.SKUZA |
| DO NOT SCALE DRAWING | DRAWN BY V.SKUZA | DATE 06/10/05 | TITLE D-SUB SOLDER CUP CONNECTOR SOCKET ASS'Y(.120" MTG HOLES) | 1700 FINLEY RD LOMBARD, IL. 60148 |
| [redacted] | DESIGN ENGINEER A.BALI | 06/10/05 | MATERIAL | CONTROL SPEC NUMBER |
| | DESIGN ENGINEERING MGR. A.SHAH | 07/09/05 | MATERIAL SPEC NUMBER / FINISH | PROJECT NUMBER C14716 |
| THIS DOCUMENT IS THE PROPERTY OF CINCH. NEITHER THIS DOCUMENT NOR ANY OF THE INFORMATION CONTAINED IN IT MAY BE DUPLICATED OR DISCLOSED WITHOUT PRIOR WRITTEN CONSENT OF CINCH. | MFG. ENGINEERING J.OCEGUERA | 07/07/05 | CAD FILE NUMBER DXH-XXS / DRAWING NUMBER | D*H-XXS |
| | QUALITY ASSURANCE A. VAZQUEZ | 07/06/05 | CAGE IDENT NO. 71785 / SIZE B / SCALE 1:1 | SHEET 1 OF 1 |