Alle Rechte vorbehalten/ *All rights reserved*

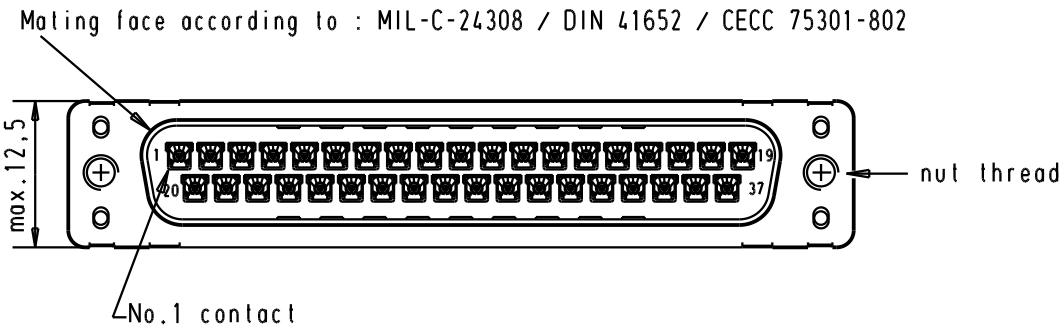

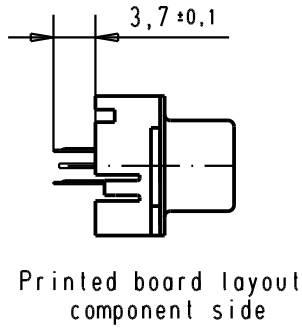

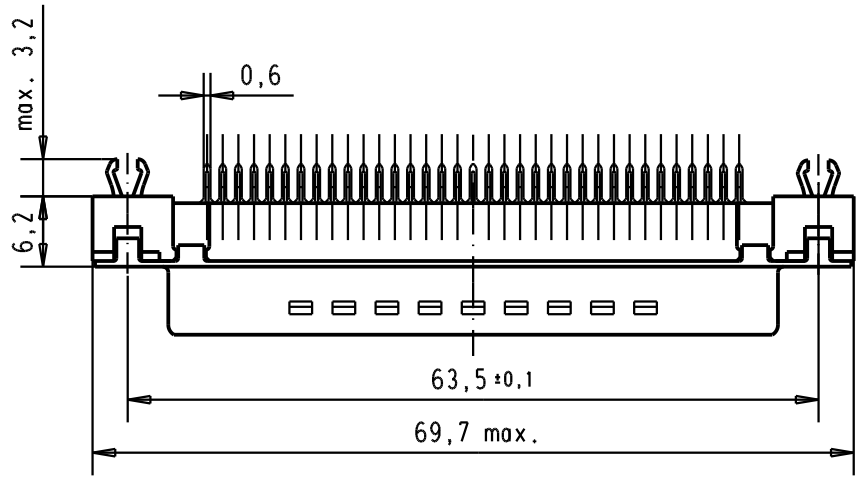

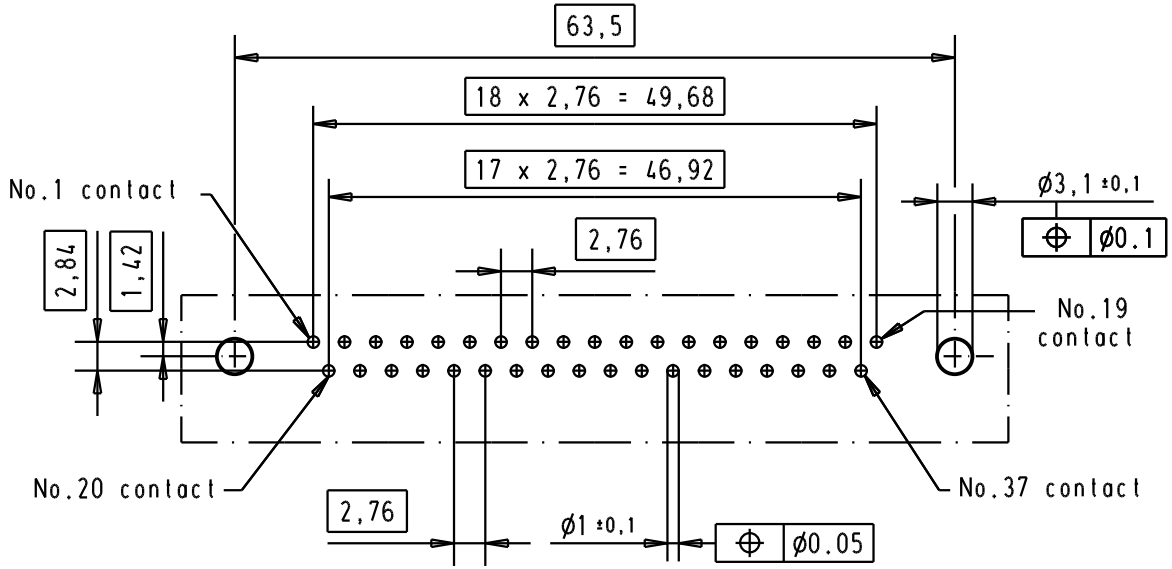

Connector retention and insertion forces on the PCB = 25 / 80 Newtons

Part number	Nut thread	Performance level	Mod.	Dat.	Name
09 65 461 3711	M3	1			
09 65 461 6711	M3	2			
09 65 461 7711	M3	3			
09 65 461 3712	4-40 UNC	1	31892	22/04/04	JH
09 65 461 6712	4-40 UNC	2	31523	11/07/03	TCP
09 65 461 7712	4-40 UNC	3	29723	05/03/02	CV

	Dat.	Name
Detail.	05/03/02	CV
Insp.		
Stand.		

All Dim. in mm
Orig. Size DIN A 4

D-Sub, 37 poles,
male, straight,
with solder pins 3.7,
nuts and grounding board lock

Maßstab/ *Scale* 1.5:1

HARTING EURL
F-95972 Paris

TB 09 65 461 x71x

Sub.

Blatt/ *Page* 1