ADF7xxxMB4z Evaluation Motherboard

EVAL-ADF7xxxMB4z

Features

Suitable for all new generation ADF7xxxDBxz Daughter Boards available from ADI
Programmable 64pin Renesas RL78
Ethernet Capability
SD card slot
128 x 64 Dot Matrix Screen
Touch Screen Capability
USB communications
DUAL UART Communications
Onboard Debugger
Expansion Header to all uC GPIOs
8 x General Purpose LEDs
Multiple powering options

General Description

The EVAL-ADF7xxxMB4z Evaluation Board is the Motherboard for all new generation ADF7xxxDBxz Daughter boards. The Daughter Board plugs directly into the motherboard to provide a full ADF7xxx development kit for a wide range of applications depending on the daughterboard selection.

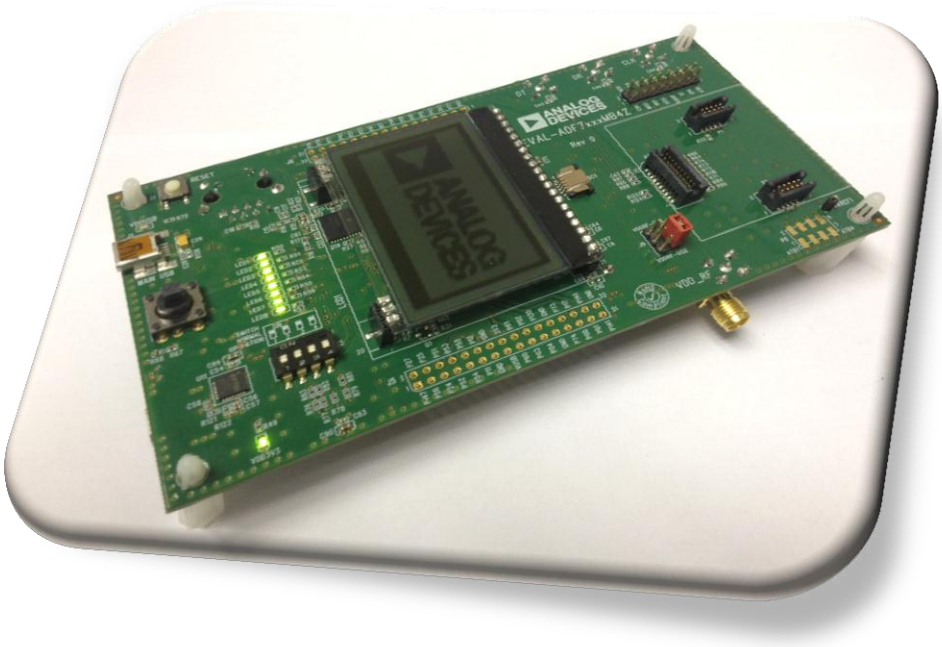

TABLE OF CONTENTS

Features 1
General Description 1
Revision History 3
Hardware Overview 3
Power Supply 3
Getting Started 3
Installing Software 3
ADF7xxxMB4z Evaluation Hardware 5
USB PORTS 5
Main USB 5
Secondary USB 5
Reset 5
Programming and TK interface 6
ADF7023 Daughter Card Connection 6
ADF7xxx External Interfaces 6
SMA Connectors 6
ADF7xxx Connections Header 7
ATB Header 7
ADF7xxx Powering Options 8
SD Micro Card 9
Ethernet Port 9
Dot Matrix LCD 9
Touch Screen Controller 9
Low Power Options 10
Schematics 11
Bill of Materials 11
(BOM) 11

Revision History

Date: June 17th 2014
Revision: Rev.1.0

Hardware Overview

The Development Platform consists of the Eval-ADFxxxMB4Z mother board to which an appropriate daughter card may be connected. The available daughter cards are given in . Schematics for the motherboard are given in the *Schematics* section of this document.

Power Supply

There are two options to power the ADFxxxMB4Z mother board.

1. USB powered
2. Battery powered

The mother board may be powered via the USB cable supplied. The 5V from the USB cable is regulated down to 3.3 V for the various chips on the board such as the R5F100LLA microcontroller and the ADF7023 transceiver. Alternatively a battery may be used to power the microcontroller and transceiver. A 3.6V battery is shipped with the boards.

Getting Started

Installing Software

The "***ADF7xxxMB4z Evaluation Suite***" software and documentation can be installed from the CD supplied with the board, or the Analog Devices Website.

Before connecting the ADF7xxxMB4z to the PC via the USB connector, it is mandatory to install the USB drivers needed for proper communication between the ADF7xxxMB4z and applicable PC tools.

The drivers are bundled and installed together with a HyperTerminal program, "TeraTerm", and IAR Embedded Workbench for the Renesas RL78 microcontroller.

Installation Procedure

1. Run "**ADF7xxxMB4z_Evaluation_Suite_Install_rXpX.exe**" to install the evaluation software for the ADF7xxxMB4z. The install will create the relevant shortcuts on the start menu for easy access to the software and documentation.
2. The **install software will** initially load with the following welcome Figure 1. Click "Next"

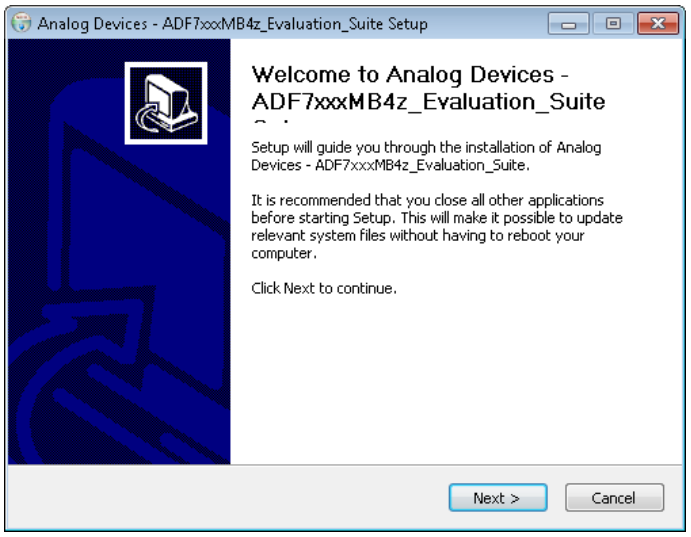

Figure 1

3. Once components to be installed are selected as in Figure 2 click “Install”.
   Install components:
   a. Install ADF7xxxMB*4z* USB Drivers
   b. Install HyperTerminal Program “TeraTerm”
   c. Install IAR RL78 Embedded Workbench

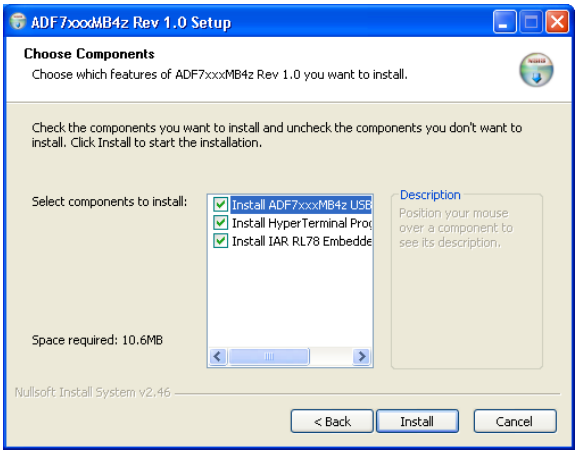

Figure 2

4. If “***Install ADF7xxxMB4z USB Drivers***” component is selected the screen in (Figure 3) will appear. Click “Next” to install the USB Drivers. Once the Drivers are installed click “Finish” (Figure 4).

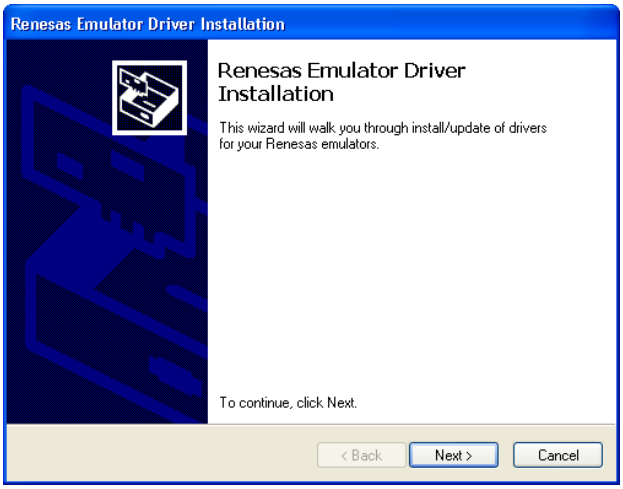

Figure 3

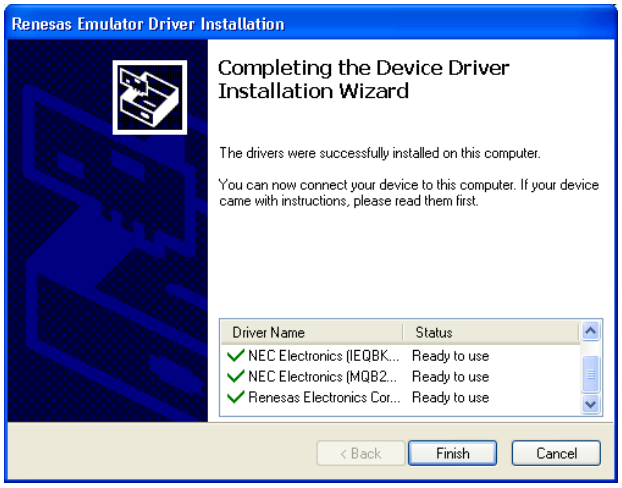

Figure 4

5. If “Install HyperTerminal Program (TeraTerm)” component is selected, a TeraTerm software user License agreement will appear as in. If you agree to the terms of the license, click “*I Agree*”. (Figure 5)

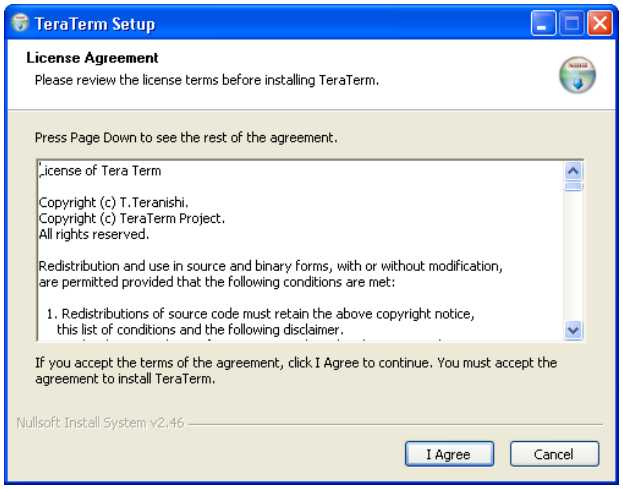

Figure 5

ADF7xxxMB4z Evaluation Hardware

This section gives a description of all hardware sections on the ADF7xxxMB4z motherboard. The board is designed for evaluating the ADF7023 transceiver along with allowing the user to do their own code development on the on-board Renesas RL78.

This section will describe in detail

- USB/Communication Ports
- Reset Button
- Programming and TK debugger interface
- ADF7023 Daughter Card Connection
- ADF7023 external Interfaces
- ADF7023 Powering options
- SD Micro Card
- Ethernet Port
- Dot Matrix LCD
- Touch Screen Controller

USB PORTS

The ADF7xxxMB4z has 2 USB connections on board.

Main USB

The USB connection on the top side of the board is the main USB/Communication port connection. (Figure 6) This port

- Provides the main COM Port for the HyperTerminal program.
- Is used for uploading the .hex code to the uC.
- Is used as the TK debugger when debugging user code in IAR
- Provides Power to the PCB

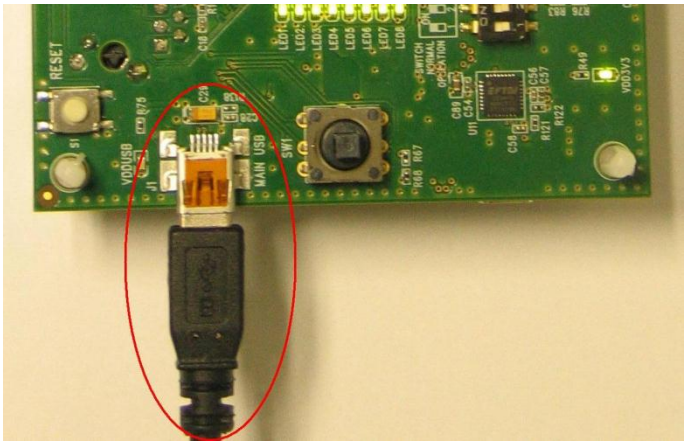

Figure 6

Secondary USB

The secondary USB connection is on the underside of the board (Figure 7). While the uC is in debug mode, the Com Port interface cannot be used in by the main USB port and therefore the only option is to use a second Com Port while debugging serial communications.

This port does NOT power the Motherboard however and so requires a second USB lead to go from it to the PC. This USB port creates a virtual Com Port with an FTDI FT232 chip.

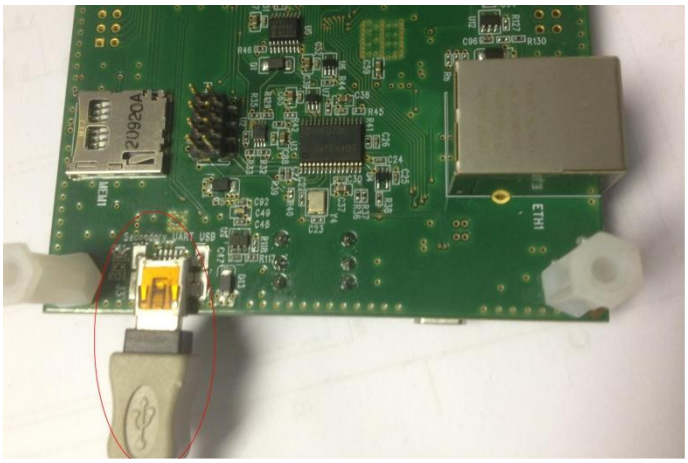

Figure 7

Reset

The reset switch on the board provides a hardware reset of the on-board Renesas uC (Figure 8). The code on the uC will be reset and start again from the beginning once the Reset switch is released.

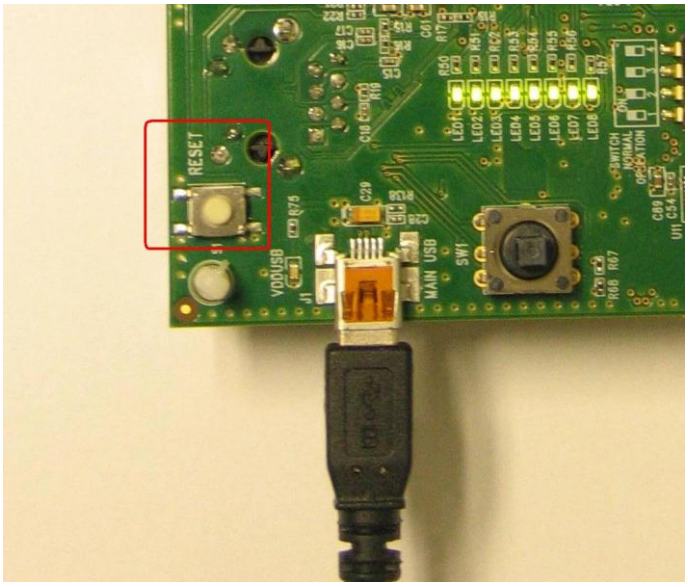

Figure 8

Programming and TK interface

The TK interface can be used in IAR to provide on-board debug capabilities, avoiding the need for a JTAG debugger. To put the device board into debug mode, ensure dipswitch 1 is in the ON position and that all the others are OFF, as per (Figure 9)

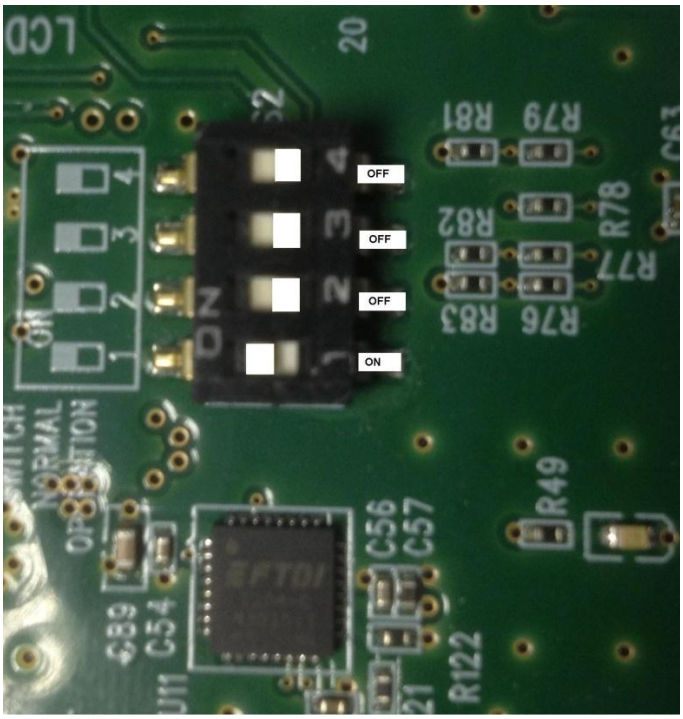

Figure 9 (Debug Mode Setup)

ADF7023 Daughter Card Connection

All of the new generation ADF7xxx daughter cards plug into the ADF7xxxMB4z Motherboard. The card plugs into the headers highlighted in (Figure 10). Ensure the Motherboard is powered down before connecting the daughter board to the Motherboard. Care must be taken when connecting and disconnecting the two boards to avoid damaging the headers on the each of the boards.

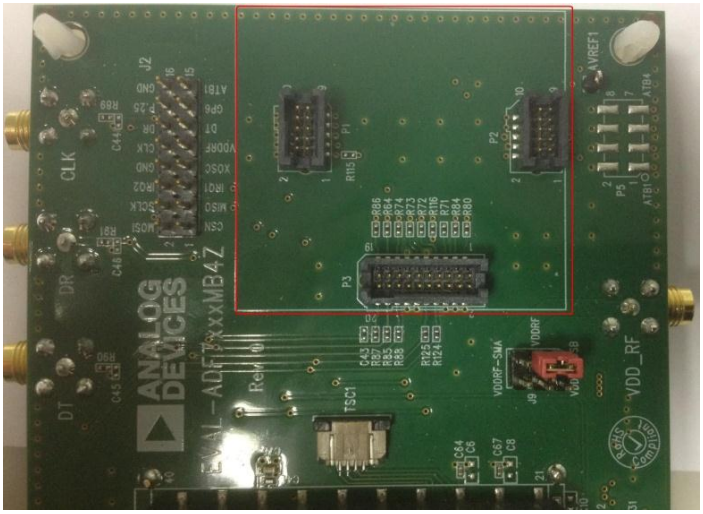

Figure 10 (ADF7xxx Daughter Board Headers)

ADF7xxx External Interfaces

SMA Connectors

The ADF7xxxMB4z has 3 SMA connectors available for operating the transceiver in SPORT mode.

- CLK SMA – This is the Clock connection used for clocking in and out the SPORT Mode data to and from the ADF7xxx.
- DR SMA – This is the pin where the Received data appears in SPORT Mode.
- DT SMA – This is the pin where the data to be transmitted is passed to while in SPORT Mode.

CLK, DR and DT are labelled in (Figure 11).

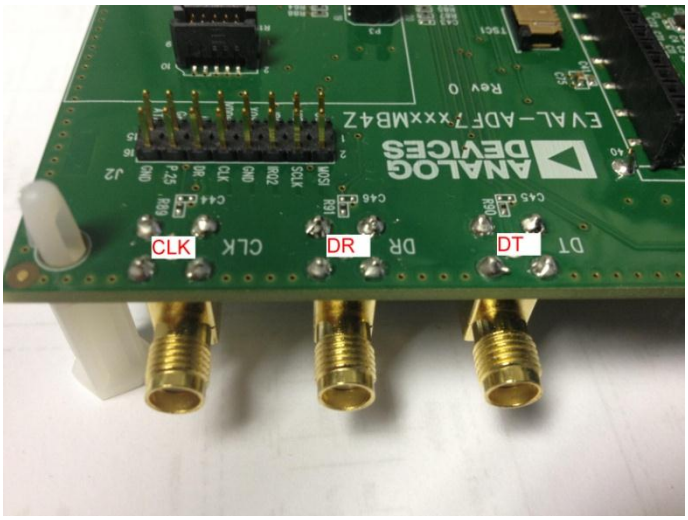

Figure 11 (Sport Mode SMA Headers)

ADF7xxx Connections Header

All of the interface connections on the ADF7xxx are available on header J2. This provides an external interface to the ADF7xxx where connections can be made to an external uC or alternative testing hardware.

The connections, in pin order are as follows:

1. CSN
2. MOSI
3. MISO
4. SCLK
5. IRQ1
6. IRQ2
7. XOSC
8. GND
9. VDDRF
10. CLK
11. DT
12. DR
13. GP6
14. P.25
15. ATB1
16. GND

This header is shown in (Figure 12).

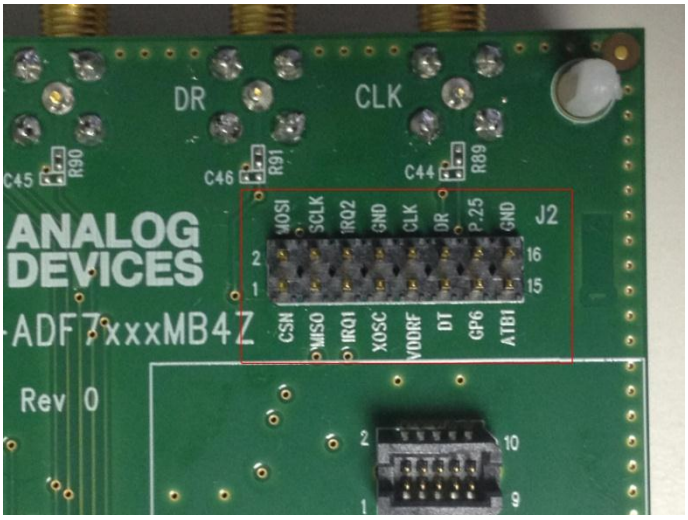

Figure 12 (ADF7xxx Connections Header)

ATB Header

All of the ATB pins on the ADF7xxx come out to a single interface header. This header is not populated on the board.

The Connections, in pin order, are as follows:

1. ATB1
2. GND
3. ATB2
4. GND
5. ATB3
6. GND
7. ATB4
8. GND

This header is shown in (Figure 13).

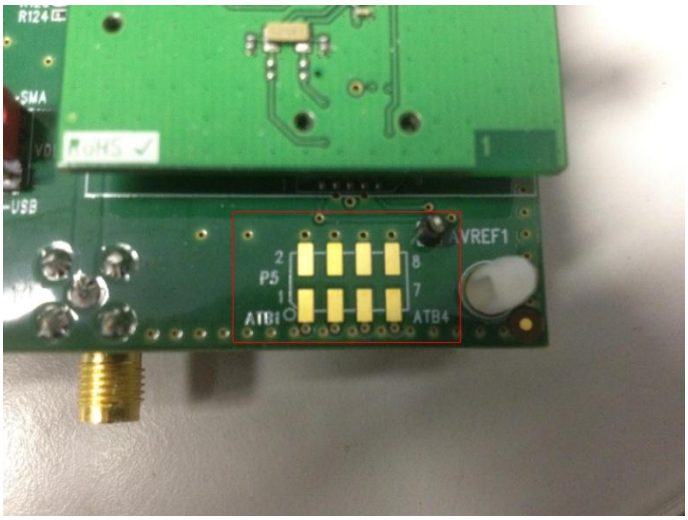

Figure 13 (ATB Connections Header)

ADF7xxx Powering Options

The ADF7xxx Daughter board has 4 different powering options.

It can be powered from the main USB, a 3.6V battery, SMA connector, or directly from Header J9.

Powering the ADF7xxx from the USB

The default method is to power the board from the main USB. For this option ensure the jumper is in position 1 (Figure 14)

Figure 14 (Default Jumper configuration)

Powering the ADF7xxx from the Battery

To power the ADF7xxx and all other components on the ADF7xxxMB4z ensure the 3.6V battery is inserted and that the jumper is in the default position as in (Figure 14).

Powering the ADF7xxx from the SMA connector

Ensure the VDD_RF SMA Power lead is connected to the board and that the Jumper on header J9 is in the correct position as in (Figure 15).

WARNING: The SMA connection powers the ADF7xxx directly and is not regulated. Please ensure that the MAX Power ratings on the ADF7xxx Datasheet are abided by. If these Max Ratings are not adhered to the ADF7xxx daughter card may be permanently damaged as a result. Note also that the center pin of the SMA is the positive and the shielding is ground. Care must be taken to ensure reverse polarity doses not occur as there is no protection circuitry in place for such an event.

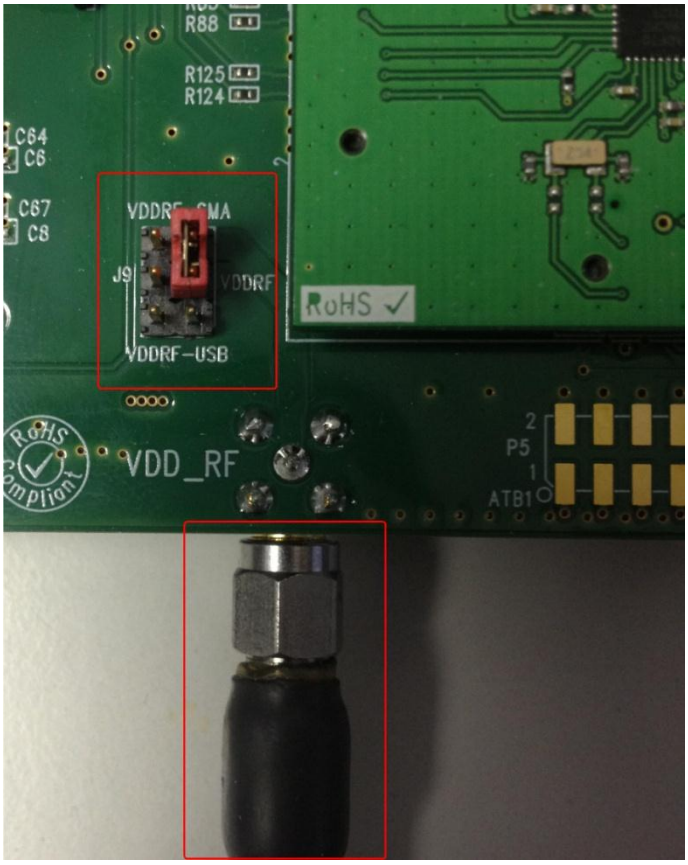

Figure 15 (Powering externally from an SMA Cable)

Powering the ADF7023 directly from Header J9

The ADF7xxx can be powered directly from the Header J9. This can be achieved by connecting placing a connector directly on the VDDRF pin and ground. Refer to Figure 60 for connection orientation.

Figure 16 (Powering the ADF7023 Directly from Header J9)

WARNING: Direct connection to Header J9 powers the ADF7xxxDB directly and is not regulated. Please ensure that the MAX Power ratings on the ADF7xxx Datasheet are abided by and that care is taken to ensure correct polarity as indicated in (Figure 16). If these Max Ratings are not adhered to or polarity is reversed, the ADF7xxx daughter card may be permanently damaged as a result.

SD Micro Card

The micro SD card slot is situated on the underside of the ADF7xxxMB4z. This card can be used to provide extra memory for larger applications. The SD card slot is connected directly to the SPI lines of the on-board uC. Please refer to the *Schematics* section of the document for more information on the connection details. (Figure 17) shows the location of the micro SD card slot on the ADF7xxxMB4z motherboard.

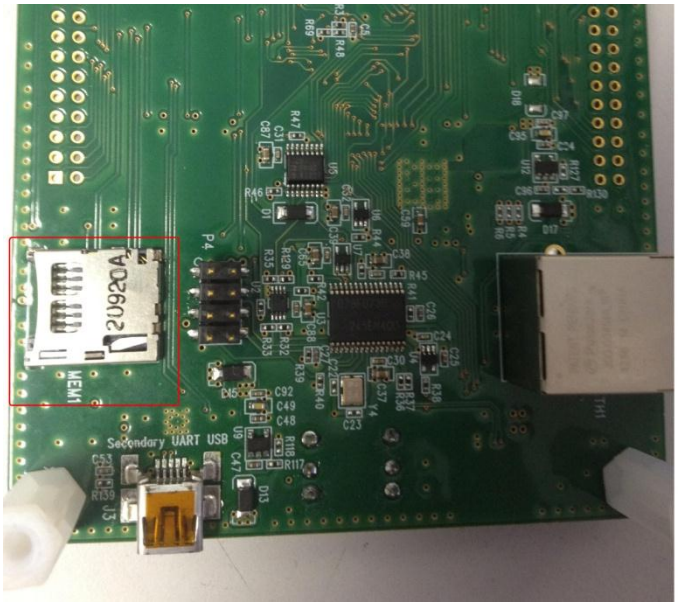

Figure 17

Ethernet Port

The Ethernet port connection is provided in the development kit and can be used in applications requiring a physical connection to Ethernet. This is directly controlled by Microchip's ENC424J600 Stand-Alone 10/100 Ethernet Controller and this is this is interfaced with the on-board uC through SPI. Please refer to the *Schematics* section for further connection information.

Dot Matrix LCD

The ADF7xxxMB4z has DOGM128E 128 x 64 Dot Matrix LCD. This can be used by the developer in battery applications where USB communications is not achievable. Future code revisions will have more screen capabilities with the selection menu available on screen, to allow the user to operate the ADF7xxx completely on battery power.

Touch Screen Controller

A Touch Screen Controller is available on the ADF7xxxMB4z. This is an ADI AD7879 resistive touch screen controller. The communications between this controller and the host uC is done through the SPI interface. This hardware allows the developer to evaluate touch screen capabilities in their application.

Low Power Options

The ADF7xxxMB4z can operate in low power mode. In this mode the only peripherals available will be the host uC, the ADF7xxx and the Low power Screen.

The other peripherals are controlled by a chip select line from the host uC.

Schematics

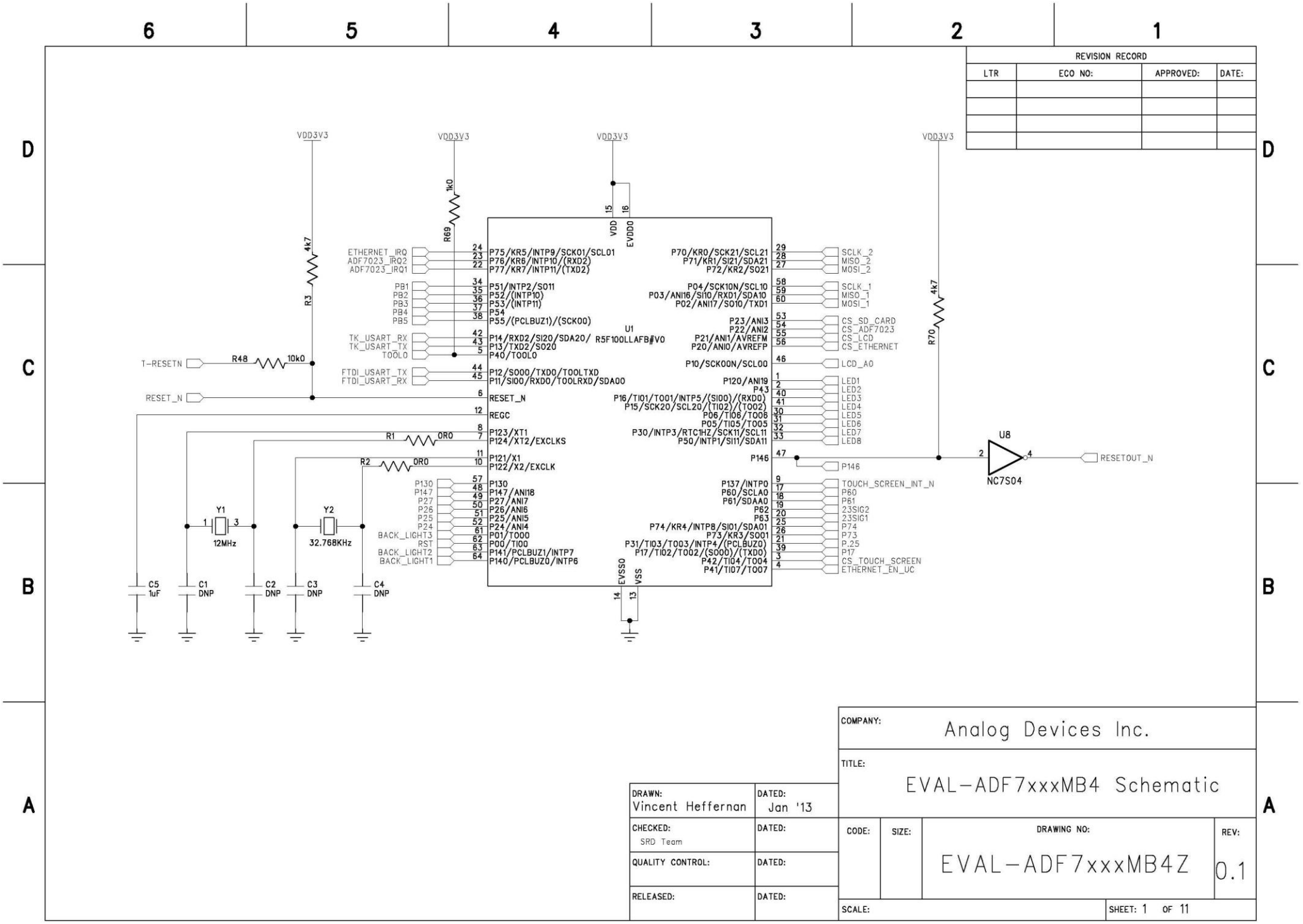
6
5
4
3
2
1
D
C
B
A
REVISION RECORD
LTR
ECO NO:
APPROVED:
DATE:
VDD3V3
R69
1k0
R3
4k7
R70
4k7
U1
R5F100LLAFB#V0
VDD
EVDD0
EVSS0
VSS
ETHERNET_IRQ
ADF7023_IRQ2
ADF7023_IRQ1
PB1
PB2
PB3
PB4
PB5
TK_USART_RX
TK_USART_TX
TOOL0
T-RESETN
R48
10k0
FTDI_USART_TX
FTDI_USART_RX
RESET_N
R1
0R0
R2
0R0
Y1
12MHz
Y2
32.768KHz
C5
1uF
C1
DNP
C2
DNP
C3
DNP
C4
DNP
P130
P147
P27
P26
P25
P24
BACK_LIGHT3
RST
BACK_LIGHT2
BACK_LIGHT1
SCLK_2
MISO_2
MOSI_2
SCLK_1
MISO_1
MOSI_1
CS_SD_CARD
CS_ADF7023
CS_LCD
CS_ETHERNET
LCD_A0
LED1
LED2
LED3
LED4
LED5
LED6
LED7
LED8
U8
NC7S04
RESETOUT_N
TOUCH_SCREEN_INT_N
P60
P61
23SIG2
23SIG1
P74
P73
P.25
P17
CS_TOUCH_SCREEN
ETHERNET_EN_UC
COMPANY:
Analog Devices Inc.
TITLE:
EVAL-ADF7xxxMB4 Schematic
DRAWN:
Vincent Heffernan
DATED:
Jan '13
CHECKED:
SRD Team
QUALITY CONTROL:
RELEASED:
CODE:
SIZE:
DRAWING NO:
EVAL-ADF7xxxMB4Z
REV:
0.1
SCALE:
SHEET: 1 OF 11

REVISION RECORD			
LTR	ECO NO:	APPROVED:	DATE:

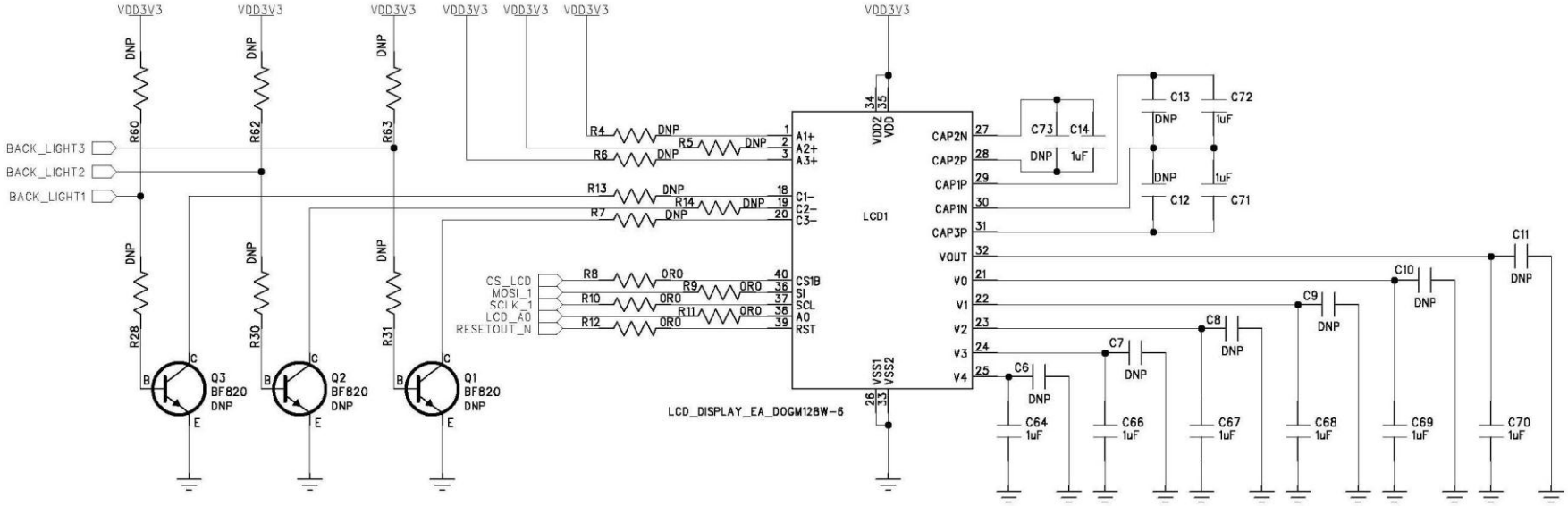

DRAWN: Vincent Heffernan	DATED: Jan '13	COMPANY: Analog Devices Inc.			
CHECKED: SRD Team	DATED:	TITLE: EVAL-ADF7xxxMB4 Schematic			
QUALITY CONTROL:	DATED:	CODE:	SIZE:	DRAWING NO: EVAL-ADF7xxxMB4Z	REV: 0.1
RELEASED:	DATED:	SCALE:		SHEET: 2 OF 11	

REVISION RECORD			
LTR	ECO NO:	APPROVED:	DATE:

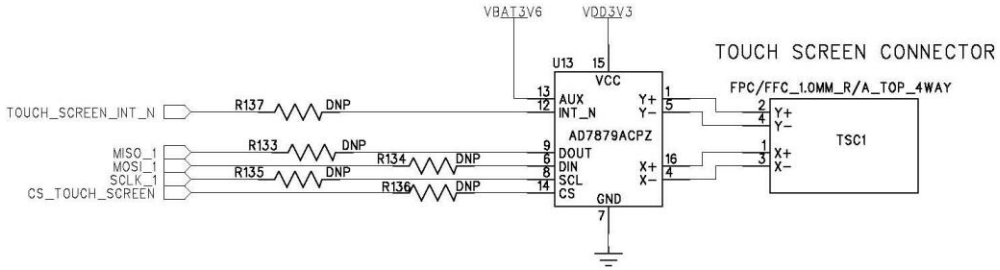

DRAWN: Vincent Heffernan	DATED: Jan '13	COMPANY: Analog Devices Inc.			
CHECKED: SRD Team	DATED:	TITLE: EVAL-ADF7xxxMB4 Schematic			
QUALITY CONTROL:	DATED:	CODE:	SIZE:	DRAWING NO: EVAL-ADF7xxxMB4Z	REV: 0.1
RELEASED:	DATED:	SCALE:		SHEET: 3 OF 11	

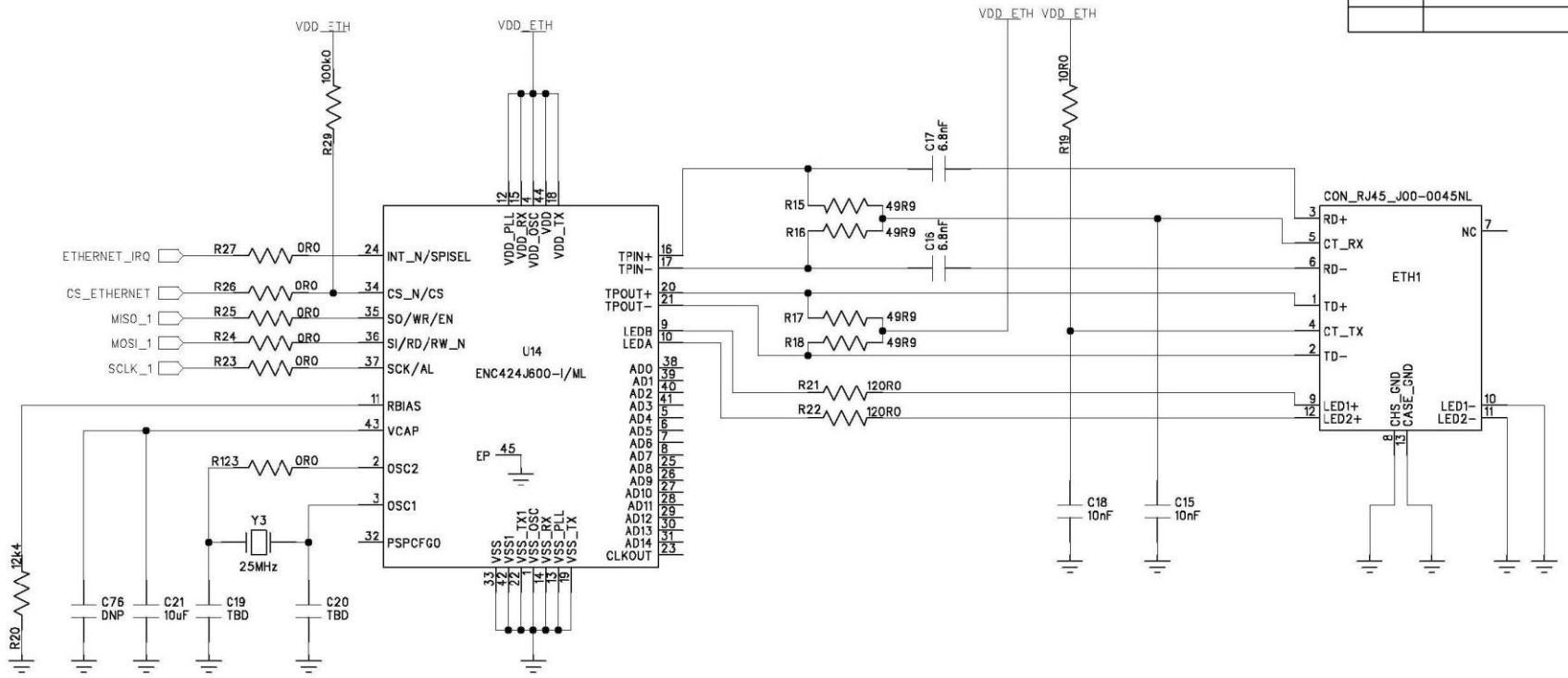

REVISION RECORD			
LTR	ECO NO:	APPROVED:	DATE:

DRAWN: Vincent Heffernan	DATED: Jan '13	COMPANY: Analog Devices Inc.	
CHECKED: SRD Team	DATED:	TITLE: EVAL-ADF7xxxMB4 Schematic	
QUALITY CONTROL:	DATED:	CODE:	SIZE: DRAWING NO: EVAL-ADF7xxxMB4Z REV: 0.1
RELEASED:	DATED:	SCALE:	SHEET: 4 OF 11

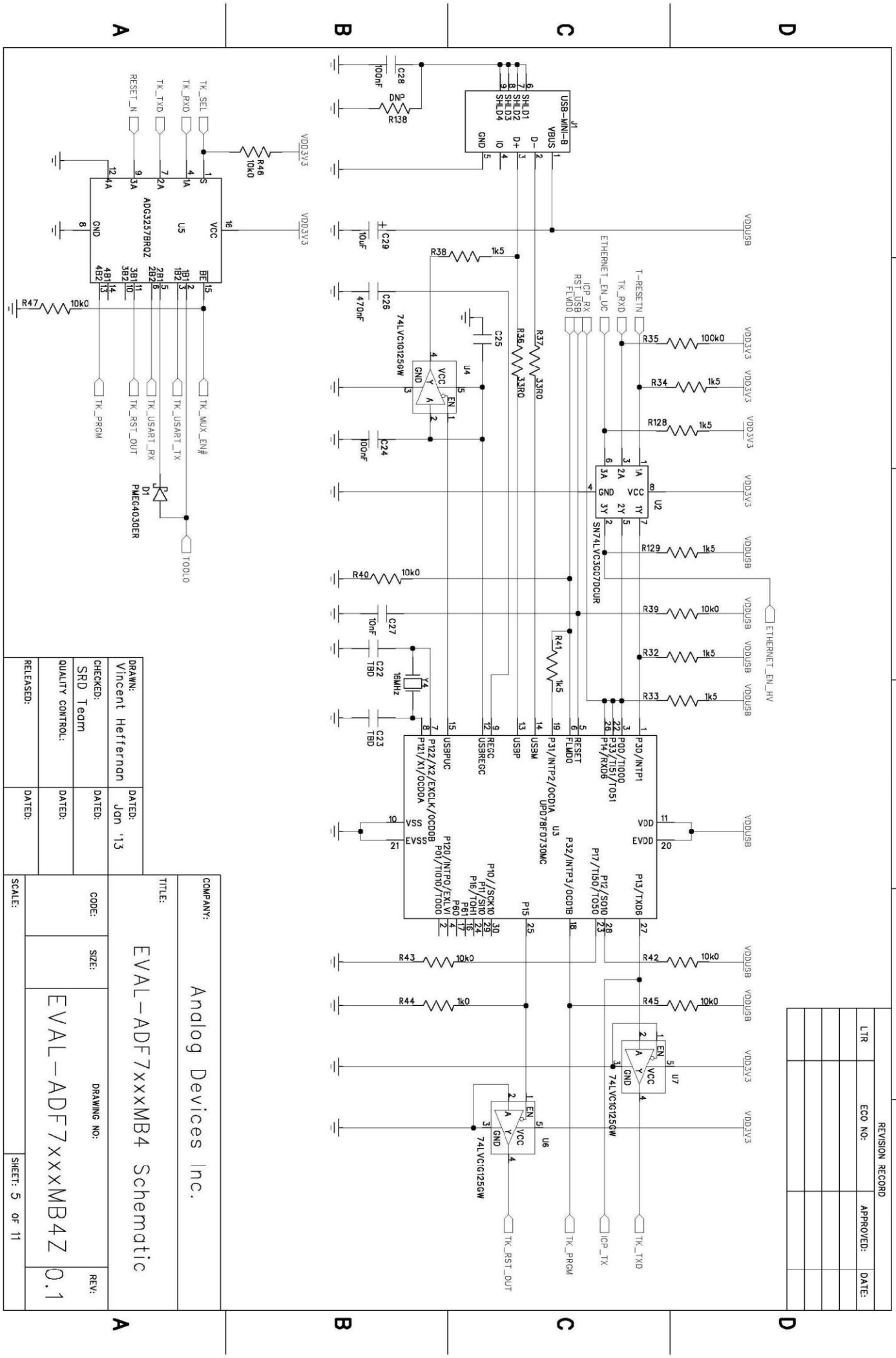

DRAWN: Vincent Heffernan
DATED: Jan '13
CHECKED: SRD Team
QUALITY CONTROL:
RELEASED:
COMPANY: Analog Devices Inc.
TITLE: EVAL-ADF7xxxMB4 Schematic
CODE:
SIZE:
DRAWING NO: EVAL-ADF7xxxMB4Z
REV: 0.1
SCALE:
SHEET: 5 OF 11
REVISION RECORD
LTR
ECO NO:
APPROVED:
DATE:

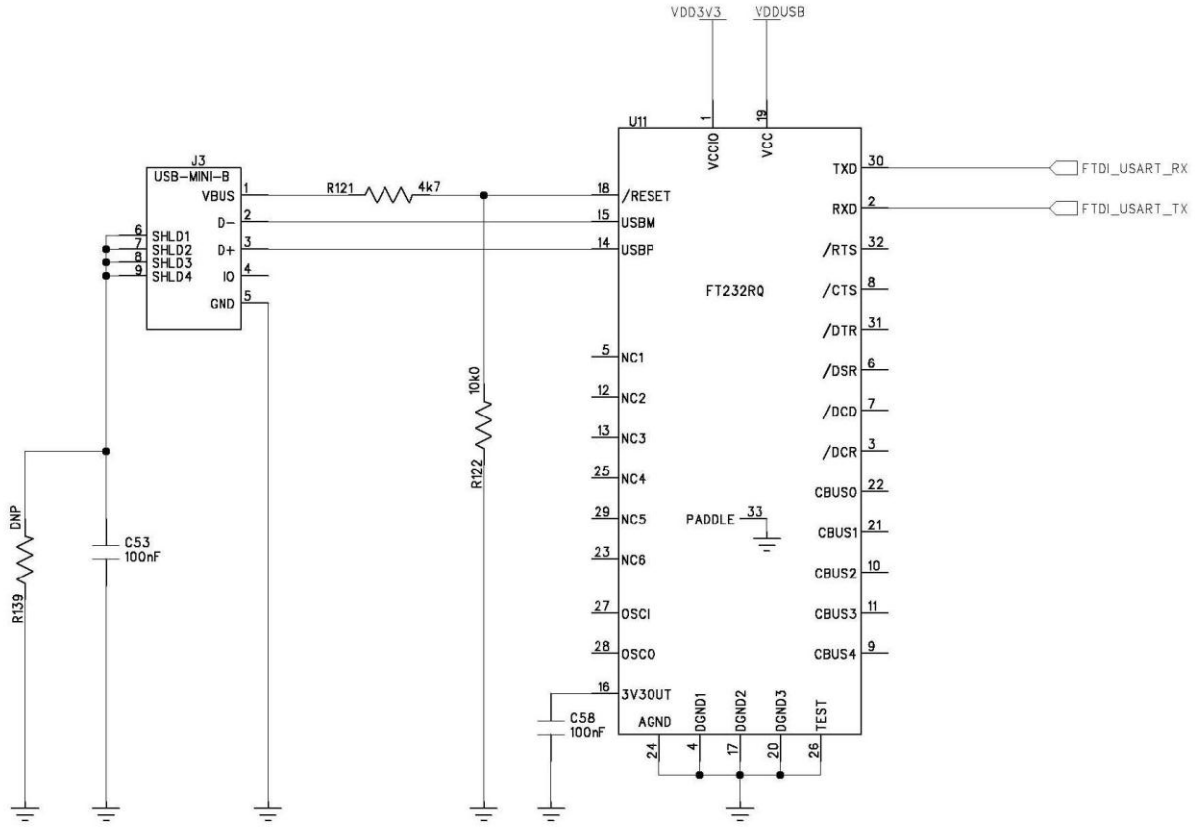

REVISION RECORD			
LTR	ECO NO:	APPROVED:	DATE:

DRAWN: Vincent Heffernan	DATED: Jan '13		
CHECKED: SRD Team	DATED:		
QUALITY CONTROL:	DATED:		
RELEASED:	DATED:		

COMPANY: Analog Devices Inc.			
TITLE: EVAL-ADF7xxxMB4 Schematic			
CODE:	SIZE:	DRAWING NO: EVAL-ADF7xxxMB4Z	REV: 0.1
SCALE:		SHEET: 6 OF 11	

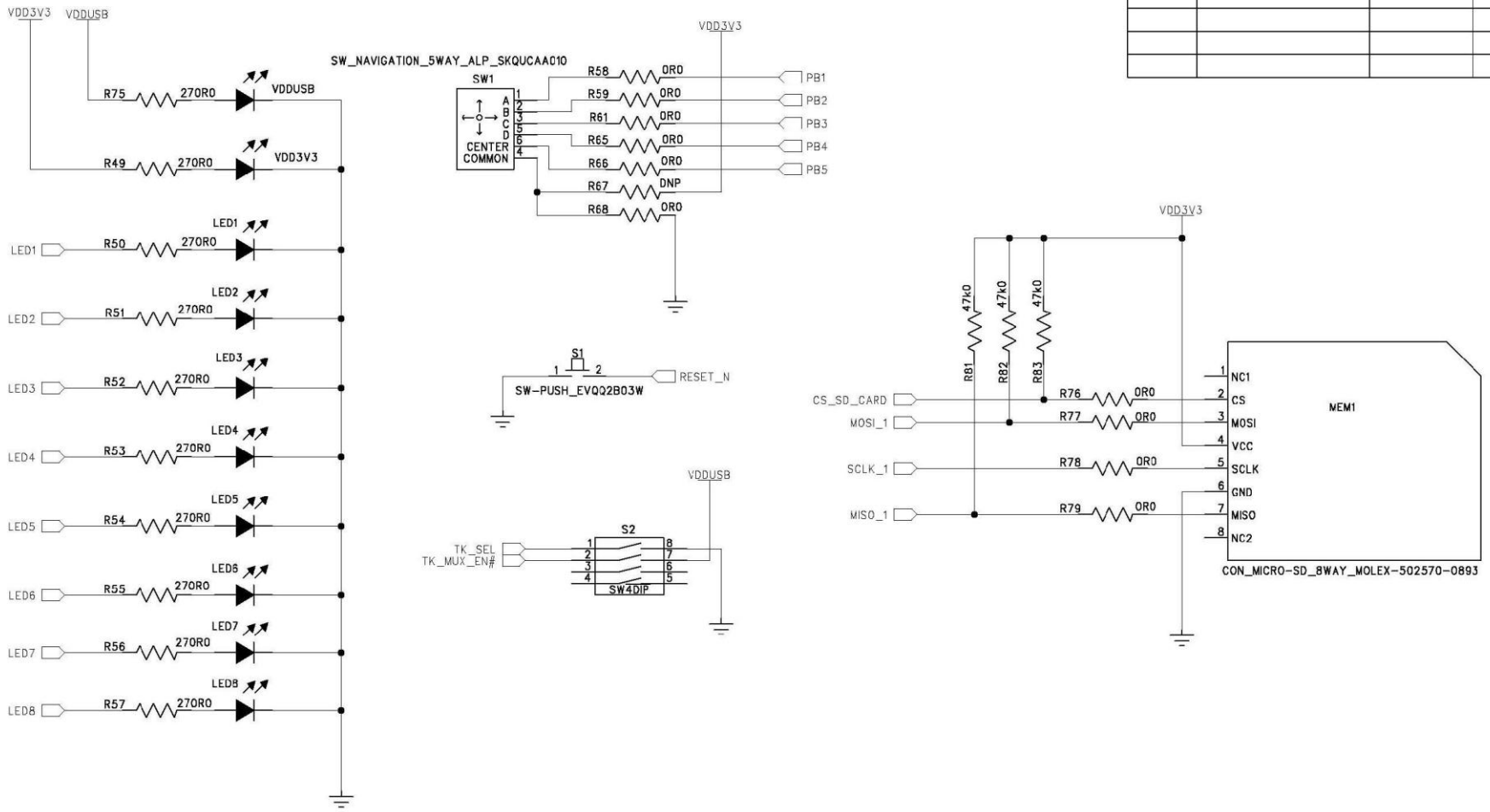

REVISION RECORD			
LTR	ECO NO:	APPROVED:	DATE:

DRAWN: Vincent Heffernan	DATED: Jan '13	COMPANY: Analog Devices Inc.	
CHECKED: SRD Team	DATED:	TITLE: EVAL-ADF7xxxMB4 Schematic	
QUALITY CONTROL:	DATED:	CODE:	SIZE: DRAWING NO: EVAL-ADF7xxxMB4Z REV: 0.1
RELEASED:	DATED:	SCALE:	SHEET: 7 OF 11

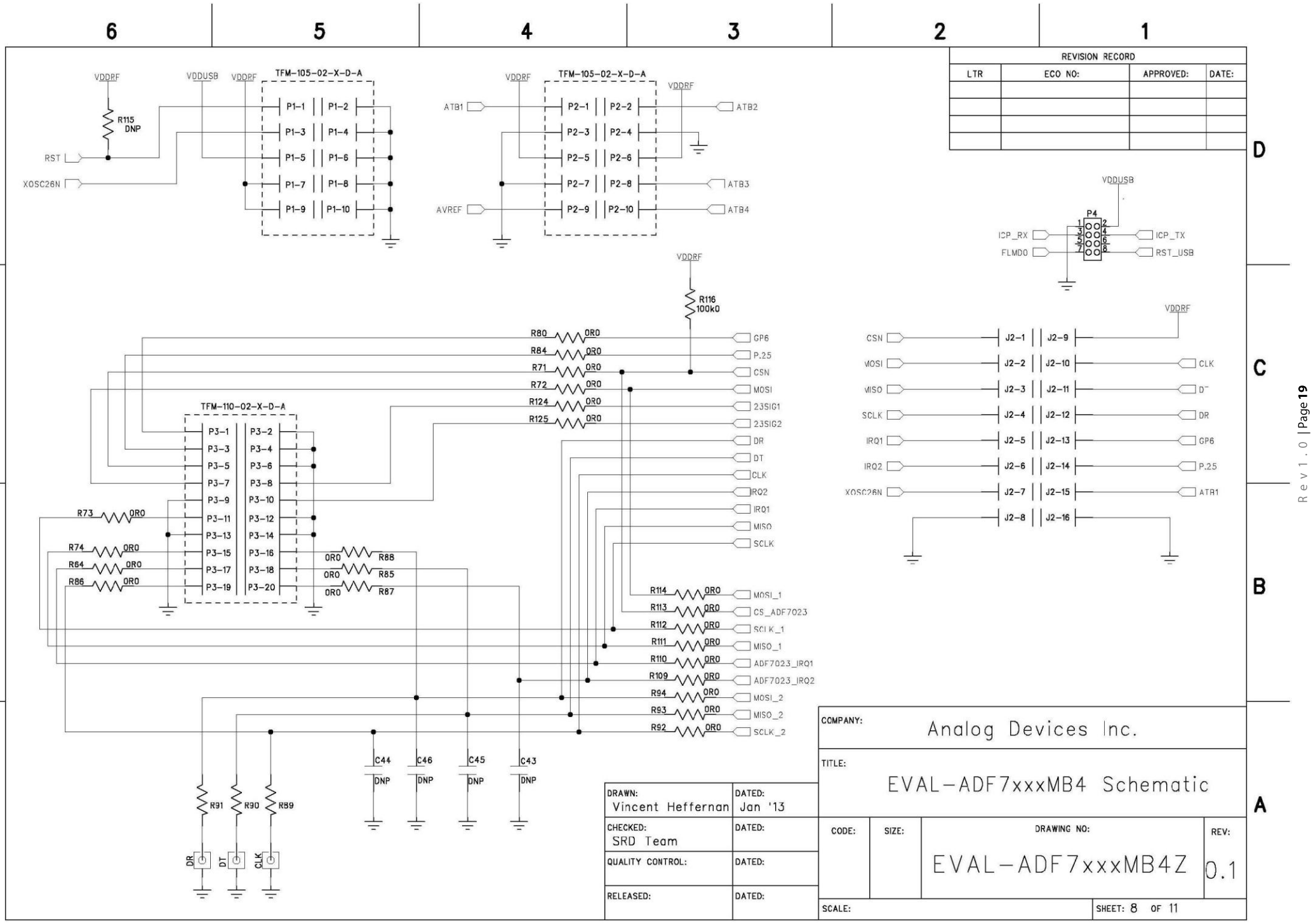
6
5
4
3
2
1
D
C
B
A
REVISION RECORD
LTR
ECO NO:
APPROVED:
DATE:
TFM-105-02-X-D-A
TFM-110-02-X-D-A
VDDRF
VDDUSB
R115 DNP
R116 100k0
RST
XOSC26N
ATB1
ATB2
ATB3
ATB4
AVREF
P4
ICP_RX
ICP_TX
FLMD0
RST_USB
CSN
MOSI
MISO
SCLK
IRQ1
IRQ2
GP6
P.25
23SIG1
23SIG2
DR
DT
CLK
D-
ATR1
R80 0R0
R84 0R0
R71 0R0
R72 0R0
R124 0R0
R125 0R0
R73 0R0
R74 0R0
R64 0R0
R86 0R0
R88 0R0
R85 0R0
R87 0R0
R114 0R0
R113 0R0
R112 0R0
R111 0R0
R110 0R0
R109 0R0
R94 0R0
R93 0R0
R92 0R0
MOSI_1
CS_ADF7023
SCLK_1
MISO_1
ADF7023_IRQ1
ADF7023_IRQ2
MOSI_2
MISO_2
SCLK_2
C44 DNP
C46 DNP
C45 DNP
C43 DNP
R91
R90
R89
DR
DT
CLK
DRAWN: Vincent Heffernan
DATED: Jan '13
CHECKED: SRD Team
DATED:
QUALITY CONTROL:
DATED:
RELEASED:
DATED:
COMPANY: Analog Devices Inc.
TITLE: EVAL-ADF7xxxMB4 Schematic
CODE:
SIZE:
DRAWING NO: EVAL-ADF7xxxMB4Z
REV: 0.1
SCALE:
SHEET: 8 OF 11

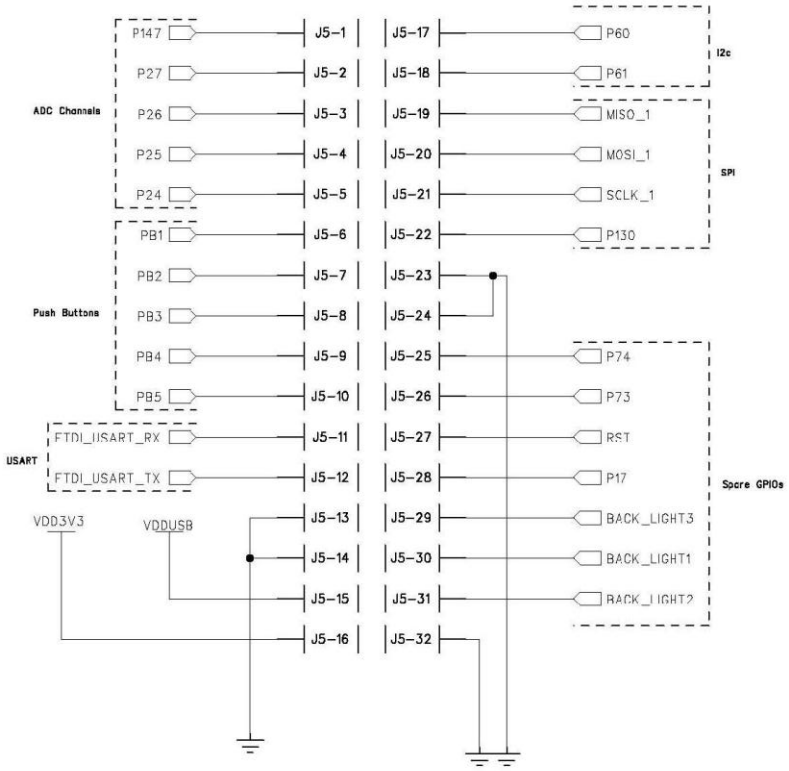

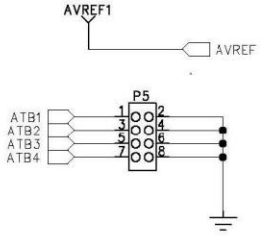

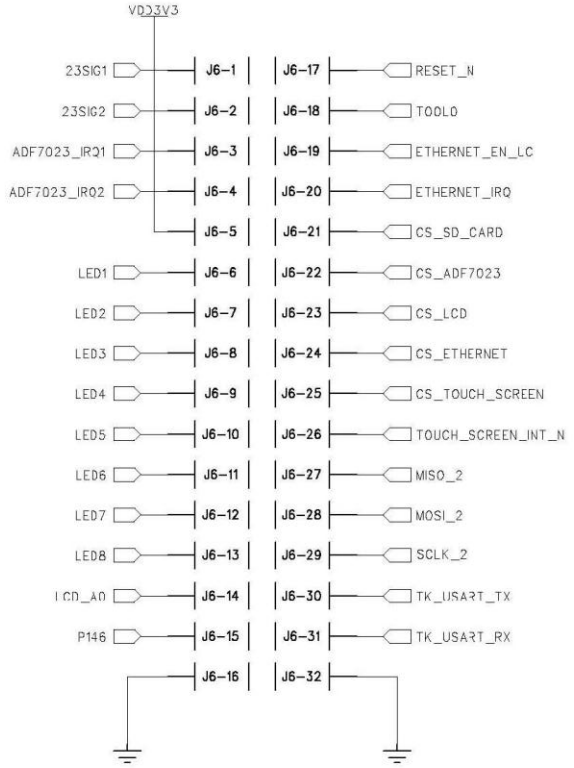

REVISION RECORD			
LTR	ECO NO:	APPROVED:	DATE:

DRAWN: Vincent Heffernan	DATED: Jan '13	COMPANY: Analog Devices Inc.	
CHECKED: SRD Team	DATED:	TITLE: EVAL-ADF7xxxMB4 Schematic	
QUALITY CONTROL:	DATED:	CODE:	SIZE: DRAWING NO: EVAL-ADF7xxxMB4Z REV: 0.1
RELEASED:	DATED:	SCALE:	SHEET: 9 OF 11

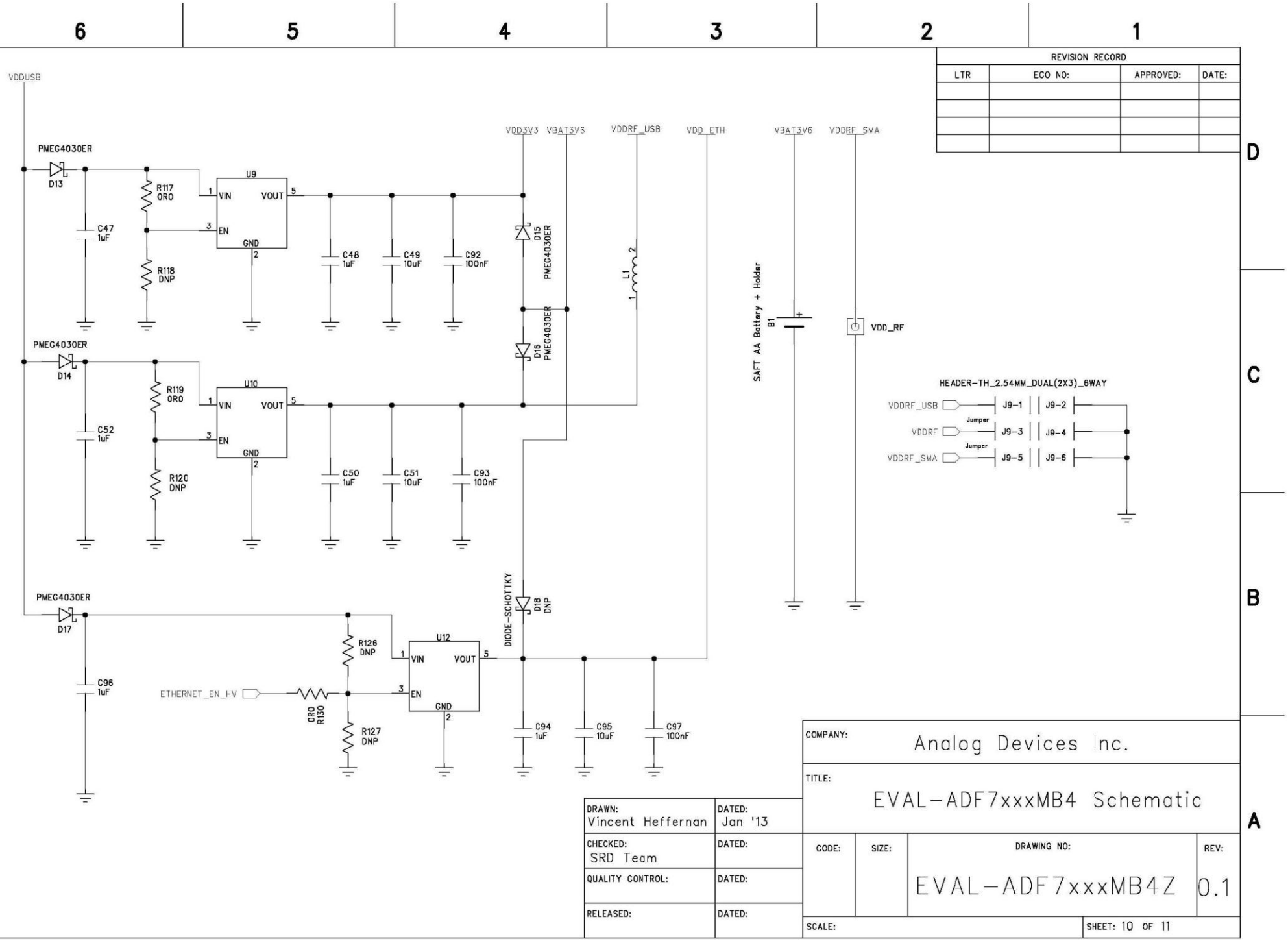
6
5
4
3
2
1
D
C
B
A
REVISION RECORD
LTR
ECO NO:
APPROVED:
DATE:
VDDUSB
PMEG4030ER
D13
R117
0R0
C47
1uF
R118
DNP
U9
VIN
VOUT
EN
GND
C48
1uF
C49
10uF
C92
100nF
VDD3V3
VBAT3V6
VDDRF_USB
VDD_ETH
D15
PMEG4030ER
D16
PMEG4030ER
L1
PMEG4030ER
D14
R119
0R0
C52
1uF
R120
DNP
U10
C50
1uF
C51
10uF
C93
100nF
PMEG4030ER
D17
C96
1uF
ETHERNET_EN_HV
0R0
R130
R126
DNP
R127
DNP
U12
DIODE-SCHOTTKY
D18
DNP
C94
1uF
C95
10uF
C97
100nF
V3AT3V6
VDDRF_SMA
SAFT AA Battery + Holder
B1
VDD_RF
HEADER-TH_2.54MM_DUAL(2X3)_6WAY
VDDRF_USB
J9-1
J9-2
Jumper
VDDRF
J9-3
J9-4
Jumper
VDDRF_SMA
J9-5
J9-6
DRAWN:
Vincent Heffernan
DATED:
Jan '13
CHECKED:
SRD Team
DATED:
QUALITY CONTROL:
DATED:
RELEASED:
DATED:
COMPANY:
Analog Devices Inc.
TITLE:
EVAL-ADF7xxxMB4 Schematic
CODE:
SIZE:
DRAWING NO:
EVAL-ADF7xxxMB4Z
REV:
0.1
SCALE:
SHEET: 10 OF 11

RL87 Sheet

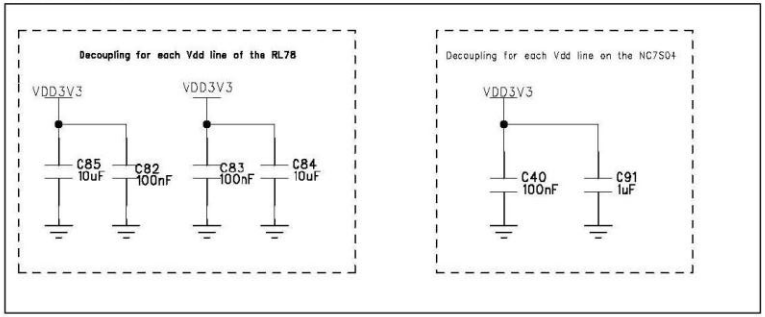

LCD Sheet

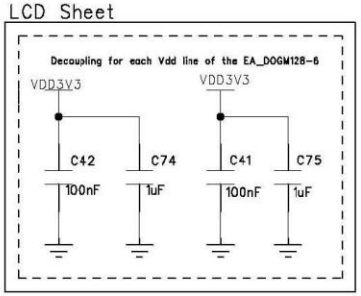

FTDI_UART Sheet

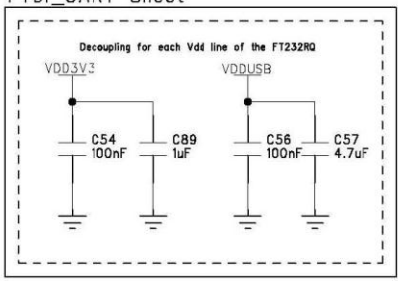

Renesas_UART Sheet

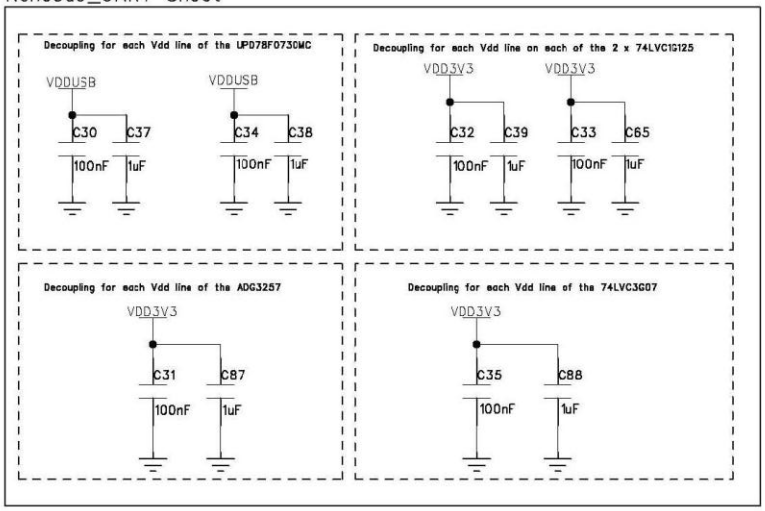

Ethernet Sheet

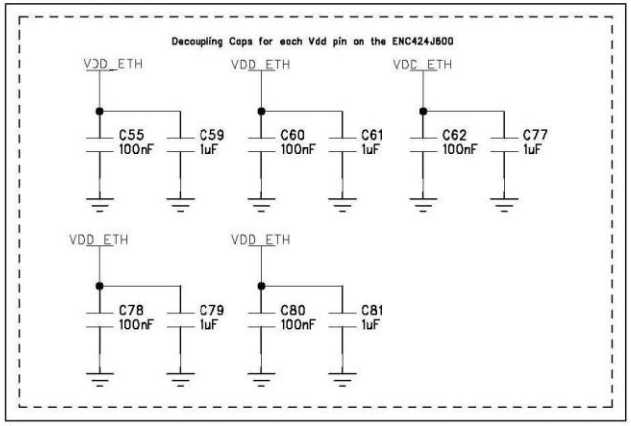

Switches_LEDs_Memory Sheet

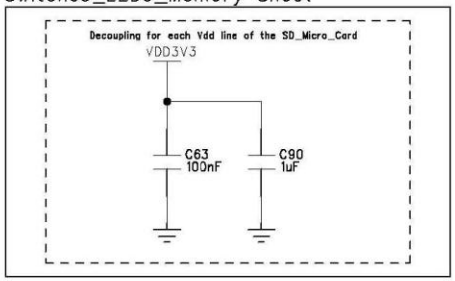

Touch_Screen Sheet

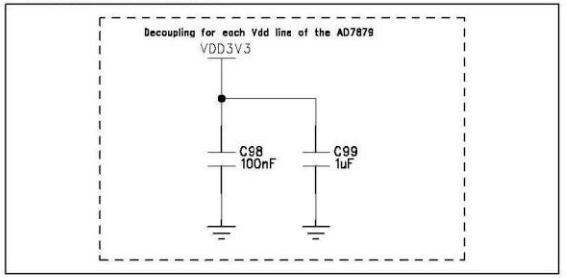

REVISION RECORD			
LTR	ECO NO:	APPROVED:	DATE:

DRAWN: Vincent Heffernan	DATED: Jan '13		
CHECKED: SRD Team	DATED:		
QUALITY CONTROL:	DATED:		
RELEASED:	DATED:		

COMPANY: Analog Devices Inc.

TITLE: EVAL-ADF7xxxMB4 Schematic

CODE:	SIZE:	DRAWING NO:	REV:
		EVAL-ADF7xxxMB4Z	0.1

SCALE: SHEET: 11 OF 11

Bill of Materials (BOM)

Name	PART DESC	Value	Part Number
AVREF1	Black Testpoint		20-3131
B1	SAFT AA Battery + Holder		LST14500 + Cat. No 2460
C1	SMD Capacitor	DNP	TBD
C2	SMD Capacitor	DNP	TBD
C3	SMD Capacitor	DNP	TBD
C4	SMD Capacitor	DNP	TBD
C5	SMD Capacitor	1uF	C1005X5R1C105K050BC
C6	SMD Capacitor	DNP	C1005X5R1C105K
C7	SMD Capacitor	DNP	C1005X5R1C105K
C8	SMD Capacitor	DNP	C1005X5R1C105K
C9	SMD Capacitor	DNP	C1005X5R1C105K
C10	SMD Capacitor	DNP	C1005X5R1C105K
C11	SMD Capacitor	DNP	C1005X5R1C105K
C12	SMD Capacitor	DNP	C1005X5R1C105K
C13	SMD Capacitor	DNP	C1005X5R1C105K
C14	SMD Capacitor	1uF	C1005X5R1C105K050BC
C15	CAP CER 10000PF 100V X7S 0402	10nF	C1005X7S2A103K050BB
C16	CAP CER 6800PF 100V 10% X7S 0402	6.8nF	C1005X7S2A682K
C17	CAP CER 6800PF 100V 10% X7S 0402	6.8nF	C1005X7S2A682K
C18	CAP CER 10000PF 100V X7S 0402	10nF	C1005X7S2A103K050BB
C19	SMD Capacitor	DNP	TBD
C20	SMD Capacitor	DNP	TBD
C21	6.3V X5R Ceramic Capacitor	10uF	GRM188R60J106ME47D
C22	SMD Capacitor	DNP	TBD
C23	SMD Capacitor	DNP	TBD
C24	CAP CER 0.1UF 16V 10% X7R 0402	100nF	GRM155R71C104KA88D
C25	SMD Capacitor	470nF	C1005X5R1C474K050BB
C26	SMD Capacitor	470nF	C1005X5R1C474K050BB
C27	CAP CER 10000PF 100V X7S 0402	10nF	C1005X7S2A103K050BB
C28	CAP CER 0.1UF 16V 10% X7R 0402	100nF	GRM155R71C104KA88D
C29	CAP TANT 10UF 10V 10% 1206	10uF	TAJA106K010RNJ
C30	CAP CER 0.1UF 16V 10% X7R 0402	100nF	GRM155R71C104KA88D
C31	CAP CER 0.1UF 16V 10% X7R 0402	100nF	GRM155R71C104KA88D
C32	CAP CER 0.1UF 16V 10% X7R 0402	100nF	GRM155R71C104KA88D
C33	CAP CER 0.1UF 16V 10% X7R 0402	100nF	GRM155R71C104KA88D
C34	CAP CER 0.1UF 16V 10% X7R 0402	100nF	GRM155R71C104KA88D
C35	CAP CER 0.1UF 16V 10% X7R 0402	100nF	GRM155R71C104KA88D
C37	CAP CER 1UF 10V Y5V 0603	1uF	C1608Y5V1A105Z
C38	CAP CER 1UF 10V Y5V 0603	1uF	C1608Y5V1A105Z
C39	CAP CER 1UF 10V Y5V 0603	1uF	C1608Y5V1A105Z
C40	CAP CER 0.1UF 16V 10% X7R 0402	100nF	GRM155R71C104KA88D
C41	CAP CER 0.1UF 16V 10% X7R 0402	100nF	GRM155R71C104KA88D
C42	CAP CER 0.1UF 16V 10% X7R 0402	100nF	GRM155R71C104KA88D
C43	SMD Capacitor	DNP	TBD
C44	SMD Capacitor	DNP	TBD

Name	PART DESC	Value	Part Number
C45	SMD Capacitor	DNP	TBD
C46	SMD Capacitor	DNP	TBD
C47	SMD Capacitor	1uF	C1005X5R1C105K050BC
C48	SMD Capacitor	1uF	C1005X5R1C105K050BC
C49	6.3V X5R Ceramic Capacitor	10uF	GRM188R60J106ME47D
C50	SMD Capacitor	1uF	C1005X5R1C105K050BC
C51	6.3V X5R Ceramic Capacitor	10uF	GRM188R60J106ME47D
C52	SMD Capacitor	1uF	C1005X5R1C105K050BC
C53	CAP CER 0.1UF 16V 10% X7R 0402	100nF	GRM155R71C104KA88D
C54	CAP CER 0.1UF 16V 10% X7R 0402	100nF	GRM155R71C104KA88D
C55	CAP CER 0.1UF 16V 10% X7R 0402	100nF	GRM155R71C104KA88D
C56	CAP CER 0.1UF 16V 10% X7R 0402	100nF	GRM155R71C104KA88D
C57	CAP CER 4.7UF 6.3V 10% X5R 0402	4.7uF	C1005X5R0J475K050BC
C58	CAP CER 0.1UF 16V 10% X7R 0402	100nF	GRM155R71C104KA88D
C59	CAP CER 1UF 10V Y5V 0603	1uF	C1608Y5V1A105Z
C60	CAP CER 0.1UF 16V 10% X7R 0402	100nF	GRM155R71C104KA88D
C61	CAP CER 1UF 10V Y5V 0603	1uF	C1608Y5V1A105Z
C62	CAP CER 0.1UF 16V 10% X7R 0402	100nF	GRM155R71C104KA88D
C63	CAP CER 0.1UF 16V 10% X7R 0402	100nF	GRM155R71C104KA88D
C64	SMD Capacitor	1uF	C1005X5R1C105K050BC
C65	CAP CER 1UF 10V Y5V 0603	1uF	C1608Y5V1A105Z
C66	SMD Capacitor	1uF	C1005X5R1C105K050BC
C67	SMD Capacitor	1uF	C1005X5R1C105K050BC
C68	SMD Capacitor	1uF	C1005X5R1C105K050BC
C69	SMD Capacitor	1uF	C1005X5R1C105K050BC
C70	SMD Capacitor	1uF	C1005X5R1C105K050BC
C71	SMD Capacitor	1uF	C1005X5R1C105K050BC
C72	SMD Capacitor	1uF	C1005X5R1C105K050BC
C73	SMD Capacitor	DNP	C1005X5R1C105K
C74	CAP CER 1UF 10V Y5V 0603	1uF	C1608Y5V1A105Z
C75	CAP CER 1UF 10V Y5V 0603	1uF	C1608Y5V1A105Z
C76	6.3V X5R Ceramic Capacitor	DNP	GRM188R60J106ME47D
C77	CAP CER 1UF 10V Y5V 0603	1uF	C1608Y5V1A105Z
C78	CAP CER 0.1UF 16V 10% X7R 0402	100nF	GRM155R71C104KA88D
C79	CAP CER 1UF 10V Y5V 0603	1uF	C1608Y5V1A105Z
C80	CAP CER 0.1UF 16V 10% X7R 0402	100nF	GRM155R71C104KA88D
C81	CAP CER 1UF 10V Y5V 0603	1uF	C1608Y5V1A105Z
C82	CAP CER 0.1UF 16V 10% X7R 0402	100nF	GRM155R71C104KA88D
C83	CAP CER 0.1UF 16V 10% X7R 0402	100nF	GRM155R71C104KA88D
C84	6.3V X5R Ceramic Capacitor	10uF	GRM188R60J106ME47D
C85	6.3V X5R Ceramic Capacitor	10uF	GRM188R60J106ME47D
C87	CAP CER 1UF 10V Y5V 0603	1uF	C1608Y5V1A105Z
C88	CAP CER 1UF 10V Y5V 0603	1uF	C1608Y5V1A105Z
C89	CAP CER 1UF 10V Y5V 0603	1uF	C1608Y5V1A105Z
C90	CAP CER 1UF 10V Y5V 0603	1uF	C1608Y5V1A105Z
C91	CAP CER 1UF 10V Y5V 0603	1uF	C1608Y5V1A105Z
C92	CAP CER 0.1UF 16V 10% X7R 0402	100nF	GRM155R71C104KA88D

Name	PART DESC	Value	Part Number
C93	CAP CER 0.1UF 16V 10% X7R 0402	100nF	GRM155R71C104KA88D
C94	SMD Capacitor	1uF	C1005X5R1C105K050BC
C95	6.3V X5R Ceramic Capacitor	10uF	GRM188R60J106ME47D
C96	SMD Capacitor	1uF	C1005X5R1C105K050BC
C97	CAP CER 0.1UF 16V 10% X7R 0402	100nF	GRM155R71C104KA88D
C98	CAP CER 0.1UF 16V 10% X7R 0402	100nF	GRM155R71C104KA88D
C99	CAP CER 1UF 10V Y5V 0603	1uF	C1608Y5V1A105Z
CLK	SOCKET, SMA, RIGHT ANGLE, 50OHM		5-1814400-1
D1	DIODE, SCHOTT RECT, 40V, 3A, SOD123W	40V, 3A	PMEG4030ER
D13	DIODE, SCHOTT RECT, 40V, 3A, SOD123W	40V, 3A	PMEG4030ER
D14	DIODE, SCHOTT RECT, 40V, 3A, SOD123W	40V, 3A	PMEG4030ER
D15	DIODE, SCHOTT RECT, 40V, 3A, SOD123W	40V, 3A	PMEG4030ER
D16	DIODE, SCHOTT RECT, 40V, 3A, SOD123W	40V, 3A	PMEG4030ER
D17	DIODE, SCHOTT RECT, 40V, 3A, SOD123W	40V, 3A	PMEG4030ER
D18	DIODE, SCHOTT RECT, 40V, 3A, SOD123W	**DNP**	PMEG4030ER
DR	SOCKET, SMA, RIGHT ANGLE, 50OHM		5-1814400-1
DT	SOCKET, SMA, RIGHT ANGLE, 50OHM		5-1814400-1
ETH1	Modular RJ45 Jack with Magnetics		J00-0045NL
J1	USB Mini-B Connector (usb-otg)		56579-0576
J2	HEADER-TH_2.54MM_DUAL(2x8)_16WAY		TLW-108-05-G-D
J3	USB Mini-B Connector (usb-otg)		56579-0576
J5	HEADER-TH_2.54MM_DUAL(2x6)_32WAY	**DNP**	TD-116-G-A
J6	HEADER-TH_2.54MM_DUAL(2x6)_32WAY	**DNP**	TD-116-G-A
J9	SAMTEC - TLW-103-05-G-D - HEADER, 2.54MM, DUAL, 6WAY		TLW-103-05-G-D
L1	Ferrite Bead	600 ohms @ 100MHz	BLM31AJ601SN1L
LCD1	LCD Graphic Display Module & SOCKET, 2.54MM, SMT, 1X20WAY + 2x 3WAY		SAMTEC SSM-120-L-SV + 2 x SSM-103-L-SVEA DOGM128W-6
LED1	LED CHIPLED 570NM GREEN 0603 SMD	Green	LG Q971-KN-1
LED2	LED CHIPLED 570NM GREEN 0603 SMD	Green	LG Q971-KN-1
LED3	LED CHIPLED 570NM GREEN 0603 SMD	Green	LG Q971-KN-1
LED4	LED CHIPLED 570NM GREEN 0603 SMD	Green	LG Q971-KN-1
LED5	LED CHIPLED 570NM GREEN 0603 SMD	Green	LG Q971-KN-1

Name	PART DESC	Value	Part Number
LED4	LED CHIPLED 570NM GREEN 0603 SMD	Green	LG Q971-KN-1
LED5	LED CHIPLED 570NM GREEN 0603 SMD	Green	LG Q971-KN-1
LED6	LED CHIPLED 570NM GREEN 0603 SMD	Green	LG Q971-KN-1
LED7	LED CHIPLED 570NM GREEN 0603 SMD	Green	LG Q971-KN-1
LED8	LED CHIPLED 570NM GREEN 0603 SMD	Green	LG Q971-KN-1
MEM1	MOLEX - 502570-0893 - MEMORY CARD CONNECTOR, MICROSD, 8WAY		502570-0893
P1	10-Pin (2x5) 1.27mm Pitch Header Alignment Pins		TFM-105-02-S-D-A
P2	10-Pin (2x5) 1.27mm Pitch Header Alignment Pins		TFM-105-02-S-D-A
P3	20-Pin (2x10) 1.27mm Pitch Header		TFM-110-02-S-D-A
P4	HEADER, 2.54MM, SMT, 2X4WAY		1241050-4
P5	SAMTEC - TLW-104-05-G-D - HEADER, 2.54MM, DUAL, 8WAY	**DNP**	TLW-104-05-G-D
Q1	TRANSISTOR, NPN, SOT-23	**DNP**	BF820
Q2	TRANSISTOR, NPN, SOT-23	**DNP**	BF820
Q3	TRANSISTOR, NPN, SOT-23	**DNP**	BF820
R1	RES 0.0 OHM 1/16W 0402 SMD	0R0	MCR01MZPJ000
R2	RES 0.0 OHM 1/16W 0402 SMD	0R0	MCR01MZPJ000
R3	RESISTOR,	4k7	MCR01MRTJ472
R4	DNP	**DNP**	DNP
R5	DNP	**DNP**	DNP
R6	DNP	**DNP**	DNP
R7	DNP	**DNP**	DNP
R8	RES 0.0 OHM 1/16W 0402 SMD	**0R0**	MCR01MZPJ000
R9	RES 0.0 OHM 1/16W 0402 SMD	**0R0**	MCR01MZPJ000
R10	RES 0.0 OHM 1/16W 0402 SMD	**0R0**	MCR01MZPJ000
R11	RES 0.0 OHM 1/16W 0402 SMD	**0R0**	MCR01MZPJ000
R12	RES 0.0 OHM 1/16W 0402 SMD	**0R0**	MCR01MZPJ000
R13	DNP	**DNP**	DNP
R14	DNP	**DNP**	DNP
R15	RESISTOR,	**49R9**	RMCF0402FT49R9

Name	PART DESC	Value	Part Number
R16	RESISTOR,	49R9	RMCF0402FT49R9
R17	RESISTOR,	49R9	RMCF0402FT49R9
R18	RESISTOR,	49R9	RMCF0402FT49R9
R19	RES 10.0 OHM 1/10W 1% 0402 SMD	10R0	ERJ-2RKF10R0X
R20	RES 12.4K OHM 1/16W 0.5% 0402SMD	12k4	RR0510P-1242-D
R21	RES 120 OHM 1/10W 5% 0402 SMD	120R0	ERJ-2GEJ121X
R22	RES 120 OHM 1/10W 5% 0402 SMD	120R0	ERJ-2GEJ121X
R23	RES 0.0 OHM 1/16W 0402 SMD	0R0	MCR01MZPJ000
R24	RES 0.0 OHM 1/16W 0402 SMD	0R0	MCR01MZPJ000
R25	RES 0.0 OHM 1/16W 0402 SMD	0R0	MCR01MZPJ000
R26	RES 0.0 OHM 1/16W 0402 SMD	0R0	MCR01MZPJ000
R27	RES 0.0 OHM 1/16W 0402 SMD	0R0	MCR01MZPJ000
R28	DNP	**DNP**	DNP
R29	RES 100K OHM 1/16W 1% 0402 SMD	100k0	MCR01MZPF1003
R30	DNP	**DNP**	DNP
R31	DNP	**DNP**	DNP
R32	RES 1.5K OHM 1/16W 1% 0402 SMD	**1k5**	RMCF0402FT1K50
R33	RES 1.5K OHM 1/16W 1% 0402 SMD	**1k5**	RMCF0402FT1K50
R34	RES 1.5K OHM 1/16W 1% 0402 SMD	**1k5**	RMCF0402FT1K50
R35	RES 100K OHM 1/16W 1% 0402 SMD	**100k0**	MCR01MZPF1003
R36	RES 33.0 OHM 1/16W 1% 0402 SMD	**33R0**	MCR01MRTF33R0
R37	RES 33.0 OHM 1/16W 1% 0402 SMD	**33R0**	MCR01MRTF33R0
R38	RES 1.5K OHM 1/16W 1% 0402 SMD	**1k5**	RMCF0402FT1K50
R39	RES 10.0K OHM 1/16W 1% 0402 SMD	**10k0**	RC0402FR-0710KL
R40	RES 10.0K OHM 1/16W 1% 0402 SMD	**10k0**	RC0402FR-0710KL
R41	RES 1.5K OHM 1/16W 1% 0402 SMD	**1k5**	RMCF0402FT1K50
R42	RES 10.0K OHM 1/16W 1% 0402 SMD	**10k0**	RC0402FR-0710KL
R43	RES 10.0K OHM 1/16W 1% 0402 SMD	**10k0**	RC0402FR-0710KL
R44	RES 1.00K OHM 1/16W 1% 0402 SMD	**1k0**	RC0402FR-071KL
R45	RES 10.0K OHM 1/16W 1% 0402 SMD	**10k0**	RC0402FR-0710KL
R46	RES 10.0K OHM 1/16W 1% 0402 SMD	**10k0**	RC0402FR-0710KL
R47	RES 10.0K OHM 1/16W 1% 0402 SMD	**10k0**	RC0402FR-0710KL
R48	RES 10.0K OHM 1/16W 1% 0402 SMD	**10k0**	RC0402FR-0710KL
R49	RES 270 OHM 1/16W 5% 0402 SMD	**270R0**	MCR01MZPJ271
R50	RES 270 OHM 1/16W 5% 0402 SMD	**270R0**	MCR01MZPJ271
R51	RES 270 OHM 1/16W 5% 0402 SMD	**270R0**	MCR01MZPJ271
R52	RES 270 OHM 1/16W 5% 0402 SMD	**270R0**	MCR01MZPJ271
R53	RES 270 OHM 1/16W 5% 0402 SMD	**270R0**	MCR01MZPJ271

Name	PART DESC	Value	Part Number
R54	RES 270 OHM 1/16W 5% 0402 SMD	270R0	MCR01MZPJ271
R55	RES 270 OHM 1/16W 5% 0402 SMD	270R0	MCR01MZPJ271
R56	RES 270 OHM 1/16W 5% 0402 SMD	270R0	MCR01MZPJ271
R57	RES 270 OHM 1/16W 5% 0402 SMD	270R0	MCR01MZPJ271
R58	RES 0.0 OHM 1/16W 0402 SMD	0R0	MCR01MZPJ000
R59	RES 0.0 OHM 1/16W 0402 SMD	0R0	MCR01MZPJ000
R60	DNP	DNP	DNP
R61	RES 0.0 OHM 1/16W 0402 SMD	0R0	MCR01MZPJ000
R62	DNP	DNP	DNP
R63	DNP	DNP	DNP
R64	RES 0.0 OHM 1/16W 0402 SMD	0R0	MCR01MZPJ000
R65	RES 0.0 OHM 1/16W 0402 SMD	0R0	MCR01MZPJ000
R66	RES 0.0 OHM 1/16W 0402 SMD	0R0	MCR01MZPJ000
R67	DNP	DNP	DNP
R68	RES 0.0 OHM 1/16W 0402 SMD	0R0	MCR01MZPJ000
R69	RES 1.00K OHM 1/16W 1% 0402 SMD	1k0	RC0402FR-071KL
R70	RESISTOR,	4k7	MCR01MRTJ472
R71	RES 0.0 OHM 1/16W 0402 SMD	0R0	MCR01MZPJ000
R72	RES 0.0 OHM 1/16W 0402 SMD	0R0	MCR01MZPJ000
R73	RES 0.0 OHM 1/16W 0402 SMD	0R0	MCR01MZPJ000
R74	RES 0.0 OHM 1/16W 0402 SMD	0R0	MCR01MZPJ000
R75	RES 270 OHM 1/16W 5% 0402 SMD	270R0	MCR01MZPJ271
R76	RES 0.0 OHM 1/16W 0402 SMD	0R0	MCR01MZPJ000
R77	RES 0.0 OHM 1/16W 0402 SMD	0R0	MCR01MZPJ000
R78	RES 0.0 OHM 1/16W 0402 SMD	0R0	MCR01MZPJ000
R79	RES 0.0 OHM 1/16W 0402 SMD	0R0	MCR01MZPJ000
R80	RES 0.0 OHM 1/16W 0402 SMD	0R0	MCR01MZPJ000
R81	RES 47.0K OHM 1/10W 1% 0402 SMD	47k0	ERJ-2RKF4702X
R82	RES 47.0K OHM 1/10W 1% 0402 SMD	47k0	ERJ-2RKF4702X
R83	RES 47.0K OHM 1/10W 1% 0402 SMD	47k0	ERJ-2RKF4702X
R84	RES 0.0 OHM 1/16W 0402 SMD	0R0	MCR01MZPJ000
R85	RES 0.0 OHM 1/16W 0402 SMD	0R0	MCR01MZPJ000
R86	RES 0.0 OHM 1/16W 0402 SMD	0R0	MCR01MZPJ000
R87	RES 0.0 OHM 1/16W 0402 SMD	0R0	MCR01MZPJ000
R88	RES 0.0 OHM 1/16W 0402 SMD	0R0	MCR01MZPJ000
R89	RES 0.0 OHM 1/16W 0402 SMD	0R0	MCR01MZPJ000
R90	RES 0.0 OHM 1/16W 0402 SMD	0R0	MCR01MZPJ000
R91	RES 0.0 OHM 1/16W 0402 SMD	0R0	MCR01MZPJ000
R92	RES 0.0 OHM 1/16W 0402 SMD	0R0	MCR01MZPJ000
R93	RES 0.0 OHM 1/16W 0402 SMD	0R0	MCR01MZPJ000
R94	RES 0.0 OHM 1/16W 0402 SMD	0R0	MCR01MZPJ000
R109	RES 0.0 OHM 1/16W 0402 SMD	0R0	MCR01MZPJ000
R110	RES 0.0 OHM 1/16W 0402 SMD	0R0	MCR01MZPJ000
R111	RES 0.0 OHM 1/16W 0402 SMD	0R0	MCR01MZPJ000
R112	RES 0.0 OHM 1/16W 0402 SMD	0R0	MCR01MZPJ000
R113	RES 0.0 OHM 1/16W 0402 SMD	0R0	MCR01MZPJ000

Name	PART DESC	Value	Part Number
R114	RES 0.0 OHM 1/16W 0402 SMD	0R0	MCR01MZPJ000
R115	DNP	DNP	DNP
R116	RES 100K OHM 1/16W 1% 0402 SMD	100k0	MCR01MZPF1003
R117	RES 0.0 OHM 1/16W 0402 SMD	0R0	MCR01MZPJ000
R118	DNP	DNP	DNP
R119	RES 0.0 OHM 1/16W 0402 SMD	0R0	MCR01MZPJ000
R120	DNP	DNP	DNP
R121	RES 4.70K OHM 1/10W 1% 0402 SMD	4k7	ERJ-2RKF4701X
R122	RES 10.0K OHM 1/16W 1% 0402 SMD	10k0	RC0402FR-0710KL
R123	RES 0.0 OHM 1/16W 0402 SMD	0R0	MCR01MZPJ000
R124	RES 0.0 OHM 1/16W 0402 SMD	0R0	MCR01MZPJ000
R125	RES 0.0 OHM 1/16W 0402 SMD	0R0	MCR01MZPJ000
R126	DNP	DNP	DNP
R127	DNP	DNP	DNP
R128	RES 1.5K OHM 1/16W 1% 0402 SMD	1k5	RMCF0402FT1K50
R129	RES 1.5K OHM 1/16W 1% 0402 SMD	1k5	RMCF0402FT1K50
R130	RES 0.0 OHM 1/16W 0402 SMD	0R0	MCR01MZPJ000
R133	DNP	DNP	DNP
R134	DNP	DNP	DNP
R135	DNP	DNP	DNP
R136	DNP	DNP	DNP
R137	DNP	DNP	DNP
R138	RESISTOR,	DNP	
R139	RES 10.0K OHM 1/16W 1% 0402 SMD	DNP	RC0402FR-0710KL
S1	Switch, SMD Push Button (3.1×6.5 x6mm (H×W×D))		EVQQ2B03W
S2	A6S4101H - SWITCH, DIP, 4 WAY, UNSEALED		A6S4101H
SW1	NAVIGATION SWITCH, 5WAY		SKQUCAA010
TSC1	FCI - SFW4R-2STE9LF - FPC/FFC, 1.0MM, R/A, TOP, 4WAY		SFW4R-2STE9LF
U1	MCU 16BIT 512KB FLASH 64LQFP		R5F100LLAFB#V0
U2	Buffer/Line Driver, Non-Inverting with Open Drain, VSSOP8		SN74LVC3G07DCUR
U3	MCU 8BIT 30SSOP		UPD78F0730MC-CAB-AX
U4	74LVC1G125GW, Logic Buffer		74LVC1G125GW
U5	ADG3257BRQZ - IC, ANALOG MUX/DMUX, QUAD 2 X 1, QSOP-16		ADG3257BRQZ
U6	74LVC1G125GW, Logic Buffer		74LVC1G125GW
U7	74LVC1G125GW, Logic Buffer		74LVC1G125GW
U8	NC7S04M5X - IC, NC7S, SMD		NC7S04M5
U9	3.3V Linear regulator		ADP150AUJZ-3.3
U10	3.3V Linear regulator		ADP150AUJZ-3.3
U11	IC, USB TO UART, SMD, QFN-32, 232		FT232RQ
U12	3.3V Linear regulator		ADP150AUJZ-3.3
U13	IC ADC 12BIT CTRLR TOUCH 16LFCSP		AD7879ACPZ
U14	MICROCHIP - ENC424J600-I/ML - IC, CONTROLLER, ENET, 10/100, 44QFN		ENC424J600-I/ML

Name	PART DESC	Value	Part Number
VDD3V3	LED CHIPLED 570NM GREEN 0603 SMD	Green	LG Q971-KN-1
VDDUSB	LED CHIPLED 570NM GREEN 0603 SMD	Green	LG Q971-KN-1
VDD_RF	SOCKET, SMA, RIGHT ANGLE, 50OHM		5-1814400-1
X1	Circuit Board Spacers SPCS Series 19.1mm standoff		SPCS-12
X2	Circuit Board Spacers SPCS Series 19.1mm standoff		SPCS-12
X3	Circuit Board Spacers SPCS Series 19.1mm standoff		SPCS-12
X4	Circuit Board Spacers SPCS Series 19.1mm standoff		SPCS-12
Y1	CRYSTAL 12.000 MHZ 8 PF SMD	12MHz	NX3225GA-12MHZ- STD-CRG-1
Y2	CRYSTAL 32.768 KHZ 12.5PF SMD	32.768KHz	NX3215SA-32.768K-STD-MUS-2
Y3	CRYSTAL 25.000000 MHZ 20PF SMD	25MHz	FQ5032B-25
Y4	CRYSTAL 16.000 MHZ 8 PF SMD	16MHz	NX3225SA-16MHZ-STD-CSR-6