THIS DRAWING IS UNPUBLISHED. RELEASED FOR PUBLICATION DEC ,1987.
© COPYRIGHT 1987 BY TYCO ELECTRONICS CORPORATION. ALL RIGHTS RESERVED.

LOC	DIST
J	—

REVISIONS 変更

P	LTR	DESCRIPTION	DATE	DWN	APVD
	A	RELEASED	16MAR05	L.Z	I.E.

1. MATERIAL AND FINISH
   PLUG HOUSING AND TINE PLATE
   ; THERMOPLASTIC (UL94V-0) COLOR: BLACK
   REC. CONTACT
   ; COPPER ALLOY FINISH,OVER NICKEL
   MATING END: 0.0002 MIN. OR
   0.00076 MIN. GOLD
   TERMINATION END: TIN
   OVER SEALING TREATMENT.
2. P.C.B. LAYOUT AND P.C.B. TREATMENT(REF.)
   USE A P.C.B. SURFACE ARE TREATED WITH SOLDER RESIST.
3. KINK POSITIONS(4 POSITIONS).

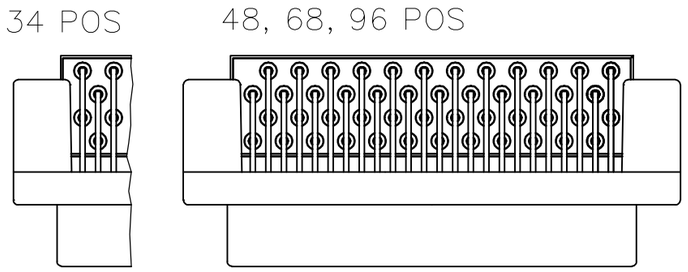

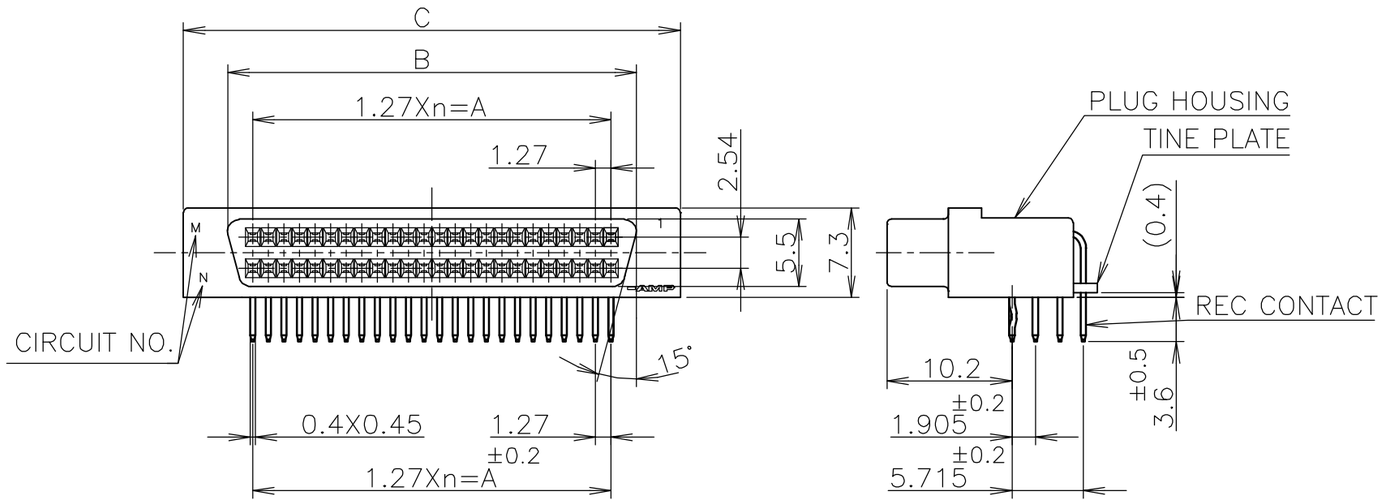

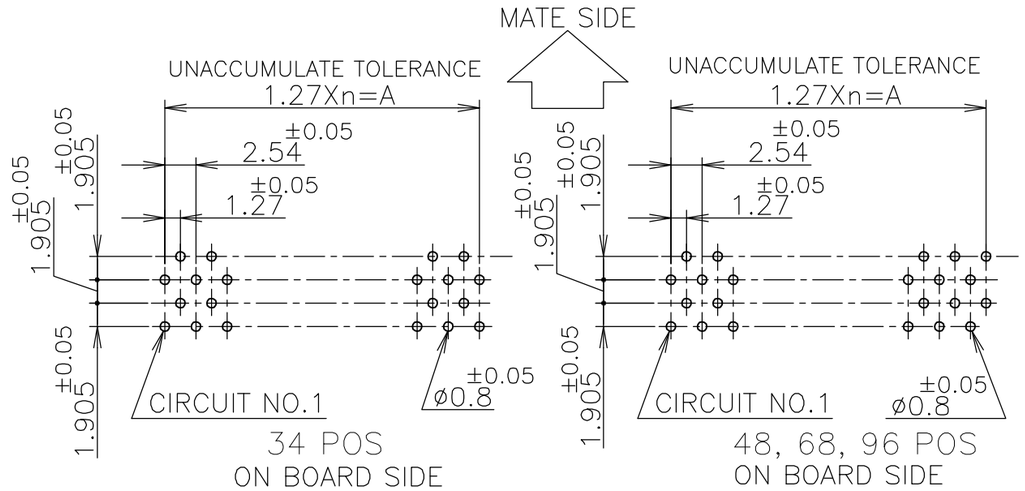

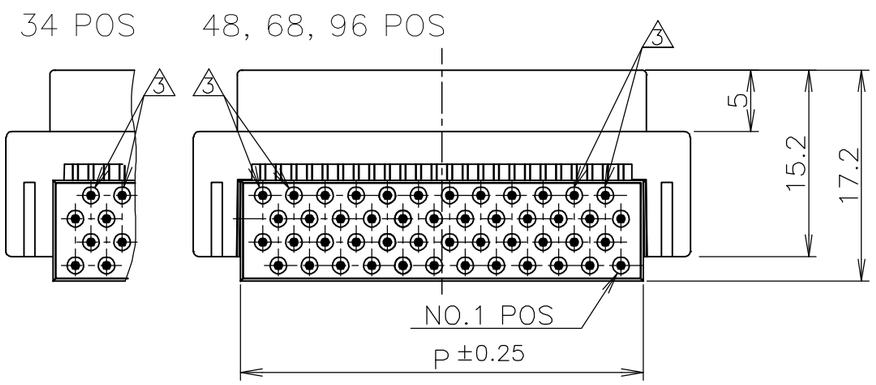

Au PL. 0.00076 MIN	45.51	68	34	41.91	46.08	53.22	33	68	8-5174682-7
Au PL. 0.0002 MIN	45.51	68	34	41.91	46.08	53.22	33	68	3-5174682-7
REMARK	P	N	M	A	B	C	n	POS.	PART NO.
		CIRCUIT NO.		DIMENSION					

THIS DRAWING IS A CONTROLLED DOCUMENT.

DIMENSIONS: 単位：耗 MM

TOLERANCES UNLESS OTHERWISE SPECIFIED: 一般公差
0 PLC ± –
1 PLC ± –
2 PLC ± –
3 PLC ± –
4 PLC ± –
ANGLES ± –

GENERAL TOLERANCE 一般公差
10 ≧ : ±0.2
30 ≧ > 10: ±0.25
100 ≧ > 30: ±0.3
ANGLES: ±3°

MATERIAL 材料 – 1
FINISH 仕上 – 1

DWN GAVIN ZHANG 06JUL04
CHK T. KAWAMAE 06JUL04
APVD I. ENOMOTO 06JUL04
PRODUCT SPEC 製品規格 108-60036
APPLICATION SPEC 取付適用規格
WEIGHT

tyco Electronics
Tyco Electronics AMP K.K.
Kawasaki.Japan

NAME 名称
PLUG ASSY HORIZONTAL (W/KINK)
AMPLIMITE .050 SERIES I B-TO-B CONN.
–

SIZE	CAGE CODE	DRAWING NO 番号	RESTRICTED TO
A3	00779	C-5174682	–

CUSTOMER DRAWING | SCALE 尺度 2:1 | SHEET 1 OF 1 | REV A

AMP 1470-19 REV 31MAR2000