REVISION			
LTR	DESCRIPTION	DATE	APP
A0	NEW RELEASE	05/20/2020	PECK

RoHS Compliant

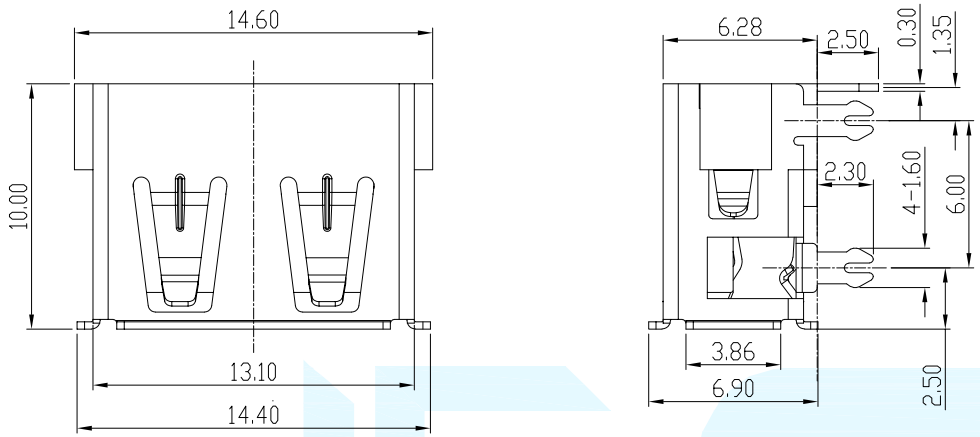

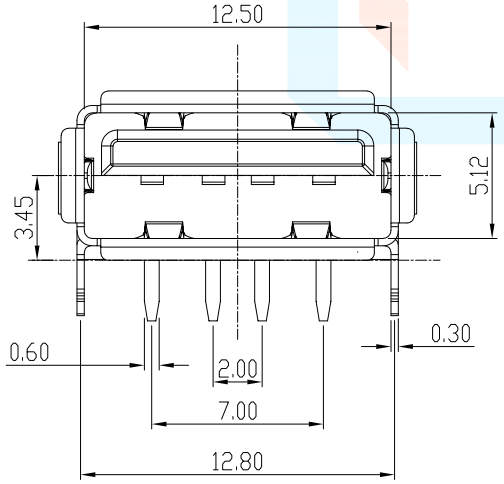

1	VCC	+5V
2	-DATA 0	Neagative Data Channel 0
3	+DATA 0	Positive Data Channel 0
4	GND	Ground

P.C.B LAYOUT

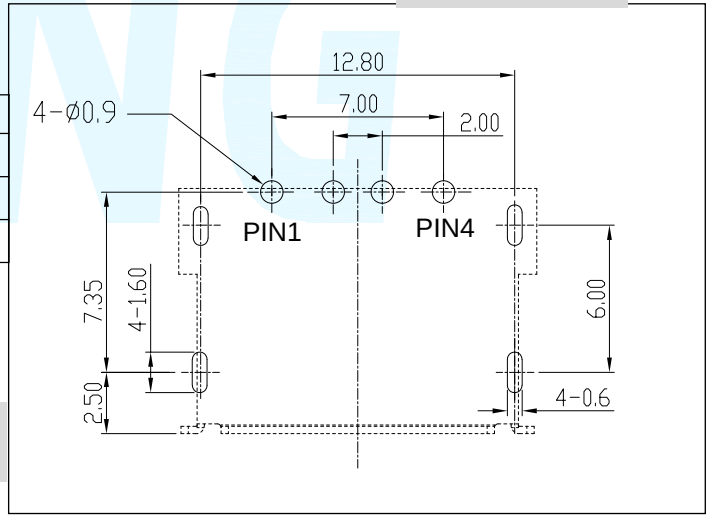

PROJECT \ LEVEL		A[better product]	B[average product]
Electrical Properties	Contact Rating	0.25A, 24V DC	
	Initial Contact Resistance	50mΩ max.	
	Insulation Resistance	100MΩ min.500V DC	Skey/PD：100MΩ min.300V DC
	Withstand Voltage	500V AC for 1 minute	350 V AC for 1 minut
Durable Performance	There No Load	6,000 Cycles	5,000 Cycles
	Rated Load	5,000 Cycles	4,000 Cycles
Sterage temp.		-35℃～+75℃(Operating Temp:)	
Operating Force		IF:20N MAX. (EF:10.0N MIN.)	
Heat Rrsistance		IR Reflow:235℃,5sec. Manual:350℃,3sec.	

Material declaration

No.	NAME	Description
①A	胶芯	黑色 PBT 耐热塑胶
②B	接触端子	磷铜 C5191(镀金 1u″ /焊尾雾锡)
③C	外壳	黄铜 C2680/SPCC[镀镍 50u″ min]

DIMENSION CLASSIFICATION		
■ ：	CRITICAL	
☒ ：	MAJOR	
TOLERANCE TABLE		
.X	±	0.40
.XX	±	0.25
.XXX	±	0.10
ANGLE	±	2°

台灣碩方精密電子科技有限公司
TAIWAN SOFNG PRECISION ELECTRONIC CO., LTD

TITLE	USB-100-P463 短体无边型前插件USB母座			SOFNG 開關,連接器	
PART NO.	USB-100-P463			SERIES	SD106
APPROVED	Peck	DWG NO.	大电流USB连接器		
CHECKED	Paul	SCALE 1:1	UNIT mm	SIZE	A4
DRAWIN	David		REV A0	SHEET NO.	1/1