# PIN RECEPTACLES
## for .032” - .046” diameter pins (#34 contact)

## 8838

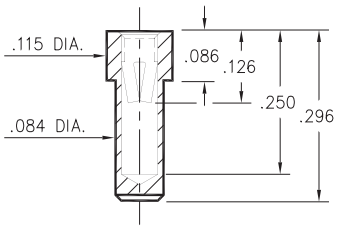


**8838-0-15-XX-34-XX-10-0**
Solder mount in .086 min. mounting hole

## 3100

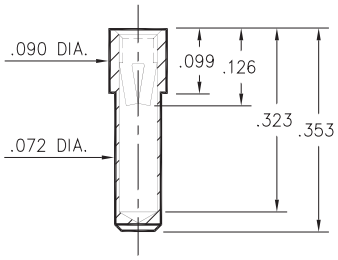


**3100-0-15-XX-34-XX-10-0**
Solder mount in .074 min. mounting hole

## 8853

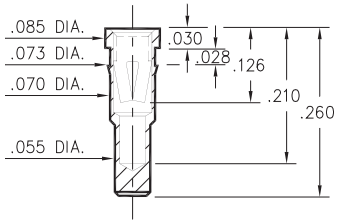


**8853-0-15-XX-34-XX-10-0**
Press-fit in .071 mounting hole

## 6800

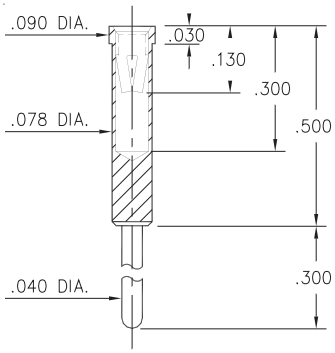


**6800-0-15-XX-34-XX-04-0**
Solder mount in .080 min. mounting hole

## 8206

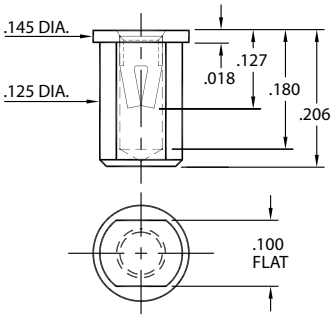


**8206-0-15-XX-34-XX-10-0**
Surface mount

## 0739

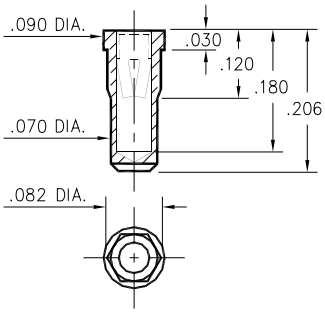


**0739-0-15-XX-34-XX-10-0**
Hex press-fit in .078±.002 plated thru hole

## SPECIFICATIONS

**SHELL MATERIAL:**
Brass Alloy 360, 1/2 Hard

**CONTACT MATERIAL:**
Beryllium Copper Alloy 172, HT

**DIMENSION IN INCHES**
**TOLERANCES ON:**
LENGTHS: ±.005
DIAMETERS: ±.002
ANGLES: ±.002°

**ORDER CODE: XXXX - 0 - 15 - XX - 34 - XX - 10 - 0**

**BASIC PART #**

**SPECIFY SHELL FINISH:**
**01** 200μ" TIN/LEAD OVER NICKEL
**15** 10μ" GOLD OVER NICKEL

**SPECIFY CONTACT FINISH:**
**01** 200μ" TIN/LEAD OVER NICKEL
**14** 10μ" GOLD OVER NICKEL
**27** 30μ" GOLD OVER NICKEL

**CONTACT**
**#34** CONTACT (DATA ON PAGE 212)