SIGN	DATE	DESCRIPTION	APPROVER
1	2009.09.07	The design is changed	Jacke
2	2009.09.07	The electrical is changed	Jacke
3	2010.03.31	Add the 2p mark	Jacke

THIS IS CAD DRAWING, DO NOT REVISE MANUALLY!!!

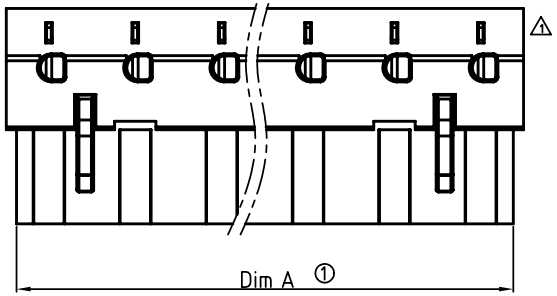

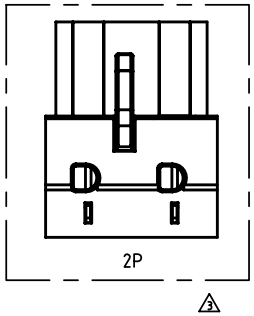

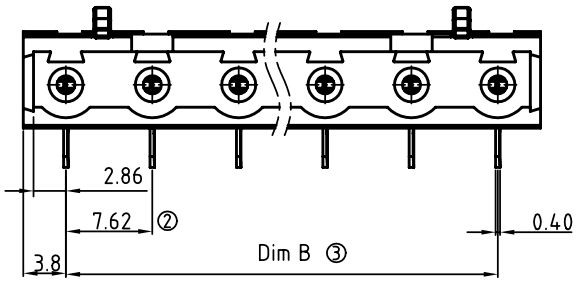

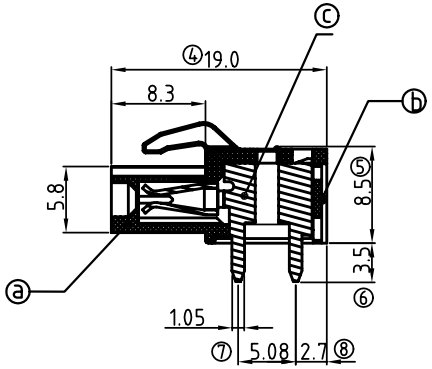

Materials

Item a	Terminal body	Thermoplastic (UL94V-0)
Item b	Terminal Cover	Thermoplastic (UL94V-0)
Item c	Female contact	PhBz(CuSn), Tin plated

2 Electrical

- Voltage rating: 300VAC
- Current rating: 20A
- Withstanding Voltage: 1.6kv
- Operating temperature: -40°C to +115°C
- Soldering temperature: 250°C±10°C/5 Sec
- Safety Approval: c UL us

V7 xx 0 1 x 1 xxxx G

No. OF POLES
02 2 CONTACTS
03 3 CONTACTS
... ...
16 16 CONTACTS

Color
0 Black (RAL9005)
2 Red (RAL3001/D)
3 Orange(RAL2011/P)
4 Yellow(RAL1018/A)
5 Green(RAL6018/T)
6 Blue (RAL5015/A)
8 Grey(RAL7035/D)

G: Pb<40000ppm

0000: "@" Logo (Standard)
000A: "ANYTEK" Mark
Any special item by customer requst. please contact sales department.

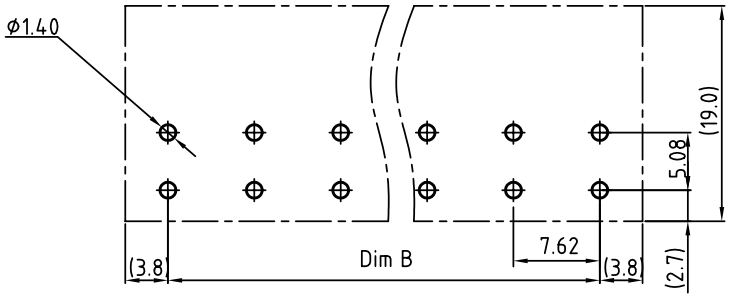

PCB LAYOUT

POLE	2	3	4	5	6	7	8	9	10	11	12	13	14	15	16
B	7.62	15.24	22.86	30.48	38.1	45.72	53.34	60.96	68.58	76.2	83.82	91.44	99.06	106.68	114.3
A	13.34	20.96	28.58	36.2	43.82	51.44	59.06	66.68	74.3	81.92	89.54	97.16	104.78	112.4	120.02
Tol.	±0.15					±0.20						±0.30			

ANYTEK

INSPECTION COPY

ALL RIGHTS RESERVED. REPRODUCTION OR ISSUE TO THIRD PARTIES IN ANY FORM WHATEVER IS NOT PERMITTED WITHOUT WRITTEN AUTHORITY FROM THE PROPRIETOR. PROPERTY OF ANYTEK TECHNOLOGY CO., LTD

TITLE	V7 7.62 W/O flange Series Right-angle (2P~16P)				
PART NO.	V7xx01x1xxxxG			DWG NO.	8V70502
APPROVED	CHECKED	DESIGNED	DRAWN	CUST NO.	
		Jacke 2010.03.31	Jacke 2009.09.07	UNIT: mm	
				SCALE: 1/4	
				SHEET: 01/01	REV.: D

Tolerance	
X.	±0.5
X.X	±0.3
X.XX	±0.1
X°	±1°