THIS DRAWING IS UNPUBLISHED. RELEASED FOR PUBLICATION - ,- .
© COPYRIGHT - By - ALL RIGHTS RESERVED.

LOC	DIST
AD	00

REVISIONS

P	LTR	DESCRIPTION	DATE	DWN	APVD
	C2	REVISED PER ECO-11-005027	11MAR11	RK	HMR

1. MATERIAL: POLYESTER, BLACK.
2. OBSOLETE PART NUMBER.
3. OBSOLETE PARTS: OBSOLETE CIS STREAMLINING PER D.RENAUD/D.SINISI

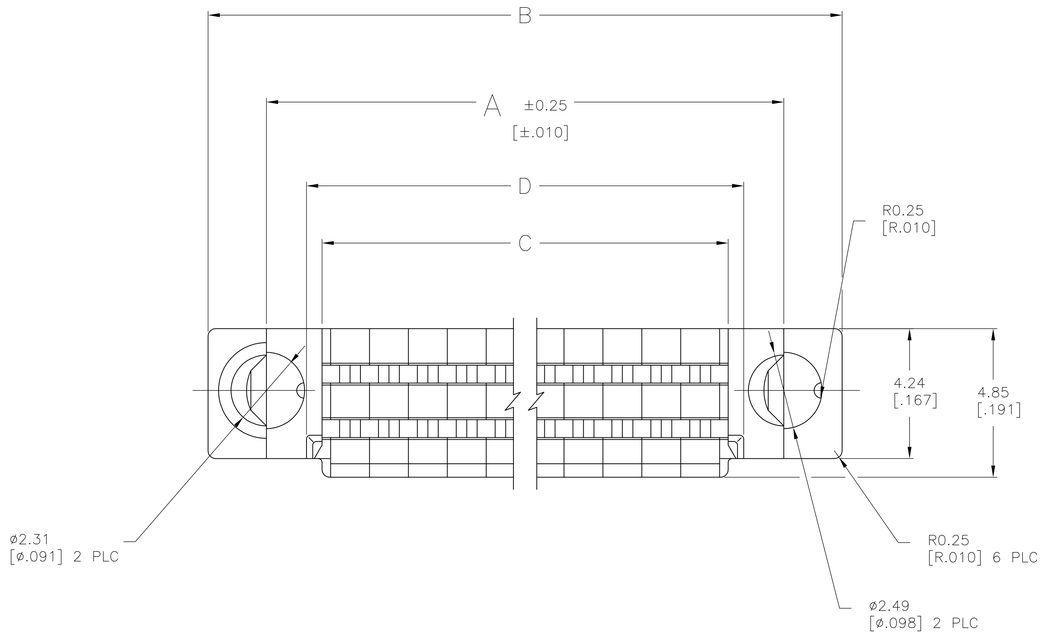

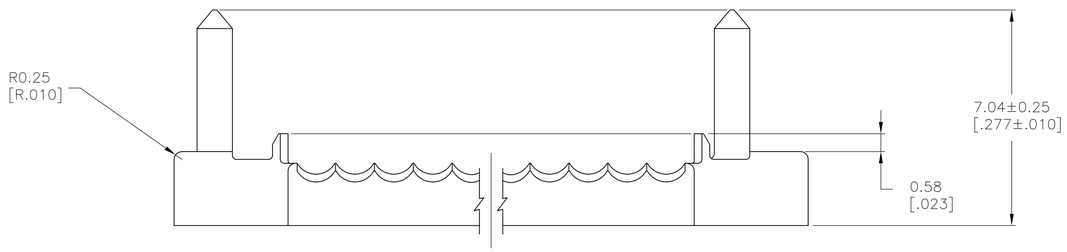

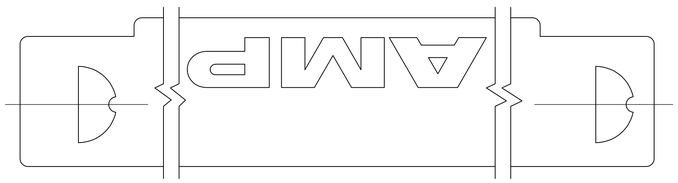

	D	C	B	A	NO OF POSN	PART NUMBER
△2	44.76 [1.762]	43.74 [1.722]	51.18 [2.015]	47.37 [1.865]	~~68~~	1-104891-1
	65.08 [2.562]	64.06 [2.522]	71.50 [2.815]	67.69 [2.665]	100	1-104891-0
△3 OBSOLETE	58.73 [2.312]	57.71 [2.272]	65.15 [2.565]	61.34 [2.415]	90	~~104891-9~~
	52.38 [2.062]	51.36 [2.022]	58.80 [2.315]	54.99 [2.165]	80	104891-8
	46.03 [1.812]	45.01 [1.772]	52.45 [2.065]	48.64 [1.915]	70	104891-7
	39.68 [1.562]	38.66 [1.522]	46.10 [1.815]	42.29 [1.665]	60	104891-6
	33.33 [1.312]	32.31 [1.272]	39.75 [1.565]	35.94 [1.415]	50	104891-5
	26.98 [1.062]	25.96 [1.022]	33.82 [1.315]	29.59 [1.165]	40	104891-4
	20.63 [.812]	19.61 [.772]	27.05 [1.065]	23.24 [.915]	30	104891-3
	14.28 [.562]	13.26 [.522]	20.70 [.815]	16.89 [.665]	20	104891-2
	7.92 [.312]	6.91 [.272]	14.35 [.565]	10.54 [.415]	10	104891-1

THIS DRAWING IS A CONTROLLED DOCUMENT.

DIMENSIONS: mm [INCHES]

TOLERANCES UNLESS OTHERWISE SPECIFIED:
0 PLC ± –
1 PLC ± –
2 PLC ± 0.36[.015]
3 PLC ± –
4 PLC ± –
ANGLES ± –

MATERIAL △1

FINISH –

DWN L. CASTAGNA 23JUN93
CHK J. HERRINGTON 24JUN93
APVD J. HERRINGTON 24JUN93

PRODUCT SPEC 108-1443
APPLICATION SPEC 114-7010
WEIGHT –

CUSTOMER DRAWING

TE Connectivity

NAME: TERMINATING COVER AMPMODU 50/50 GRID

SIZE	CAGE CODE	DRAWING NO	RESTRICTED TO
A1	00779	C-104891	–

SCALE 10:1 | SHEET 1 OF 1 | REV C2